BS ISO 10711:2012

BSI Standards Publication

Intelligent Transport Systems — Interface Protocol and Message Set Definition between Traffic Signal Controllers and Detectors

NO COPYING WITHOUT BSI PERMISSION EXCEPT AS PERMITTED BY COPYRIGHT LAW

raising standards worldwide™

Full document details: BS ISO 10711:2012

National foreword

This British Standard is the UK implementation of ISO 10711:2012.

The UK participation in its preparation was entrusted to Technical Committee EPL/278, Road transport informatics.

A list of organizations represented on this committee can be obtained on request to its secretary.

This publication does not purport to include all the necessary provisions of a contract. Users are responsible for its correct application.

© The British Standards Institution 2012

ISBN 978 0 580 66614 8

ICS 03.220.01; 35.240.60

Compliance with a British Standard cannot confer immunity from legal obligations.

This British Standard was published under the authority of the Standards Policy and Strategy Committee on 31 January 2012.

Amendments issued since publication

Date	Text affected

Documents
Document Sharing Hub

Full document details: BS ISO 10711:2012

INTERNATIONAL STANDARD

ISO 10711

First edition
2012-01-15

Intelligent Transport Systems — Interface Protocol and Message Set Definition between Traffic Signal Controllers and Detectors

Systèmes intelligents de transport — Protocole d'interface et définition des ensembles de messages entre régulateurs de signaux de circulation et détecteurs

Reference number
ISO 10711:2012(E)

Documents
Document Sharing Hub
© ISO 2012

Full document details: BS ISO 10711:2012

COPYRIGHT PROTECTED DOCUMENT

© ISO 2012

All rights reserved. Unless otherwise specified, no part of this publication may be reproduced or utilized in any form or by any means, electronic or mechanical, including photocopying and microfilm, without permission in writing from either ISO at the address below or ISO's member body in the country of the requester.

ISO copyright office
Case postale 56 • CH-1211 Geneva 20
Tel. + 41 22 749 01 11
Fax + 41 22 749 09 47
E-mail copyright@iso.org
Web www.iso.org

Published in Switzerland

Documents
Document Sharing Hub
© ISO 2012 – All rights reserved

Full document details: BS ISO 10711:2012

Contents

Page

Foreword iv

Introduction v

1 Scope 1

2 Normative references 2

3 Terms and definitions 2

4 Abbreviated terms 2

5 Interface protocol for traffic controller 3
5.1 Relationship to other standards 3
5.2 Identification detector index 3
5.3 Detector classification 4

6 Interface messages for traffic signal controller 5
6.1 General frame structure 5
6.2 Detector information messages structure 7

Annex A (normative) **Interface Protocol Message Set Definition between Traffic Signal Controllers and Detectors data structure and data type definition** 16

Annex B (informative) **Interface Protocol and Message Set Definition between Traffic Signal Controllers and Detectors implementation example** 23

Bibliography 25

© ISO 2012 – All rights reserved

Documents
Document Sharing Hub
Full document details: BS ISO 10711:2012

Foreword

ISO (the International Organization for Standardization) is a worldwide federation of national standards bodies (ISO member bodies). The work of preparing International Standards is normally carried out through ISO technical committees. Each member body interested in a subject for which a technical committee has been established has the right to be represented on that committee. International organizations, governmental and non-governmental, in liaison with ISO, also take part in the work. ISO collaborates closely with the International Electrotechnical Commission (IEC) on all matters of electrotechnical standardization.

International Standards are drafted in accordance with the rules given in the ISO/IEC Directives, Part 2.

The main task of technical committees is to prepare International Standards. Draft International Standards adopted by the technical committees are circulated to the member bodies for voting. Publication as an International Standard requires approval by at least 75 % of the member bodies casting a vote.

Attention is drawn to the possibility that some of the elements of this document may be the subject of patent rights. ISO shall not be held responsible for identifying any or all such patent rights.

ISO 10711 was prepared by Technical Committee ISO/TC 204, *Intelligent transport systems*.

© ISO 2012 – All rights reserved
Documents
Document Sharing Hub
Full document details: BS ISO 10711:2012

Introduction

Real-time traffic signal control systems use traffic detectors to obtain traffic flow information. Each detector has its own method for collecting traffic information. Most popular is the loop detector which reports traffic data through detection of vehicle occupancy. Each method supporting different forms of detection has its own merits and disadvantages and uses a variety of message sets and protocols for communication which complicates their integration into systems.

There are two methods for integrating different types of traffic detectors. One method is to select and/or analyse the necessary information from detectors using their own message sets. The second method is to standardize the message sets and protocols to be used for the interface between detectors and traffic signal controllers. The former has the disadvantage that the signal controller must be customized each time a new detector type is introduced. The latter approach has the advantage of supporting consistent collection of traffic data without consideration of detectors' detection principles and characteristics. Thus, the second method has advantages when the use of the data is known.

This International Standard defines detector message sets applicable to traffic signal control. There are three different message sets according to the detection method: occupancy based; image processing based; and vehicle identification based. All detectors should be assigned to one of these three categories. The message sets do not contain hardware information and additional information that is not critical to the traffic signal control.

Regardless of their physical functions or manufacturing methods, all current traffic detectors can use one of the three types of message sets for communicating with traffic controllers. Using this International Standard, there is no need to include specific manufacturer's technical codes as a part of the data exchange.

This International Standard allows the signal controller to query and change the detector settings for the commonly applicable contents such as attributes identifying the installed location of the detector. For image processing based detectors, this International Standard includes minimal well-known generic camera control commands.

The encoding rules and lower layers of the OSI communications stack[2] (e.g. transport) are left to national standards.

The benefits are

a) all detectors can adopt one of the three types of predefined message sets, thus configuration of traffic detector system for traffic signal control becomes more simple regardless of hardware properties and manufacturing method,

b) it is not necessary to replace or revise traffic signal controller software when a new type of detector is installed and a new detector adopting one of the three message sets will not have communications interoperability problems, as all of the necessary information items for signal control have been considered, and

c) minimizing the communications load achieved with the compact size of predefined information; this advantage can be applicable to short range wireless communication with its weakness in the multi-channel simultaneous communication owing to hand-shaking and frequency interference.

Annex B provides an informative example of how the interface protocol and message sets are implemented.

© ISO 2012 – All rights reserved

Documents
Document Sharing Hub
Full document details: BS ISO 10711:2012

Documents
Document Sharing Hub

Intelligent Transport Systems — Interface Protocol and Message Set Definition between Traffic Signal Controllers and Detectors

1 Scope

This International Standard defines protocols and message sets between traffic detectors and traffic signal controllers. It is applicable to the various types of traffic detector technologies currently in use for real-time traffic signal controls. The scope of this International Standard is limited to parameter generation to be used for traffic signal control and for the interface between traffic signal controllers and detectors.

This International Standard defines message sets that contain data collection and control protocol for three different types of detectors of traffic signal control systems:

— detectors that deal with occupancy information;

— detectors that deal with image information;

— detectors that deal with vehicle identification.

The scope of this International Standard does not include the following cases:

— interfaces between sensors [including tag or on-board units (OBU)] and detector controllers;

— interfaces between traffic signal controllers and centres;

— when signal controllers only relay data from field-side detectors to central computers;

— when signal controllers receive unencoded electrical signals from cable-connected detectors and not data from detectors.

Physical scope is limited to the communication interface between traffic signal controllers and traffic detectors. The scope does not include the interface between the traffic detector and its own controller.

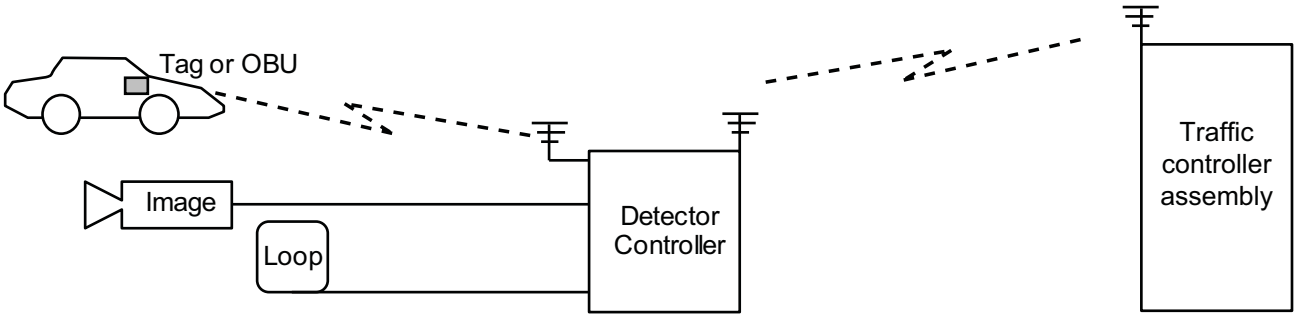

Figure 1 — Physical scope

This International Standard is limited to the definition of the message sets used to exchange detector information relevant for traffic control and the logical rules governing the exchange of these messages.

AVA Documents Document Sharing Hub

© ISO 2012 – All rights reserved

Full document details: BS ISO 10711:2012

2 Normative references

The following referenced documents are indispensable for the application of this document. For dated references, only the edition cited applies. For undated references, the latest edition of the referenced document (including any amendments) applies.

ISO 15784-3:2008, *Intelligent transport systems (ITS) — Data exchange involving roadside modules communication — Part 3: Application profile-data exchange (AP-DATEX)*

ISO 14827-2:2005, *Transport information and control systems — Data interfaces between centres for transport information and control systems — Part 2: DATEX-ASN*

3 Terms and definitions

For the purposes of this document, the terms and definitions given in ISO 15784-3 and the following apply.

3.1
occupancy based detector
detector that detects vehicles and traffic characteristics based on the state of the occupancy using methods such as loop or magnetic detectors

3.2
image processing based detector
detector that detects vehicles based on the real-time image data from the digital camera which has virtual sensing lines for estimating queue length or other parameters in approaching lanes

3.3
vehicle identification based detector
detector that detects vehicle identities based on wireless communication with tags or on-board units (OBU) in the vehicle, which transmits the vehicle's identity information to the traffic signal controller

3.4
detection zone
area on the road surface where the target or the group of targets actuates the detector

NOTE Adapted from DS/ENV 13563.

3.5
detector information type
information type that designates the type of information from linked detectors which can be occupancy based, image processing based or vehicle identification based

3.6
direction discrimination
direction of travel of a target within the detection zone

NOTE Adapted from DS/ENV 13563.

4 Abbreviated terms

For the purposes of this document, the following abbreviated terms apply.

ID	Identifier
IPMSTSCD	Interface Protocol and Message Set Definition between Traffic Signal Controllers and Detectors
MIB	Management Information Base

© ISO 2012 – All rights reserved
Documents
Document Sharing Hub
Full document details: BS ISO 10711:2012

OBU	On-Board Unit
OSI	Open System Interconnection
PDU	Protocol Data Unit
RSE	Roadside Equipment

5 Interface protocol for traffic controller

5.1 Relationship to other standards

For the interface, this International Standard defines for each application the scope of the

1) framework in the protocol stack,
2) object encoding rules, and
3) transportation management protocol.

The interface defined within this International Standard secures interoperability by adopting the lower layer of the protocol stack and specified standards for encoding rules, transport management rules and data structures. The criteria for detector controller and traffic signal controller define the designating method for the detectors.

The information should be exchanged according to the protocol profile defined in ISO 15784-3 and ISO 14827-2.

5.2 Identification detector index

5.2.1 Identification method

A traffic signal controller collects data from each connected detector controller using the message sets defined in this International Standard. Each detector controller reports information about its detectors, with each detector identified by a unique sequential identifier. However, since the traffic signal controller may be connected to multiple detector controllers, the traffic signal controller shall, where required, support a cross-reference table that translates the local detector identifier into an identifier that is unique for the entire scope of the traffic signal operation, as shown in Figure 2.

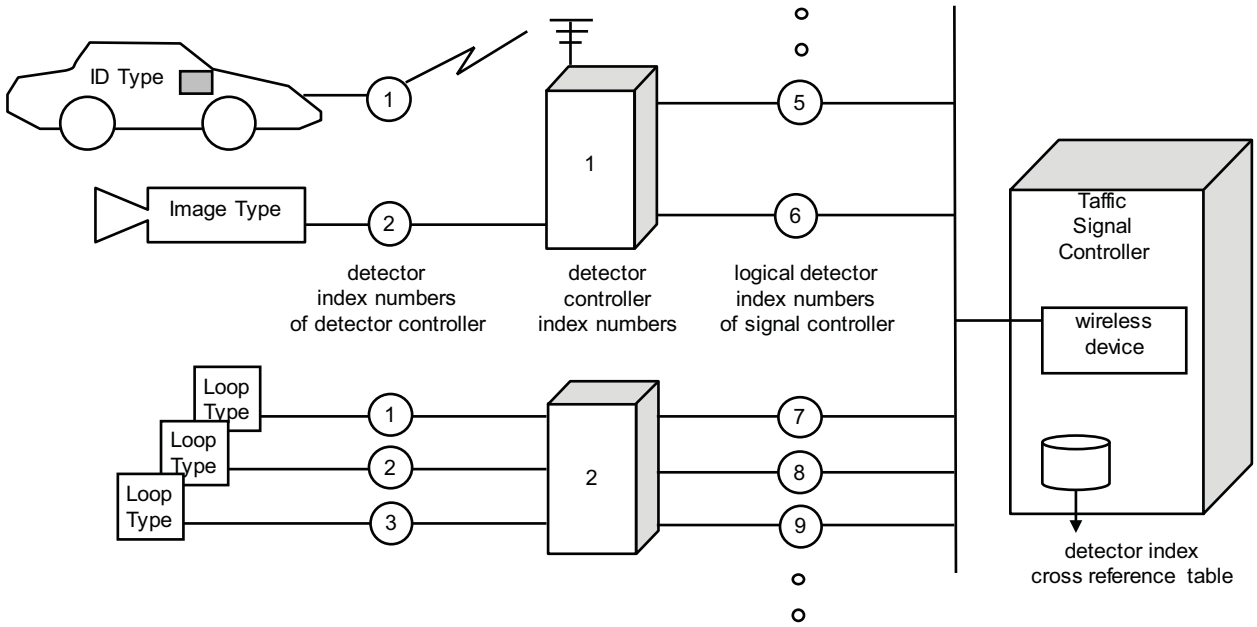

Figure 2 — Detector identification concept (example)

© ISO 2012 – All rights reserved

Documents
Document Sharing Hub
Full document details: BS ISO 10711:2012