BS ISO 10770-2:2012

BSI Standards Publication

Hydraulic fluid power — Electrically modulated hydraulic control valves

Part 2: Test methods for three-port directional flow-control valves

bsi.

...making excellence a habit.™

Document Sharing Hub

National foreword

This British Standard is the UK implementation of ISO 10770-2:2012. It supersedes BS ISO 10770-2:1998 which is withdrawn.

The UK participation in its preparation was entrusted to Technical Committee MCE/18/-/8, Product testing.

A list of organizations represented on this committee can be obtained on request to its secretary.

This publication does not purport to include all the necessary provisions of a contract. Users are responsible for its correct application.

© The British Standards Institution 2012. Published by BSI Standards Limited 2012

ISBN 978 0 580 74182 1

ICS 23.100.50

Compliance with a British Standard cannot confer immunity from legal obligations.

This British Standard was published under the authority of the Standards Policy and Strategy Committee on 31 December 2012.

Amendments issued since publication

Date	Text affected

Documents
Document Sharing Hub

Full document details: BS ISO 10770-2:2012

INTERNATIONAL STANDARD

ISO 10770-2

Second edition
2012-12-01

Hydraulic fluid power — Electrically modulated hydraulic control valves —

Part 2: Test methods for three-port directional flow-control valves

Transmissions hydrauliques — Distributeurs hydrauliques à modulation électrique — Partie 2: Méthodes d'essai pour distributeurs de commande de débit à trois voies

Reference number
ISO 10770-2:2012(E)

Documents
Document Sharing Hub
© ISO 2012

Full document details: BS ISO 10770-2:2012

COPYRIGHT PROTECTED DOCUMENT

© ISO 2012

All rights reserved. Unless otherwise specified, no part of this publication may be reproduced or utilized in any form or by any means, electronic or mechanical, including photocopying and microfilm, without permission in writing from either ISO at the address below or ISO's member body in the country of the requester.

ISO copyright office
Case postale 56 • CH-1211 Geneva 20
Tel. + 41 22 749 01 11
Fax + 41 22 749 09 47
E-mail copyright@iso.org
Web www.iso.org

Published in Switzerland

Documents
Document Sharing Hub
© ISO 2012 – All rights reserved

Full document details: BS ISO 10770-2:2012

Contents

Page

Foreword ... iv

Introduction ... v

1 Scope ... 1

2 Normative references ... 1

3 Terms, definitions, symbols and units ... 1
3.1 Terms and definitions ... 1
3.2 Symbols and units ... 2

4 Standard test conditions ... 3

5 Test installation ... 3

6 Accuracy ... 5
6.1 Instrument accuracy ... 5
6.2 Dynamic range ... 5

7 Electrical tests for valves without integrated electronics ... 5
7.1 General ... 5
7.2 Coil resistance ... 5
7.3 Coil inductance - Optional test ... 5
7.4 Insulation resistance ... 7

8 Performance tests ... 7
8.1 Steady-state tests ... 7
8.2 Dynamic tests ... 21

9 Pressure impulse test ... 28

10 Presentation of results ... 28
10.1 General ... 28
10.2 Test reports ... 29

11 Identification statement (reference to this part of ISO 10770) ... 30

Annex A (informative) **Testing guidance** ... 31

© ISO 2012 – All rights reserved

Documents
Document Sharing Hub
Full document details: BS ISO 10770-2:2012

Foreword

ISO (the International Organization for Standardization) is a worldwide federation of national standards bodies (ISO member bodies). The work of preparing International Standards is normally carried out through ISO technical committees. Each member body interested in a subject for which a technical committee has been established has the right to be represented on that committee. International organizations, governmental and non-governmental, in liaison with ISO, also take part in the work. ISO collaborates closely with the International Electrotechnical Commission (IEC) on all matters of electrotechnical standardization.

International Standards are drafted in accordance with the rules given in the ISO/IEC Directives, Part 2.

The main task of technical committees is to prepare International Standards. Draft International Standards adopted by the technical committees are circulated to the member bodies for voting. Publication as an International Standard requires approval by at least 75 % of the member bodies casting a vote.

Attention is drawn to the possibility that some of the elements of this document may be the subject of patent rights. ISO shall not be held responsible for identifying any or all such patent rights.

ISO 10770-2 was prepared by Technical Committee ISO/TC 131, *Fluid power systems*, Subcommittee SC 8, *Product testing*.

This second edition cancels and replaces the first edition (ISO 10770-2:1998) which has been technically revised.

ISO 10770 consists of the following parts, under the general title *Hydraulic fluid power — Electrically modulated hydraulic control valves*:

— *Part 1: Test methods for four-port directional flow-control valves*

— *Part 2: Test methods for three-port directional flow-control valves*

— *Part 3: Test methods for pressure control valves*

© ISO 2012 – All rights reserved
Documents
Document Sharing Hub
Full document details: BS ISO 10770-2:2012

Introduction

This part of ISO 10770 has been prepared with the intention of improving the uniformity of valve testing and hence the consistency of recorded valve performance data so that this data can be used for system design, regardless of the data source.

© ISO 2012 – All rights reserved

Documents
Document Sharing Hub
Full document details: BS ISO 10770-2:2012

Documents
Document Sharing Hub

Full document details: BS ISO 10770-2:2012

INTERNATIONAL STANDARD ISO 10770-2:2012(E)

Hydraulic fluid power — Electrically modulated hydraulic control valves —

Part 2:
Test methods for three-port directional flow-control valves

1 Scope

This part of ISO 10770 describes methods for determining the performance characteristics of electrically modulated hydraulic three-port directional flow-control valves.

This type of electrohydraulic valve controls the direction and amount of hydraulic flow in a hydraulic system.

2 Normative references

The following referenced documents are indispensable for the application of this document. For dated references, only the edition cited applies. For undated references, the latest edition of the referenced document (including any amendments) applies.

ISO 1219-1, *Fluid power systems and components — Graphical symbols and circuit diagrams — Part 1: Graphical symbols for conventional use and data-processing applications*

ISO 3448, *Industrial liquid lubricants — ISO viscosity classification*

ISO 4406, *Hydraulic fluid power — Fluids — Method for coding the level of contamination by solid particles*

ISO 5598, *Fluid power systems and components — Vocabulary*

ISO 6743-4, *Lubricants, industrial oils and related products (class L) — Classification — Part 4: Family H (Hydraulic systems)*

ISO 9110-1:1990, *Hydraulic fluid power — Measurement techniques — Part 1: General measurement principles*

ISO 10771-1, *Hydraulic fluid power — Fatigue pressure testing of metal pressure-containing envelopes — Part 1: Test method*

IEC 60617-DB-12M, G*raphical symbols for diagrams*

3 Terms, definitions, symbols and units

3.1 Terms and definitions

For the purposes of this document, the terms and definitions given in ISO 5598 and the following apply.

3.1.1
electrically modulated hydraulic directional flow control valve
valve that provides a degree of proportional flow control in response to a continuously variable electrical input signal

NOTE The flow direction can be changed by the input signal.

3.1.2
input signal deadband
portion of input signal that does not produce a controlled flow

© ISO 2012 – All rights reserved

Documents
Document Sharing Hub
Full document details: BS ISO 10770-2:2012

3.1.3
threshold
change of input signal required to produce a reversal in continuous control valve output

NOTE The threshold is expressed as a percentage of rated input signal.

3.1.4
rated input signal
signal defined by the manufacturer to achieve rated output

3.2 Symbols and units

For the purposes of this document, the symbols given in Table 1 apply.

The graphical symbols in this document conform to ISO 1219-1 and IEC 60617-DB-12M.

Table 1 — Symbols and units

Parameter	Symbol	Unit
Inductance	L_c	H
Insulation resistance	R_i	Ω
Insulation test current	I_i	A
Insulation test voltage	U_i	V
Resistance	R_c	Ω
Dither amplitude	—	% (of max. input signal)
Dither frequency	—	Hz
Input signal	I, or U	A, or V
Rated input signal	I_n or U_n	A, or V
Output flow	q	l/min
Rated flow	q_n	l/min
Flow gain	$K_v = (\Delta q/\Delta I)$ or $K_v = (\Delta q/\Delta U)$	l/min/A l/min/V
Hysteresis	—	% (of max. output signal)
Internal leakage	q_l	l/min
Supply pressure	p_P	MPa (bar)
Return pressure	p_T	MPa (bar)
Load pressure	p_A	MPa (bar)
Valve pressure drop	$p_v = p_P - p_A$ or $p_v = p_A - p_T$	MPa (bar)
Rated valve pressure drop	p_N	MPa (bar)
Pressure gain	$K_p = (\Delta p_L/\Delta I)$ or $K_p = (\Delta p_L/\Delta U)$	MPa (bar)/A MPa (bar)/V
Threshold	—	% (of max. input signal)
Amplitude (ratio)	—	dB
Phase lag	—	°
Temperature	—	°C
Frequency	f	Hz
Time	t	s

© ISO 2012 – All rights reserved
Documents
Document Sharing Hub
Full document details: BS ISO 10770-2:2012

Table 1 *(continued)*

Parameter	Symbol	Unit
Time constant	t_c	s
Linearity error	Q_{err}	l/min

4 Standard test conditions

Unless otherwise specified, tests shall be carried out using the standard test conditions given in Table 2.

Table 2 — Standard test conditions

Parameter	Condition
Ambient temperature	20°C ± 5°C
Fluid cleanliness	Solid contaminant code number shall be stated in accordance with ISO 4406
Fluid type	Commercially available mineral based hydraulic fluid, (i.e. L-HL in accordance with ISO 6743-4 or other fluid with which the valve is able to operate)
Fluid viscosity	(32 ± 8) cSt at valve inlet
Viscosity grade	Grade VG 32 or VG 46 in accordance with ISO 3448
Pressure drop	Test requirement ± 2,0 %
Return pressure	Shall conform to the manufacturer's recommendations

5 Test installation

A test installation conforming to the requirements of either Figure 1, 10 or 11 shall be used for testing all valves.

SAFETY PRECAUTIONS — It is essential that consideration is given to the safety of personnel and equipment during the tests.

Figures 1, 10 and 11 show the minimum items required to carry out the tests without any safety devices to protect against damage in the event of component failure. For tests using the circuits shown in Figures 1, 10 and 11, the following apply.

a) Guidance on carrying out the tests is given in Annex A.

b) A separate circuit may be constructed for each type of test. This can improve the accuracy of test results as it eliminates the possibility of leakage through the shut off valves.

c) Hydraulic performance tests are carried out on a combination of valve and amplifier. Input signals are applied to the amplifier and not directly to the valve. For electrical tests the signals are applied directly to the valve.

d) If possible, hydraulic tests should be conducted using an amplifier recommended by the valve manufacturer. If not, the type of amplifier used should be recorded, with the operating details (i.e. pulse width modulation frequency, dither frequency and amplitude).

e) The amplifier supply voltage, and magnitude and sign of the voltage applied to the valve during the on and off periods of the pulse width modulation, should be recorded.

f) Electronic test equipment and transducers should have a bandwidth or natural frequency at least 10 times greater than the maximum test frequency.

g) Pressure transducers 6 to 8 in Figures 1 and 10 may be replaced by a differential pressure transducer for each flow path under test.

© ISO 2012 – All rights reserved

Documents
Document Sharing Hub
Full document details: BS ISO 10770-2:2012

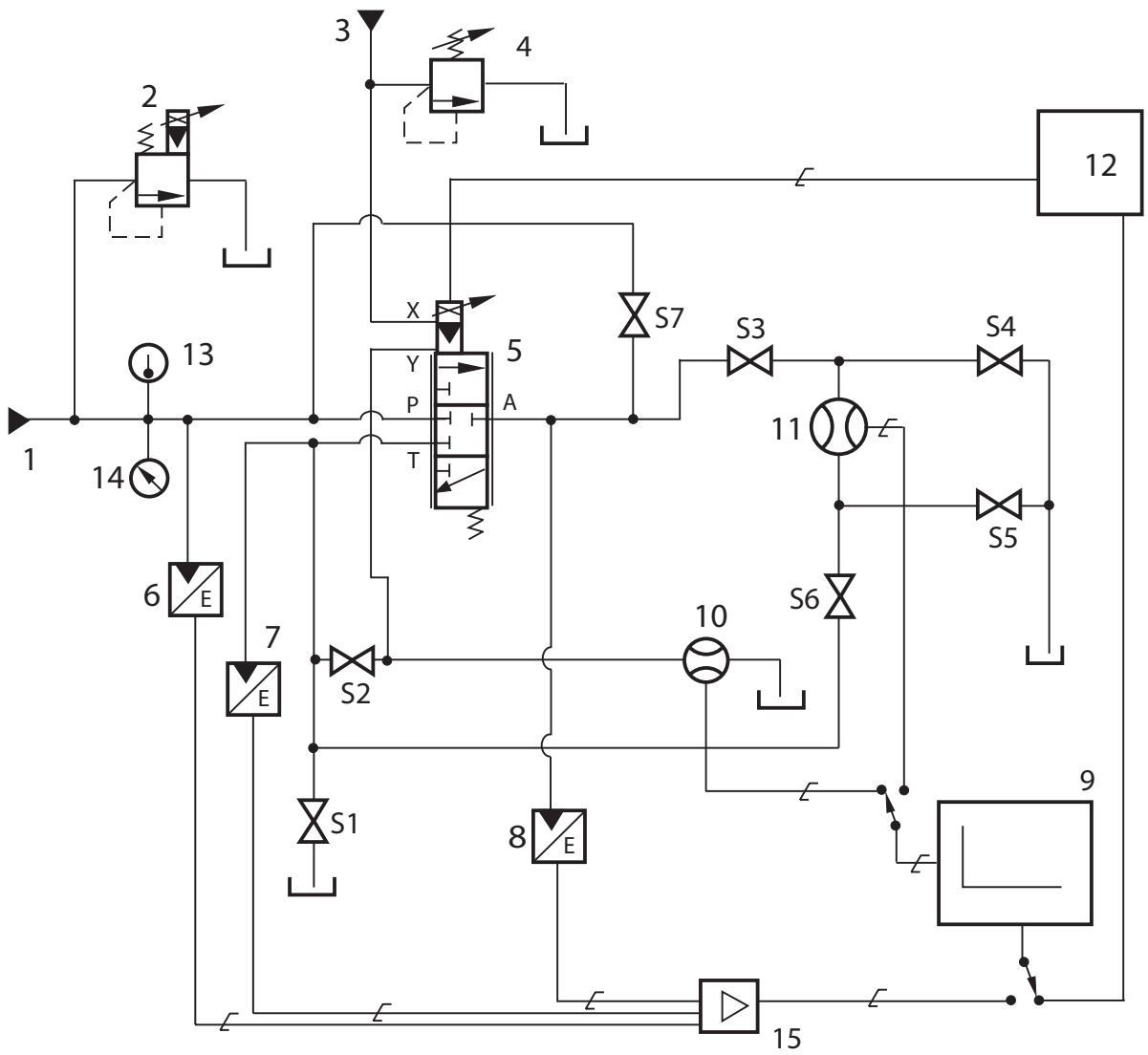

Key

1	main flow source	13	temperature indicator
2	main relief valve	14	pressure gauge
3	external pilot flow source	15	signal conditioner
4	external pilot relief valve	S1 to S7	shut off valves
5	unit under test	A	working port
6 to 8	pressure transducers	P	supply port
9	data acquisition	T	return port
10, 11	flow transducer	X	pilot supply port
12	signal generator	Y	pilot drain port

Figure 1 — Test circuit

© ISO 2012 – All rights reserved
Documents
Document Sharing Hub
Full document details: BS ISO 10770-2:2012

6 Accuracy

6.1 Instrument accuracy

Instrumentation shall be accurate to within the limits shown in Class B of ISO 9110-1:1990:

a) electrical resistance: ± 2 % of the actual measurement;

b) pressure: ± 1 % of the valve's rated pressure drop to achieve rated flow;

c) temperature: ± 2 % of the ambient temperature;

d) flow: ± 2,5 % of the valve's rated flow;

e) input signal: ± 1,5 % of the electrical input signal required to achieve the rated flow.

6.2 Dynamic range

For the dynamic tests, ensure that the measuring equipment, amplifiers and recording devices do not generate any damping, attenuation or phase shift of the output signal being recorded that would affect the measured value by more than 1 % of the measured value.

7 Electrical tests for valves without integrated electronics

7.1 General

As appropriate, perform the tests described in 7.2 to 7.4 on all valves without integrated electronics before proceeding to subsequent tests.

NOTE Tests 7.2 to 7.4 only apply to current-driven valves.

7.2 Coil resistance

7.2.1 Coil resistance (cold)

Carry out the test as follows.

a) Soak the complete un-energized valve at the specified ambient temperature for at least 2 h.

b) Measure and record the electrical resistance between the two leads or terminals of each coil in the valve.

7.2.2 Coil resistance (hot)

Carry out the test as follows.

a) Soak the complete energized valve, mounted on a subplate recommended by the manufacturer, at its maximum rated temperature and operate the complete valve, fully energized and without flow, until the coil temperature stabilizes.

b) Measure and record the electrical resistance between the two leads or terminals of each coil in the valve. The resistance value shall be measured within 1 s of removing the supply voltage.

7.3 Coil inductance - Optional test

This test method shall not be taken to determine a definitive value of Inductance. The value obtained shall be used for comparison purposes only.

© ISO 2012 – All rights reserved

Documents
Document Sharing Hub
Full document details: BS ISO 10770-2:2012