BS ISO 10791-6:2014

BSI Standards Publication

Test conditions for machining centres

Part 6: Accuracy of speeds and interpolations

bsi.

...making excellence a habit.™

Document Sharing Hub

Full document details: BS ISO 10791-6:2014

National foreword

This British Standard is the UK implementation of ISO 10791-6:2014. It supersedes BS ISO 10791-6:1998 which is withdrawn.

The UK participation in its preparation was entrusted to Technical Committee MTE/1/2, Machine tools - Accuracy.

A list of organizations represented on this committee can be obtained on request to its secretary.

This publication does not purport to include all the necessary provisions of a contract. Users are responsible for its correct application.

© The British Standards Institution 2015. Published by BSI Standards Limited 2015

ISBN 978 0 580 68295 7

ICS 25.040.10

Compliance with a British Standard cannot confer immunity from legal obligations.

This British Standard was published under the authority of the Standards Policy and Strategy Committee on 31 January 2015.

Amendments issued since publication

Date	Text affected

Documents
Document Sharing Hub

Full document details: BS ISO 10791-6:2014

INTERNATIONAL STANDARD

ISO 10791-6

Second edition
2014-12-15

Test conditions for machining centres —

Part 6: Accuracy of speeds and interpolations

Conditions d'essai pour centres d'usinage —

Partie 6: Précision des vitesses et interpolations

Reference number
ISO 10791-6:2014(E)

Documents
Document Sharing Hub

© ISO 2014

Full document details: BS ISO 10791-6:2014

COPYRIGHT PROTECTED DOCUMENT

© ISO 2014

All rights reserved. Unless otherwise specified, no part of this publication may be reproduced or utilized otherwise in any form or by any means, electronic or mechanical, including photocopying, or posting on the internet or an intranet, without prior written permission. Permission can be requested from either ISO at the address below or ISO's member body in the country of the requester.

ISO copyright office
Case postale 56 • CH-1211 Geneva 20
Tel. + 41 22 749 01 11
Fax + 41 22 749 09 47
E-mail copyright@iso.org
Web www.iso.org

Published in Switzerland

© ISO 2014 – All rights reserved

Documents
Document Sharing Hub

Full document details: BS ISO 10791-6:2014

Contents

Page

Foreword ... **iv**
Introduction ... **v**
1 Scope ... **1**
2 Normative references ... **1**
3 Terms and definitions ... **1**
4 Preliminary remarks ... **2**
4.1 Measurement units ... 2
4.2 Reference to ISO 230-1 and ISO 230-4 ... 2
4.3 Testing sequence ... 2
4.4 Tests to be performed ... 2
4.5 Measuring instruments ... 2
4.6 Diagrams ... 2
4.7 Position of axes not under test ... 2
4.8 Software compensation ... 3
5 Kinematic tests ... **3**
5.1 General ... 3
5.1.1 Tests described in Annexes A to C ... 3
5.1.2 Alternative tests in Annexes A and C ... 3
5.2 Spindle speeds and feed speeds ... 4
5.3 Linear interpolation motion ... 7
5.4 Circular interpolation motion ... 9
Annex A (normative) **Kinematic tests for machines with two rotary axes in the spindle head** ... **11**
Annex B (normative) **Kinematic tests for machines with two rotary axes in the workpiece side** ... **23**
Annex C (normative) **Kinematic tests for machines with a swivel head and/or a rotary table** ... **34**
Annex D (informative) **Precautions for test setup for Annexes A to C** ... **44**
Bibliography ... **50**

© ISO 2014 – All rights reserved

Documents
Document Sharing Hub
Full document details: BS ISO 10791-6:2014

Foreword

ISO (the International Organization for Standardization) is a worldwide federation of national standards bodies (ISO member bodies). The work of preparing International Standards is normally carried out through ISO technical committees. Each member body interested in a subject for which a technical committee has been established has the right to be represented on that committee. International organizations, governmental and non-governmental, in liaison with ISO, also take part in the work. ISO collaborates closely with the International Electrotechnical Commission (IEC) on all matters of electrotechnical standardization.

The procedures used to develop this document and those intended for its further maintenance are described in the ISO/IEC Directives, Part 1. In particular the different approval criteria needed for the different types of ISO documents should be noted. This document was drafted in accordance with the editorial rules of the ISO/IEC Directives, Part 2 (see www.iso.org/directives).

Attention is drawn to the possibility that some of the elements of this document may be the subject of patent rights. ISO shall not be held responsible for identifying any or all such patent rights. Details of any patent rights identified during the development of the document will be in the Introduction and/or on the ISO list of patent declarations received (see www.iso.org/patents).

Any trade name used in this document is information given for the convenience of users and does not constitute an endorsement.

For an explanation on the meaning of ISO specific terms and expressions related to conformity assessment, as well as information about ISO's adherence to the WTO principles in the Technical Barriers to Trade (TBT) see the following URL: Foreword - Supplementary information

The committee responsible for this document is ISO/TC 39, *Machine tools*, Subcommittee SC 2, *Test conditions for metal cutting machine tools*.

This second edition cancels and replaces the first edition (ISO 10791-6:1998), which has been technically revised. It also incorporates Technical Corrigendum ISO 10791-6:1998/Cor 1:2004.

ISO 10791 consists of the following parts, under the general title *Test conditions for machining centres*:

— *Part 1: Geometric tests for machines with horizontal spindle (horizontal Z-axis)*

— *Part 2: Geometric tests for machines with vertical spindle or universal heads with vertical primary rotary axis (vertical Z-axis)*

— *Part 3: Geometric tests for machines with integral indexable or continuous universal heads (vertical Z-axis)*

— *Part 4: Accuracy and repeatability of positioning of linear and rotary axes*

— *Part 5: Accuracy and repeatability of positioning of work-holding pallets*

— *Part 6: Accuracy of speeds and interpolations*

— *Part 7: Accuracy of finished test pieces*

— *Part 8: Evaluation of contouring performance in the three coordinate planes*

— *Part 9: Evaluation of the operating times of tool change and pallet change*

— *Part 10: Evaluation of thermal distortions*

© ISO 2014 – All rights reserved
Documents
Document Sharing Hub
Full document details: BS ISO 10791-6:2014

Introduction

ISO 10791 is concerned with methods of testing machining centres.

A machining centre is a numerically controlled machine tool capable of performing multiple machining operations, including milling, boring, and tapping, as well as automatic tool changing from a magazine or similar storage unit in accordance with a machining programme.

The object of ISO 10791 is to supply information as wide and comprehensive as possible on tests which can be carried out for comparison, acceptance, maintenance, or any other purpose deemed necessary by the user or the manufacturer.

ISO 10791 specifies, with reference to the relevant parts of ISO 230, several families of tests for machining centres. ISO 10791 also establishes the tolerances or maximum acceptable values for the test results corresponding to general purpose and normal accuracy machining centres.

ISO 10791 is also applicable, totally or partially, to numerically controlled milling and boring machines, when their configuration, components, and movements are compatible with the tests described herein.

In five-axis machining centres having three orthogonal linear axes and two rotary axes, there are such types as machines with two rotary axes in the spindle head (see Annex A), machines with two rotary axes in the workpiece side (see Annex B), and machines with a swivel head and/or a rotary table (see Annex C).

The annexes of this part of ISO 10791 specify the kinematic tests for five-axis machining centres.

© ISO 2014 – All rights reserved

Documents
Document Sharing Hub
Full document details: BS ISO 10791-6:2014

Documents
Document Sharing Hub

INTERNATIONAL STANDARD ISO 10791-6:2014(E)

Test conditions for machining centres —

Part 6: Accuracy of speeds and interpolations

1 Scope

This part of ISO 10791 specifies, with reference to ISO 230-1 and ISO 230-4, certain kinematic tests for machining centres, concerning spindle speeds, feed and the accuracy of the paths described by the simultaneous movement of two or more numerically controlled (NC) linear and/or rotary axes.

This part of ISO 10791 applies to machining centres having three linear axes (X, Y, and Z) and additionally one or two rotary axes (A, B, or C). Movements other than those mentioned are considered as special features and the relevant tests are not included in this part of ISO 10791.

This part of ISO 10791 deals only with the verification of kinematic accuracy of the machine and does not apply to the testing of the machine operation, e.g. vibrations, abnormal noises, etc., which should generally be checked separately.

The tests described in this part of ISO 10791 are also applicable, totally or partially, subject to specific agreement between the manufacturer/supplier and the user, to numerically controlled milling and boring machines, when their configuration, components, and movements are compatible with the tests described herein.

2 Normative references

The following documents, in whole or in part, are normatively referenced in this document and are indispensable for its application. For dated references, only the edition cited applies. For undated references, the latest edition of the referenced document (including any amendments) applies.

ISO 230-1:2012, *Test code for machine tools — Part 1: Geometric accuracy of machines operating under no-load or quasi-static conditions*

ISO 230-4:2005, *Test code for machine tools — Part 4: Circular tests for numerically controlled machine tools*

ISO 230-7, *Machine tools — Test code for machine tools — Part 7: Geometric accuracy of axes of rotation*

ISO 841:2001, *Industrial automation systems and integration — Numerical control of machines — Coordinate system and motion nomenclature*

3 Terms and definitions

For the purposes of this document, the terms and definitions given in ISO 230-1, ISO 230-4, ISO 230-7, and ISO 841 and the following apply.

3.1
linear interpolation
interpolation where relative motion between the tool side and the workpiece side of the machine tool is a straight line obtained by controlling multiple axes simultaneously

3.2
circular interpolation
interpolation where relative motion between the tool side and the workpiece side of the machine tool is a circular arc in a specific plane obtained by controlling multiple axes simultaneously

AVA Documents
Document Sharing Hub

© ISO 2014 – All rights reserved

Full document details: BS ISO 10791-6:2014

3.3
tool centre point control function
TCP control function
advanced CNC control function that drives the linear axes of a numerically controlled machine tool, in order to maintain constant tool centre point coordinates, in the workpiece coordinate system, in response to instantaneous position variation of rotary axes

4 Preliminary remarks

4.1 Measurement units

In this part of ISO 10791, all linear dimensions, deviations, and corresponding tolerances are expressed in millimetres. Angular dimensions are expressed in degrees. In some cases microradians or arcseconds may be used for clarification purposes. The equivalence of the following expressions should always be kept in mind:

$$0{,}010/1\,000 = 10\times10^{-6} = 10\ \mu\text{rad} \cong 2''$$

4.2 Reference to ISO 230-1 and ISO 230-4

To apply this part of ISO 10791, reference shall be made to ISO 230-1, especially for the installation of the machine before testing, warming up of the spindle and other moving components, description of measuring methods, and recommended accuracy of testing equipment. For tests of circular interpolation motion, reference shall be made to ISO 230-4.

4.3 Testing sequence

The sequence in which the tests are presented in this part of ISO 10791 in no way defines the practical order of testing. In order to make the mounting of instruments or gauging easier, tests can be performed in any order.

4.4 Tests to be performed

When testing a machine, it is not always necessary or possible to carry out all the tests described in this part of ISO 10791. When the tests are required for acceptance purposes, it is up to the user to choose, in agreement with the manufacturer/supplier, those tests relating to the components and/or the properties of the machine which are of interest. These tests shall be clearly stated when ordering a machine. The mere reference to this part of ISO 10791 for the acceptance tests, without specifying the tests to be carried out, and without agreement on the relevant expenses, cannot be considered as binding for any contracting party.

4.5 Measuring instruments

The measuring instruments indicated in the tests described in Clause 5 and in Annex A, Annex B, and Annex C are examples only. Other instruments measuring the same quantities and having the same or smaller measurement uncertainty can be used.

In each test, the number of sampled points (or sampling frequency) shall be reported.

4.6 Diagrams

For simplicity, the diagrams in this part of ISO 10791 illustrate only one type of machines in each Annex.

4.7 Position of axes not under test

Linear and/or rotary axes not under test should be located nearest to the middle of their working travel, or in the position that minimizes deflections of the machine components affecting the measurement.

© ISO 2014 – All rights reserved
AVA Documents Document Sharing Hub
Full document details: BS ISO 10791-6:2014

4.8 Software compensation

When built-in software facilities are available for compensating geometric, positioning, contouring, and thermal deviations, their use during these tests for acceptance purposes shall be based on agreement between the manufacturer/supplier and the user, with due consideration to the machine tool's intended use. When the software compensation is used, this shall be stated in the test report.

It shall be noted that when software compensation is used, axes cannot be locked for test purposes.

5 Kinematic tests

5.1 General

The scope of spindle speed tests (K1) and feed speed tests (K2) is to check the overall accuracy of all the electric, electronic, and kinematic chain in the control system between the command and the physical movement of the component.

The purpose of linear interpolation motion tests (K3) is to check the coordinated motion of two linear axes in either of the following two conditions:

— while these axes are moving either at the same speed (45°); or

— while one of these axes is moving at a significantly lower speed than the other (small angles).

The purpose of circular interpolation motion tests (K4) is to check the coordinated motion of two linear axes along a circular path, including points in which the motion of one axis slows down to zero and the direction of movement is reversed. During these tests, axes move with variable speeds.

The tests for checking circular interpolation involving more than two linear axes, including rotary axes, are described in Annex A, Annex B, and Annex C.

5.1.1 Tests described in Annexes A to C

In Annex A, AK1 measures the deviations of the tool centre point trajectory with the rotation of the B-axis. AK2 measures them with the rotation of the C-axis. AK3 and AK4 measure them with the simultaneous interpolation with both B- and C-axes. Similarly, in all of Annexes A to C, each test describes a test for each rotary axis or the combination of two rotary axes.

5.1.2 Alternative tests in Annexes A and C

In Annex A, AK1, AK2, and AK4 measure the deviations of the tool centre point trajectory in the workpiece coordinate system (the coordinate system attached to the work table). On the other hand, their alternative tests [AK1 (alternative), AK2 (alternative), and AK4 (alternative)] measure them in radial, parallel, and tangential directions of the rotary axis of interest. In other words, these alternative tests measure the deviations in the coordinate system attached to the rotary axis of interest. Tests CK1 and CK1 (alternative) follow the same principle.

© ISO 2014 – All rights reserved

Documents
Document Sharing Hub
Full document details: BS ISO 10791-6:2014

5.2 Spindle speeds and feed speeds

Object and test conditions	**K1**

Checking the deviations in the spindle speed at the midpoint and at the maximum of each speed range for clockwise and counter-clockwise (anticlockwise) directions of rotation. This test shall be carried out for each speed range, where applicable.

Diagram

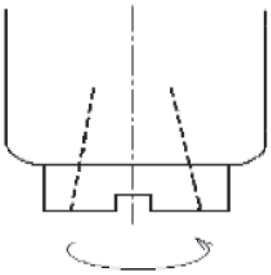

Tolerance

±5 %

Measured deviations

Speed range		**Direction of rotation**	**Programmed speed**	**Measured speed**	**Deviation** %
	Mid	counter-clockwise			
		clockwise			
	Max	counter-clockwise			
		clockwise			
	Mid	counter-clockwise			
		clockwise			
	Max	counter-clockwise			
		clockwise			

Measuring instruments

Revolutions counter or stroboscope or others.

Observations

A dummy tool can be clamped in the spindle.

If the instantaneous speed is read, five readings shall be taken and the average calculated. Readings shall be taken at constant speed, avoiding the acceleration/deceleration at start and stop. The override control shall be set at 100 %.

The spindle speed deviation shall be calculated using the following formula:

$$D = \frac{A_s - P_s}{P_s} \times 100$$

where

D is the deviation in percentage;

A_s is the measured speed;

P_s is the programmed speed.

© ISO 2014 – All rights reserved
Documents
Document Sharing Hub
Full document details: BS ISO 10791-6:2014

Object and test conditions	**K2**

Checking the accuracy of the speed in the positive and negative directions of all the linear axes at the following speeds:

a) 100 mm/min; b) 1 000 mm/min; c) maximum feed speed; d) rapid traverse.

Diagram

The diagram shows setups for a horizontal machining centre. The setups shall be accordingly for vertical machining centres.

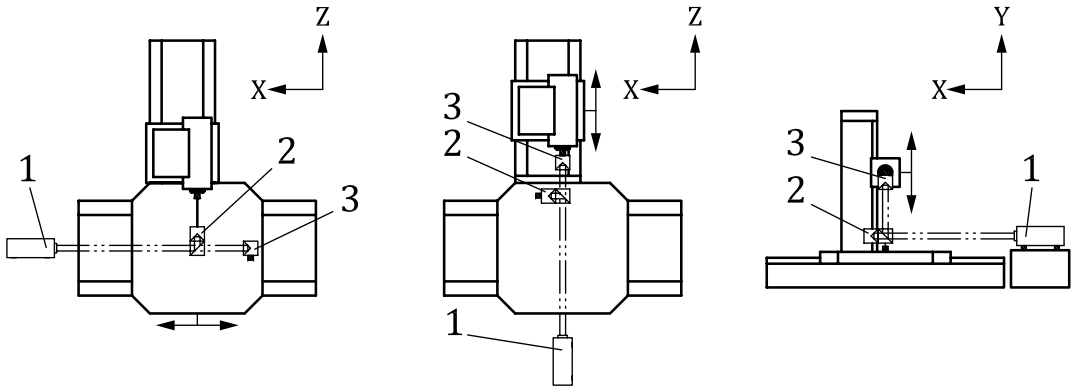

X-axis setup Z-axis setup Y-axis setup

Key

1 laser head

2 interferometer

3 reflector

Tolerance

±5 %

Measured deviations

Programmed feed speed	**Direction**	**Axis**					
		X		**Y**		**Z**	
		Measured avg feed speed	**Deviation** %	**Measured avg feed speed**	**Deviation** %	**Measured avg feed speed**	**Deviation** %
a) 100 mm/min	Positive						
	Negative						
b) 1 000 mm/min	Positive						
	Negative						
c) Max. feed speed ....mm/min	Positive						
	Negative						
d) Rapid traverse ....mm/min	Positive						
	Negative						

Measuring instruments

Laser interferometer.

© ISO 2014 – All rights reserved

Documents
Document Sharing Hub
Full document details: BS ISO 10791-6:2014

Observations

Align the laser interferometer (setup for positioning deviation) with the motion of the axis under test. Axis shall be commanded to execute a simple motion between two end points specified. Travel distance of about half the axis travel range (or 500 mm whichever is shorter) to allow the axis to accelerate, then move at constant speed, and then to decelerate to stop shall be selected. Same travel distance shall be used for all feed speeds. The tests shall be carried out for both directions of travel (positive and negative). Speed data should be sampled with a minimum frequency of 100 Hz, no smoothing or averaging shall be allowed. The override control shall be set at 100 %. For each direction, calculate the average feed speed as the average of all measured constant feed speed values (minimum 1 000 sampled points) for a given test.

The feed speed deviations shall be calculated using the following formula:

$$D_f = \frac{A_f - P_f}{P_f} \times 100$$

where

D_f is the deviation in percentage;

A_f is the measured average feed speed;

P_f is the programmed feed speed.

© ISO 2014 – All rights reserved
Documents
Document Sharing Hub
Full document details: BS ISO 10791-6:2014

5.3 Linear interpolation motion

Object and test conditions	**K3**

Checking the straightness error of the path described by linear interpolation of two linear axes controlled simultaneously over any measuring length of 100 mm. The approximate slopes of these paths are given below.

Horizontal machining centres:

a) dZ/dX = 0,05; b) dZ/dX = 1; c) dX/dZ = 0,05; d) dY/dZ = 1; e) dZ/dY = 0,05; f) dY/dX = 0,05; g) dY/dX = 1.

Vertical machining centres:

a) dY/dX = 0,05; b) dY/dX = 1; c) dX/dY = 0,05; d) dZ/dY = 1; e) dZ/dY = 0,05; f) dZ/dX = 0,05; g) dZ/dX = 1.

Instead of an angle equal to arctan(0,05) [= 2°51’45”], an angle of 3° can be chosen, depending on the programming facilities.

Diagram

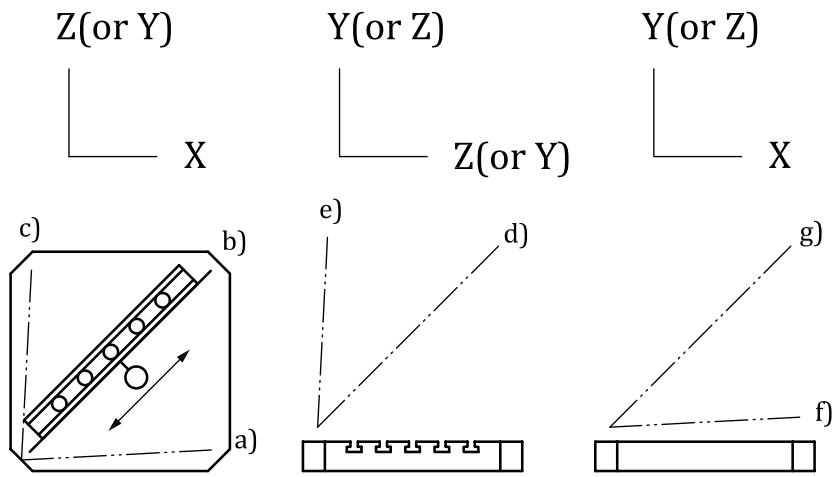

Horizontal plane | Vertical YZ plane | Vertical plane parallel to X-axis

NOTE In the coordinate system shown on each diagram, axis names correspond to the horizontal machine configuration, while those in parentheses [e.g. (or Y)] correspond to the vertical machine configuration.

Tolerance

0,020 for any length of 100

Measured deviations

	a)	b)	c)	d)	e)	f)	g)
Measured error							
Length							

Measuring instruments

Straightness reference artefact with appropriate support (e.g. swivelling vise) or sine bar and linear-displacement sensor[a].

[a] The use of a linear-displacement sensor connected with a graphic recorder or a computer is recommended in order to have a measurement result in a graphical form, which is easier to read.

© ISO 2014 – All rights reserved

Documents
Document Sharing Hub
Full document details: BS ISO 10791-6:2014

Object and test conditions	**K3**
Observations The measuring length shall be approximately in the middle of the work zone. After choosing the angle and the length of travel, place a linear-displacement sensor on the tool holding spindle, if it can be locked, otherwise on the spindle head, reasonably perpendicular to the direction of movement. Place the straightedge or the sine bar on the worktable at the approximate orientation specified in object and test conditions. Move the sensor against the straightedge to read against the reference surface (at the starting position of the measuring length). Record the X-, Y-, Z-positions. Then move the sensor to the end point of the measuring length and adjust the position such that the same linear-displacement sensor reading is obtained against the reference surface of the straightedge. Record the X-, Y-, Z-positions of this location. The programmed path shall be between these two recorded locations. Then move the axes along the programmed path in both directions, with feed speed of 250 mm/min, reversing the direction outside the measuring length, and record the difference between the maximum and the minimum reading separately for each direction. The largest deviation in any 100 mm section and its direction shall be recorded.	
[a] The use of a linear-displacement sensor connected with a graphic recorder or a computer is recommended in order to have a measurement result in a graphical form, which is easier to read.	

© ISO 2014 – All rights reserved
Documents
Document Sharing Hub
Full document details: BS ISO 10791-6:2014

5.4 Circular interpolation motion

Object and test conditions	**K4**

Checking the circular deviation G and the bi-directional circular deviation $G(b)$ of the path generated by circular interpolation of two linear axes over 360°, where applicable, according to ISO 230-4, at one of the following diameters and at two feed speeds, as follows.

1) 20 mm dia.	2) 50 mm dia.	3) 100 mm dia.	4) 200 mm dia.	5) 300 mm dia.
a) 150 mm/min	a) 250 mm/min	a) 350 mm/min	a) 500 mm/min	a) 610 mm/min
b) 630 mm/min	b) 1 000 mm/min	b) 1 400 mm/min	b) 2 000 mm/min	b) 2 440 mm/min

The circular deviation G shall be checked for clockwise and counter-clockwise (anticlockwise) contouring motion.

This test shall be performed in the XY, YZ, and ZX plane, or in the plane composed by other pairs of linear axes (U, V, W, etc.).

Diagram

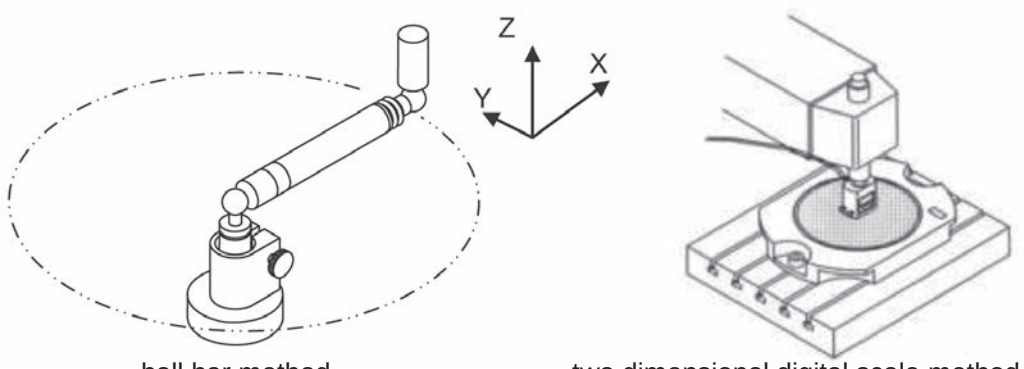

ball bar method — two dimensional digital scale method

NOTE In the coordinate system shown on each diagram, axis names correspond to the horizontal machine configuration, while those in parentheses [e.g. (or Y)] correspond to the vertical machine configuration.

Tolerance

a) G_{ab} = 0,03 mm, G_{ba} = 0,03 mm

$G(b)_{ab}$ = 0,05 mm

b) G_{ab} = 0,05 mm, G_{ba} = 0,05 mm

$G(b)_{ab}$ = 0,09 mm

where ab = XY, YZ, ZX or any pairs of linear axes.

Measured deviations and parameters to be stated

a) feed speed =	Diameter of nominal path Location of measuring instrument	.....
G_{ab} =	— Centre of circle (X/Y/Z)	.....
G_{ba} =	— Offset of tool reference (X/Y/Z)	.....
$G(b)_{ab}$ =	— Offset to workpiece reference (X/Y/Z)	.....
b) feed speed =	Data acquisition parameters	
G_{ab} =	— Starting point	.....
G_{ba} =	— Number of measuring points	.....
$G(b)_{ab}$ =	— Data smoothing process	.....
where ab = XY, YZ, or ZX or any pairs of linear axes	Compensation used Positions of axes not under test	....

Measuring instruments

Ball bar, or two-dimensional digital scale.

© ISO 2014 – All rights reserved

Documents
Document Sharing Hub
Full document details: BS ISO 10791-6:2014

Observations and references to ISO 230-1:2012, 11.3 **and** ISO 230-4:2005
Diameters can differ from the above values in agreement between the manufacturer/supplier and the user. In such cases, the feed speed shall be adjusted according to Annex C of ISO 230-4:2005.
Start the interpolation in one of the four quadrants. Ideally measurements should be recorded at a start point other than one of the four reversal points and should have adequate feed in/out motion around the area being inspected; this helps ensure accurate capture of machine performance measurements, including that at the reversal points.

© ISO 2014 – All rights reserved
Documents
Document Sharing Hub
Full document details: BS ISO 10791-6:2014

Annex A
(normative)

Kinematic tests for machines with two rotary axes in the spindle head

A.1 Machine configuration and designation

The machines specified in this part of ISO 10791 can be classified based on the structure of the linear axes and the rotary axes. The structural configuration is described by using the structural codes to serially connect the motion axis from the workpiece side to the tool side, and *vice versa*. The name of axes of motion is in accordance with ISO 841:2001. As an example, the structural code of the machine shown in Figure A.1 can be described as [w X' b Y Z C B (C1) t] by connecting the motion axes from the workpiece side to the tool side. In this description, the workpiece side and the tool side are distinguished by naming the workpiece by "w", the tool by "t", and the bed by "b"; (C1) stands for the spindle axis without numerical control for angular positioning.

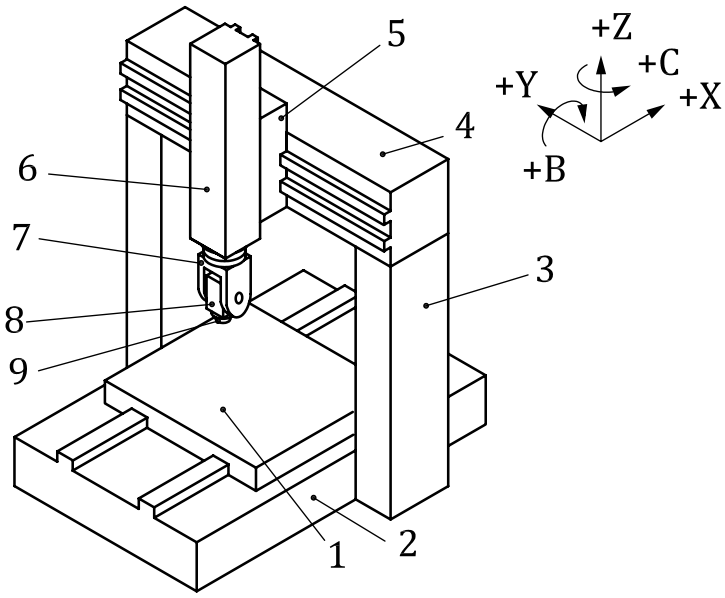

Key

1 table (X'-axis)
2 bed
3 column
4 cross beam
5 ram saddle (Y-axis)
6 ram (Z-axis)
7 swivelling head (C-axis)
8 tilting head (B-axis)
9 spindle [(C1)-axis]

Figure A.1 — Typical example of a vertical five-axis machining centre with two rotary axes in the spindle head [w X' b Y Z C B (C1) t]

© ISO 2014 – All rights reserved

Documents
Document Sharing Hub
Full document details: BS ISO 10791-6:2014