BS ISO 10791-7:2020

BSI Standards Publication

Test conditions for machining centres

Part 7: Accuracy of finished test pieces

Documents
Document Sharing Hub

Full document details: BS ISO 10791-7:2020

National foreword

This British Standard is the UK implementation of ISO 10791-7:2020. It supersedes BS ISO 10791-7:2014, which is withdrawn.

The UK participation in its preparation was entrusted to Technical Committee MTE/1/2, Machine tools - Accuracy.

A list of organizations represented on this committee can be obtained on request to its secretary.

This publication does not purport to include all the necessary provisions of a contract. Users are responsible for its correct application.

© The British Standards Institution 2020
Published by BSI Standards Limited 2020

ISBN 978 0 580 98739 7

ICS 25.040.10

Compliance with a British Standard cannot confer immunity from legal obligations.

This British Standard was published under the authority of the Standards Policy and Strategy Committee on 31 January 2020.

Amendments/corrigenda issued since publication

Date	Text affected

Documents
Document Sharing Hub

Full document details: BS ISO 10791-7:2020

INTERNATIONAL STANDARD

ISO 10791-7

Third edition
2020-01

Test conditions for machining centres —

Part 7: Accuracy of finished test pieces

Conditions d'essai pour centres d'usinage —

Partie 7: Exactitude des pièces d'essai usinées

Reference number
ISO 10791-7:2020(E)

Documents
Document Sharing Hub
© ISO 2020

Full document details: BS ISO 10791-7:2020

COPYRIGHT PROTECTED DOCUMENT

© ISO 2020

All rights reserved. Unless otherwise specified, or required in the context of its implementation, no part of this publication may be reproduced or utilized otherwise in any form or by any means, electronic or mechanical, including photocopying, or posting on the internet or an intranet, without prior written permission. Permission can be requested from either ISO at the address below or ISO's member body in the country of the requester.

ISO copyright office
CP 401 • Ch. de Blandonnet 8
CH-1214 Vernier, Geneva
Phone: +41 22 749 01 11
Fax: +41 22 749 09 47
Email: copyright@iso.org
Website: www.iso.org

Published in Switzerland

© ISO 2020 – All rights reserved

Documents
Document Sharing Hub

Full document details: BS ISO 10791-7:2020

Contents

Page

Foreword ..... **iv**
Introduction ..... **v**
1 Scope **1**
2 Normative references **1**
3 Terms and definitions **1**
4 Preliminary remarks **4**
4.1 Measuring units 4
4.2 Reference to ISO 230-1 4
4.3 Testing sequence 5
4.4 Tests to be performed 5
4.5 Measuring instruments 5
4.6 Location of test pieces 5
4.7 Fixing of test pieces 5
4.8 Material of test pieces, tooling, and cutting parameters 5
4.9 Sizes of test pieces 5
4.10 Types of test pieces 6
4.11 Information to be recorded 6
4.12 Software compensation 6
5 Machining tests **7**
Annex A (informative) **Accuracy of a finished freeform test piece (M5)** **29**
Bibliography **44**

© ISO 2020 – All rights reserved

Documents
Document Sharing Hub
Full document details: BS ISO 10791-7:2020

Foreword

ISO (the International Organization for Standardization) is a worldwide federation of national standards bodies (ISO member bodies). The work of preparing International Standards is normally carried out through ISO technical committees. Each member body interested in a subject for which a technical committee has been established has the right to be represented on that committee. International organizations, governmental and non-governmental, in liaison with ISO, also take part in the work. ISO collaborates closely with the International Electrotechnical Commission (IEC) on all matters of electrotechnical standardization.

The procedures used to develop this document and those intended for its further maintenance are described in the ISO/IEC Directives, Part 1. In particular, the different approval criteria needed for the different types of ISO documents should be noted. This document was drafted in accordance with the editorial rules of the ISO/IEC Directives, Part 2 (see www.iso.org/directives).

Attention is drawn to the possibility that some of the elements of this document may be the subject of patent rights. ISO shall not be held responsible for identifying any or all such patent rights. Details of any patent rights identified during the development of the document will be in the Introduction and/or on the ISO list of patent declarations received (see www.iso.org/patents).

Any trade name used in this document is information given for the convenience of users and does not constitute an endorsement.

For an explanation of the voluntary nature of standards, the meaning of ISO specific terms and expressions related to conformity assessment, as well as information about ISO's adherence to the World Trade Organization (WTO) principles in the Technical Barriers to Trade (TBT) see www.iso.org/iso/foreword.html.

This document was prepared by Technical Committee ISO/TC 39, *Machine Tools*, Subcommittee SC 2, *Test conditions for metal cutting machine tools.*

Any feedback or questions on this document should be directed to the user's national standards body. A complete listing of these bodies can be found at www.iso.org/members.html.

This third edition cancels and replaces the second edition (ISO 10791-7:2014), which has been technically revised.

The main changes compared to the previous edition are as follows:

— new Clause 3 has been added;

— new Annex A has been added.

A list of all parts of this ISO series can be found on the ISO website.

© ISO 2020 – All rights reserved
Documents
Document Sharing Hub
Full document details: BS ISO 10791-7:2020

Introduction

A machining centre is a numerically controlled machine tool capable of performing multiple machining operations, including milling, boring, drilling, and tapping, as well as automatic tool changing from a magazine or similar storage unit in accordance with a machining programme. Most machining centres have facilities for automatically changing the direction in which the workpieces are presented to the tool.

The purpose of the ISO 10791 series is to supply information as widely and comprehensively as possible on tests and checks which can be carried out for comparison, acceptance, maintenance, or any other purpose.

The International Organization for Standardization (ISO) draw[s] attention to the fact that it is claimed that compliance with this document may involve the use of a patent.

ISO takes no position concerning the evidence, validity and scope of this patent right.

The holder of this patent right has assured ISO that he/she is willing to negotiate licences under reasonable and non-discriminatory terms and conditions with applicants throughout the world. In this respect, the statement of the holder of this patent right is registered with ISO. Information may be obtained from the patent database available at www.iso.org/patents.

Attention is drawn to the possibility that some of the elements of this document may be the subject of patent rights other than those in the patent database. ISO shall not be held responsible for identifying any or all such patent rights.

© ISO 2020 – All rights reserved

Documents
Document Sharing Hub
Full document details: BS ISO 10791-7:2020

Documents
Document Sharing Hub

Test conditions for machining centres —

Part 7: Accuracy of finished test pieces

1 Scope

This document specifies, by reference to the relevant parts of ISO 230, several families of tests for machining centres with horizontal or vertical spindle or with universal heads of different types, standing alone, or integrated in flexible manufacturing systems. This document also establishes the tolerances or maximum acceptable values for the test results corresponding to general purpose and normal accuracy machining centres.

This document is also applicable, totally or partially, to numerically controlled milling and boring machines, when their configuration, components, and movements are compatible with the tests described herein.

This document specifies standard test pieces with reference to ISO 230-1, cutting tests under finishing conditions. It also specifies the characteristics and dimensions of the test pieces themselves. This document is intended to supply minimum requirements for assessing the cutting accuracy of the machining centres with 3 to 5 simultaneous machining axes. Annex A introduces a freeform test piece for five-axis machining centres. This machining test is applied to machining centres using five-axis flank milling of freeform surfaces.

2 Normative references

The following documents are referred to in the text in such a way that some or all of their content constitutes requirements of this document. For dated references, only the edition cited applies. For undated references, the latest edition of the referenced document (including any amendments) applies.

ISO 230-1, *Test code for machine tools — Part 1: Geometric accuracy of machines operating under no-load or quasi-static conditions*

3 Terms and definitions

For the purposes of this document, the terms given in ISO 230-1 and the following apply.

ISO and IEC maintain terminological databases for use in standardization at the following addresses:

— ISO Online browsing platform: available at https://www.iso.org/obp

— IEC Electropedia: available at https://www.electropedia.org/

3.1
ruled surface
surface containing a family of straight lines

Note 1 to entry: A ruled surface is shown in Figure 1, where each isoparametric line (parameter u constant) is a straight line, called a rule. The parametric equation for the ruled surface in Figure 1 is given in Formula (1):

$$S(u,v)=(1-v)\times C_0(u)+v\times C_1(u)\left[u\in(0,1),v\in(0,1)\right] \quad (1)$$

© ISO 2020 – All rights reserved

Documents Document Sharing Hub
Full document details: BS ISO 10791-7:2020

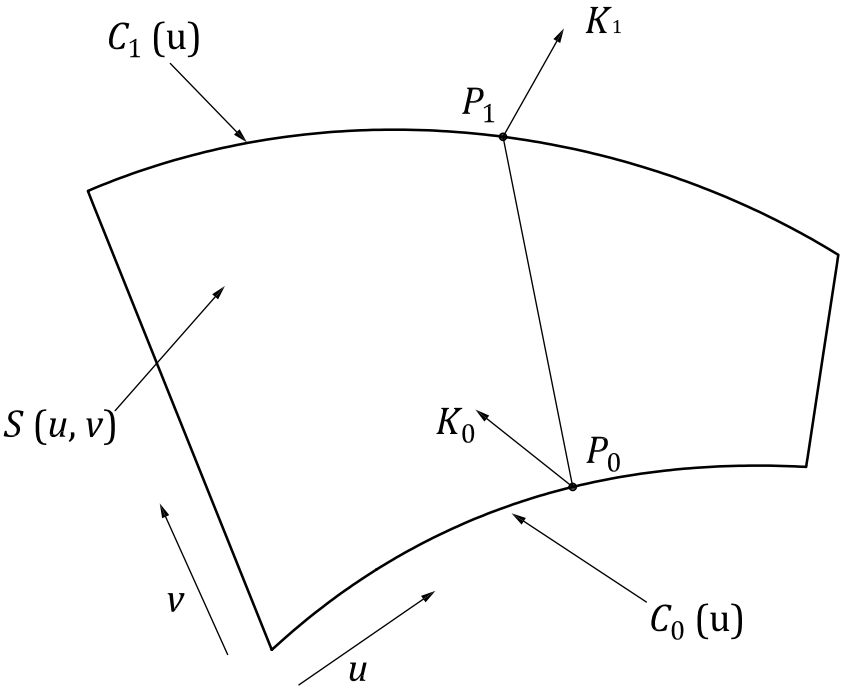

Key

u, v	parameters in u-direction and v-direction
$C_0(u)$, $C_1(u)$	curves in space both defined on the same parametric interval $u(0, 1)$
$S(u, v)$	surface generated by the movement of a rule moving over two curves $C_0(u)$ and $C_1(u)$ that provide its direction
P_0, P_1	two end points of a rule
K_0, K_1	vector normal to $S(u, v)$ at P_0 and P_1

Figure 1 — Ruled surface

3.2
non-uniform rational B-spline
NURBS
mathematical model commonly used in computer graphics for generating and representing curves and surfaces.

Note 1 to entry: A NURBS curve is defined by its order, a set of weighted control points, and a knot vector. The order defines the number of nearby control points that influence any given point on the curve. The control points determine the shape of the curve, and the weight of each point varies according to the governing parameter. The knot vector is a sequence of parameter values that determines where and how the control points affect the NURBS curve.

Note 2 to entry: NURBS is commonly used in computer aided design, manufacturing, and engineering and is a part of numerous industry wide standards, such as STEP (Standard for the Exchange of Product Model Data, see ISO 10303-21).

3.3
quasi-uniform rational B-spline
special type of non-uniform rational B-spline

Note 1 to entry: For an nth order quasi-uniform rational B-spline, the weights of all the control points are the same, and the knot vector is uniformly distributed with multiplicity n at the start and the end. For example, the number of control points is m, then the knot vector is as per Formula (2):

© ISO 2020 – All rights reserved
Documents
Document Sharing Hub
Full document details: BS ISO 10791-7:2020

$$\left(\underbrace{0,0,\ldots,0}_{n},\frac{1}{m-n-1},\frac{2}{m-n-1},\ldots,\frac{m-n-2}{m-n-1},\underbrace{1,1,\ldots,1}_{n}\right) \tag{2}$$

3.4
surface profile tolerance related to datums
tolerance zone defined by two surfaces enveloping spheres with diameter ***t***, the centres of which are situated on a surface having the theoretically exact geometrical form with respect to datums

Note 1 to entry: See Figure 2, Figure 3 and ISO 1101:2017, 17.9.

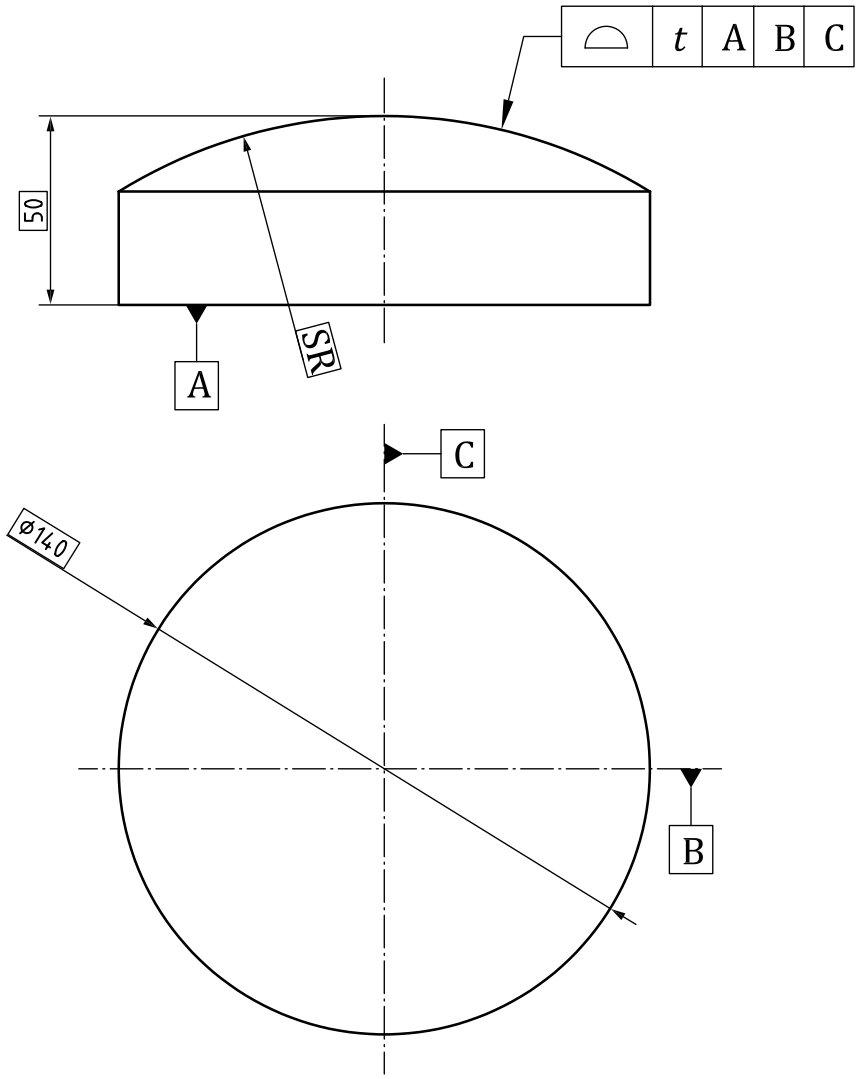

Key

A, B, C datum planes
SR nominal radius of sphere
t tolerance

Figure 2 — Indication and explanation of surface profile tolerance related to datums A, B, C

© ISO 2020 – All rights reserved

Documents
Document Sharing Hub
Full document details: BS ISO 10791-7:2020

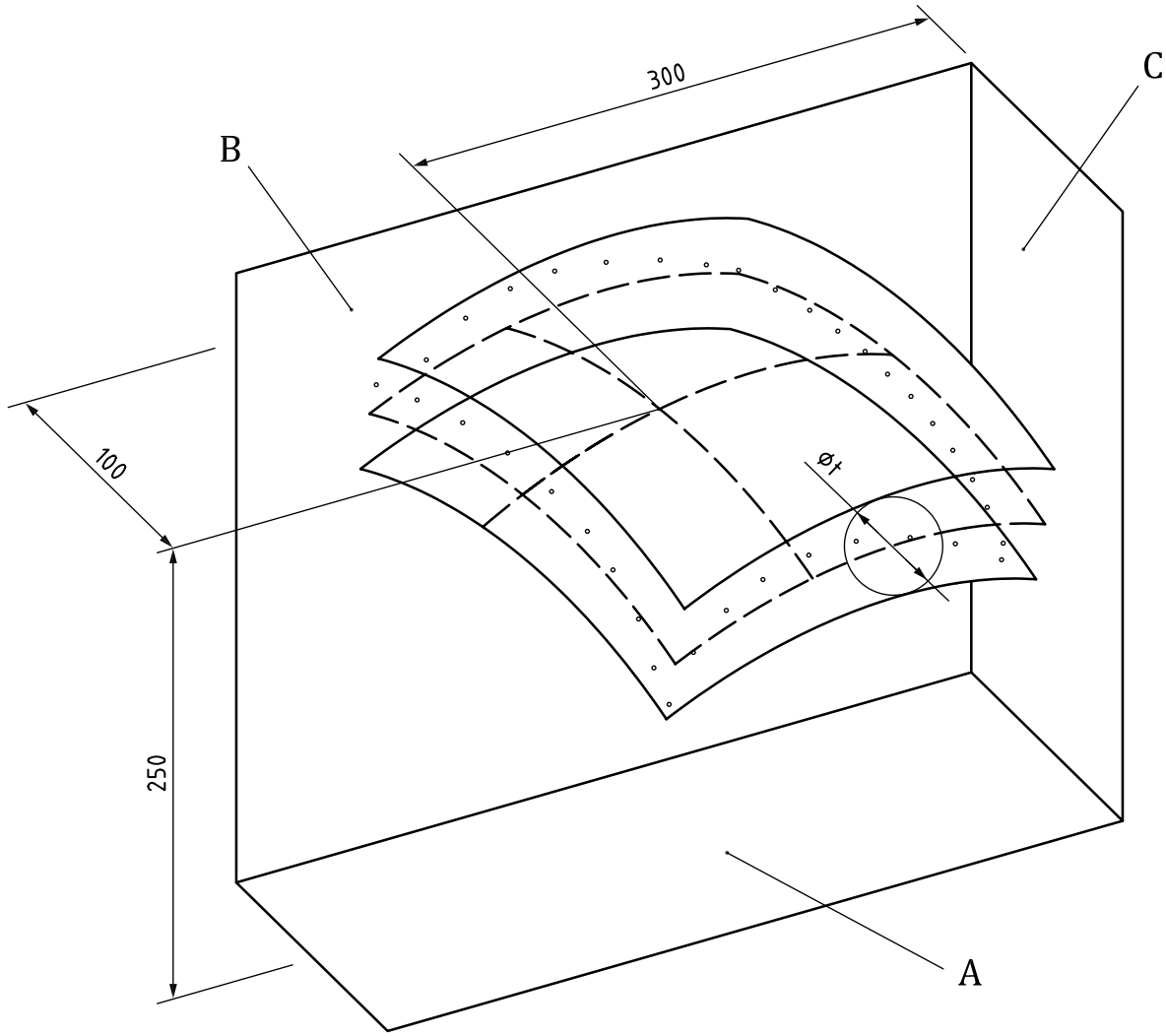

Key

A, B, C datum planes

Ø*t* tolerance zone (diameter of the enveloped spheres)

Figure 3 — Surface profile tolerance zone related to datums A, B, C

4 Preliminary remarks

4.1 Measuring units

In this document, all linear dimensions and deviations are expressed in millimetres. All angular dimensions are expressed in degrees. Angular deviations are, in principle, expressed in ratios (e.g. 0,00x /1 000), but in some cases, microradians or arcseconds can be used for clarification purposes. Formula (3) should be used for conversion of angular deviations or tolerances:

$$0{,}010 / 1\ 000 = 10\ \mu\text{rad} \approx 2'' \tag{3}$$

4.2 Reference to ISO 230-1

To apply this document, reference shall be made to ISO 230-1, especially for the installation of the machine before testing, warming up of the machine, description of measuring methods, and evaluation and presentation of the results.

© ISO 2020 – All rights reserved
Documents
Document Sharing Hub
Full document details: BS ISO 10791-7:2020

4.3 Testing sequence

The sequence in which the tests are presented in this document does not define the practical order of testing. In order to make the mounting of fixtures and machining easier, tests can be performed in any order.

4.4 Tests to be performed

When testing a machine tool, it is not always necessary or possible to carry out all the tests described in this document. When the tests are required for acceptance purposes, it is up to the user to choose, in mutual agreement with the manufacturer/supplier, those tests relating to the components and/or the properties of the machine tool which are of interest. These tests are to be clearly stated when ordering a machine tool. A mere reference to this document for the acceptance tests cannot be considered as binding for any contracting party without specifying the tests to be carried out and without mutual agreement on the relevant expenses.

In principle, no more than one piece of each type should be machined for acceptance purposes. In case of special requirements, such as statistical assessment of the machine tool performance (e.g. according to ISO 26303, short-term capability), the machining of more test pieces is to be agreed between the manufacturer/supplier and the user.

4.5 Measuring instruments

The measuring instruments indicated in the tests described in Clause 4 are examples only. Other instruments measuring the same quantities and having the same or smaller measurement uncertainty can be used.

4.6 Location of test pieces

The test piece should be placed approximately in the middle of the X-axis, and in positions along the Y- and Z-axes suitable for the location of the test piece and/or fixture, and for the tool lengths if not specified otherwise in the test procedure.

4.7 Fixing of test pieces

The test piece shall be conveniently mounted on a proper fixture, such that maximum stability of tools and fixture is achieved. The mounting surfaces of the fixture and of the test piece shall be flat. It is recommended that a suitable means of fixturing be used to allow for tool breakthrough and full length machining of a centre hole, for example. It is also recommended to mount the test piece on the fixture with countersink/counterbored screws such that subsequent machining does not interfere with the screws. Other methods are possible and can be selected. Overall height of the test piece depends on the selected method of fixing.

4.8 Material of test pieces, tooling, and cutting parameters

The test piece material, tooling, and the subsequent cutting parameters are subject to mutual agreement between the manufacturer/supplier and the user and shall be recorded. The parameters provided in the cutting tests are for suggestions only. The test piece material shall be specified.

4.9 Sizes of test pieces

If the test pieces come from previous cutting tests and are re-useable, their characteristic dimensions should remain within ±10 % of those indicated this document. When the test pieces are re-used, a shallow cut shall be made to clean up all surfaces before new finishing test cuts are taken.

It is also recommended that type and serial number of the machine tool, date of test, and names and orientation of the axes are marked on the test pieces.

© ISO 2020 – All rights reserved

Documents
Document Sharing Hub
Full document details: BS ISO 10791-7:2020

Preliminary cuts should be taken in order to make the depth of cut as constant as possible.

The nominal size of test pieces can be modified by mutual agreement between the manufacturer/supplier and the user. The tool size and other machining conditions can also be modified.

4.10 Types of test pieces

In this document, five types of test piece are considered, some of them in two or three sizes. Types, sizes, and corresponding designation of the particular test piece are shown in Table 1. Among these types, M1 and M2 are applicable to 3-, 4-, and 5-axis machining centres. M3 and M5 are applicable only to 5-axis machining centres. M4 is applicable to 4- and 5-axis machining centres.

Table 1 — Types, sizes, and designation of the test pieces

Dimensions in millimetres

Type	Nominal size	Designation
M1 Positioning and contouring test piece	80	Test piece ISO 10791-7, M1_80
	160	Test piece ISO 10791-7, M1_160
	320	Test piece ISO 10791-7, M1_320
M2 Face milling test piece	80	Test piece ISO 10791-7, M2_80
	160	Test piece ISO 10791-7, M2_160
M3 Cone frustum test piece	15[a]	Test piece ISO 10791-7, M3_15
	45[a]	Test piece ISO 10791-7, M3_45
M4 Three-step square test piece	80	Test piece ISO 10791-7, M4_80
	160	Test piece ISO 10791-7, M4_160
	320	Test piece ISO 10791-7, M4_320
M5 Freeform test piece	—	Test piece ISO 10791-7, M5

[a] Half-apex angle of test piece, in degrees.

4.11 Information to be recorded

For tests made according to the requirements of this document, the following information shall be compiled as completely as possible and included in the test report:

a) material and designation of the test piece;

b) material, dimensions, coating, and the number of teeth of the tools used;

c) cutting speed;

d) feed speed;

e) depth of cut;

f) other cutting conditions, e.g. cutting fluid;

g) position and orientation of the workpiece in the work space;

h) direction of cuts (where applicable).

4.12 Software compensation

When software facilities are available for compensating some geometric errors, based on a mutual agreement between the manufacturer/supplier and the user, the relevant test can be carried out with these compensations. When the software compensation is used, this shall be stated in the test report.

© ISO 2020 – All rights reserved
AVA Documents Document Sharing Hub
Full document details: BS ISO 10791-7:2020

5 Machining tests

Object	**M1**

Checking the performance of the machine tool under different kinematic conditions, i.e. only one axis feed, linear interpolation of two axes and circular interpolation by machining five bored holes and a series of finishing passes on different profiles.

NOTE 1 This test is usually performed in the XY plane of the machine tool, but can be performed in the other coordinate planes when a universal spindle head is available.

NOTE 2 Test M4 defines additions to test M1 for testing accuracy and positioning of rotary and swivelling axes.

Diagram

Three sizes of contouring test piece are considered and their dimensions are shown below.

Test piece ISO 10791-7, M1_80

Dimensions in millimetres

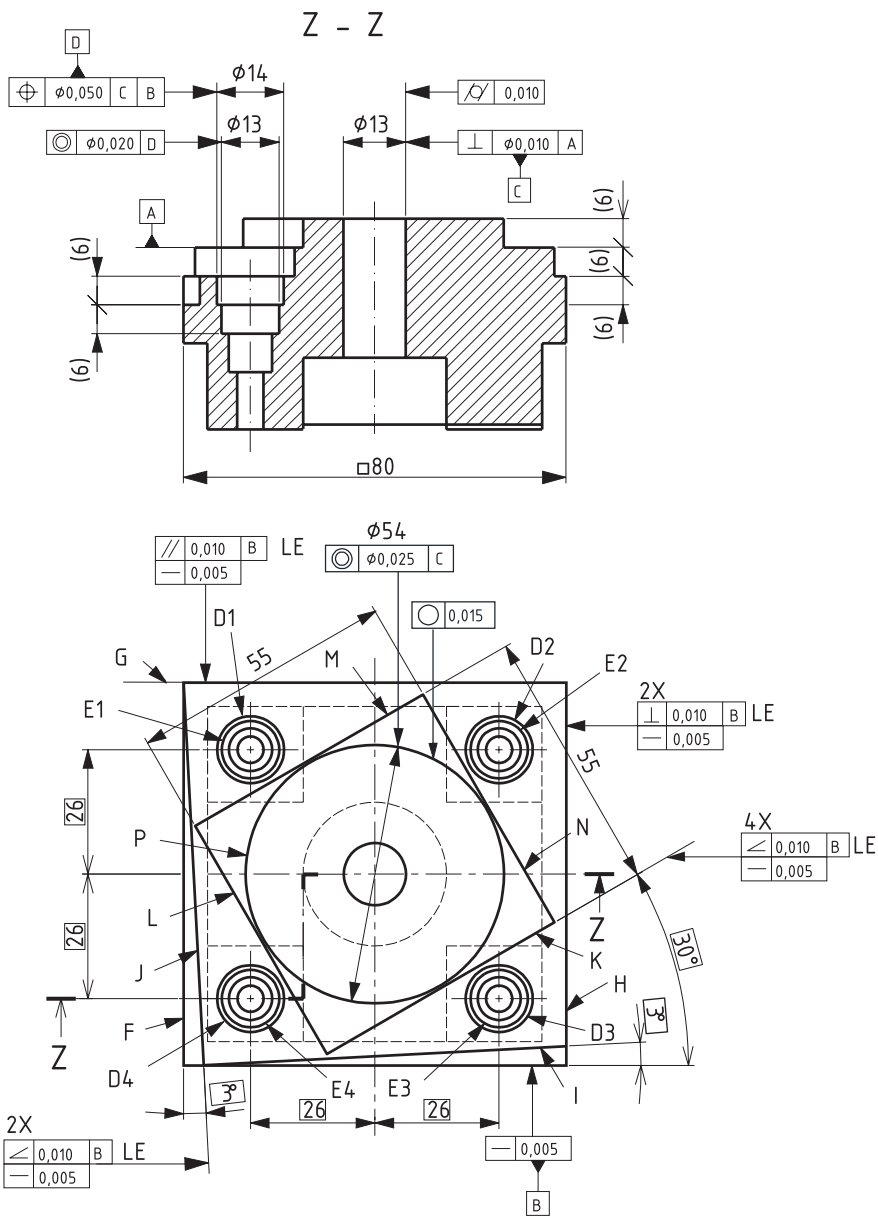

© ISO 2020 – All rights reserved

Documents
Document Sharing Hub
Full document details: BS ISO 10791-7:2020

Test piece ISO 10791-7, M1_160

Dimensions in millimetres

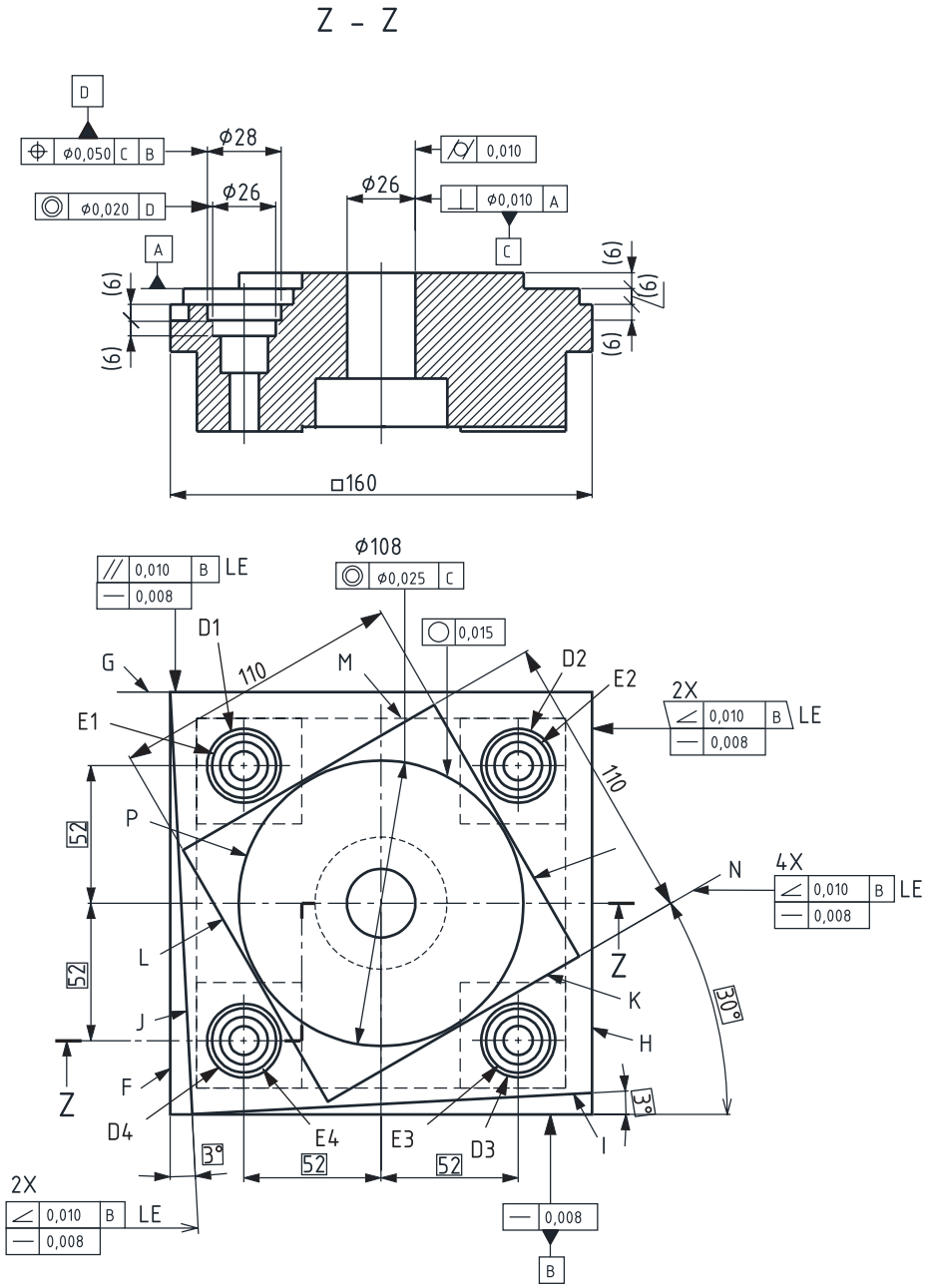

© ISO 2020 – All rights reserved

Documents
Document Sharing Hub
Full document details: BS ISO 10791-7:2020

Test piece ISO 10791-7, M1_320

Dimensions in millimetres

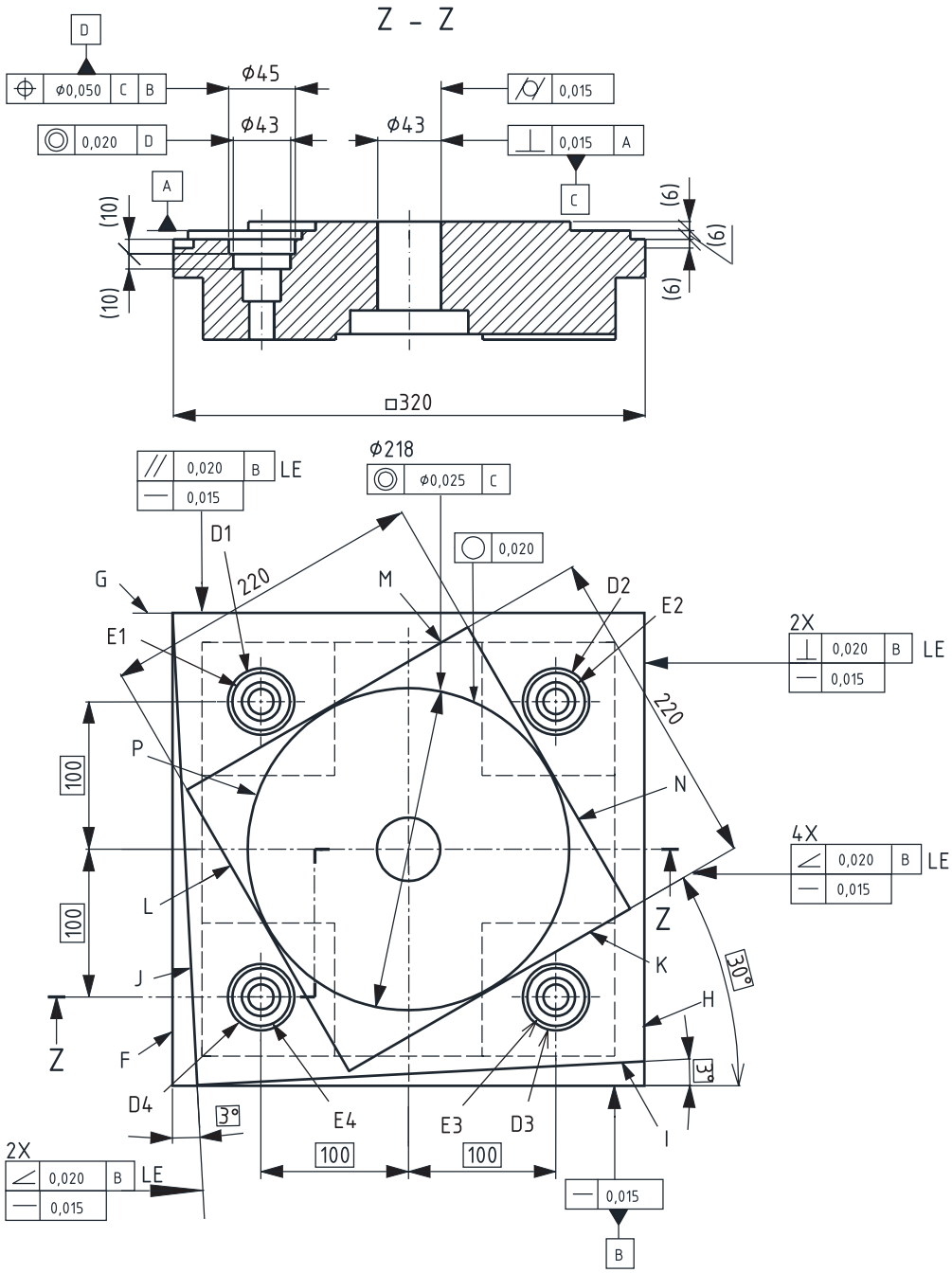

© ISO 2020 – All rights reserved

Documents
Document Sharing Hub
Full document details: BS ISO 10791-7:2020