BS ISO 10803:2024

BSI Standards Publication

Design method for ductile iron pipes

Documents
Document Sharing Hub

Full document details: BS ISO 10803:2024

National foreword

This British Standard is the UK implementation of ISO 10803:2024. It supersedes BS ISO 10803:2011, which is withdrawn.

The UK participation in its preparation was entrusted to Technical Committee PSE/10, Iron pipes and fittings.

A list of organizations represented on this committee can be obtained on request to its committee manager.

Contractual and legal considerations

This publication has been prepared in good faith, however no representation, warranty, assurance or undertaking (express or implied) is or will be made, and no responsibility or liability is or will be accepted by BSI in relation to the adequacy, accuracy, completeness or reasonableness of this publication. All and any such responsibility and liability is expressly disclaimed to the full extent permitted by the law.

This publication is provided as is, and is to be used at the recipient's own risk.

The recipient is advised to consider seeking professional guidance with respect to its use of this publication.

This publication is not intended to constitute a contract. Users are responsible for its correct application.

© The British Standards Institution 2024
Published by BSI Standards Limited 2024

ISBN 978 0 539 17077 1

ICS 23.040.10

Compliance with a British Standard cannot confer immunity from legal obligations.

This British Standard was published under the authority of the Standards Policy and Strategy Committee on 30 November 2024.

Amendments/corrigenda issued since publication

Date	Text affected

Documents
Document Sharing Hub

Full document details: BS ISO 10803:2024

International Standard

ISO 10803

Design method for ductile iron pipes

Méthode de calcul des tuyaux en fonte ductile

Third edition
2024-11

Reference number
ISO 10803:2024(en)

© ISO 2024

Documents
Document Sharing Hub

Full document details: BS ISO 10803:2024

COPYRIGHT PROTECTED DOCUMENT

© ISO 2024

All rights reserved. Unless otherwise specified, or required in the context of its implementation, no part of this publication may be reproduced or utilized otherwise in any form or by any means, electronic or mechanical, including photocopying, or posting on the internet or an intranet, without prior written permission. Permission can be requested from either ISO at the address below or ISO's member body in the country of the requester.

ISO copyright office
CP 401 • Ch. de Blandonnet 8
CH-1214 Vernier, Geneva
Phone: +41 22 749 01 11
Email: copyright@iso.org
Website: www.iso.org

Published in Switzerland

Documents
Document Sharing Hub
Full document details: BS ISO 10803:2024

Contents

Page

Foreword ... **iv**

1 Scope ... **1**

2 Normative references ... **1**

3 Terms and definitions ... **1**

4 Design procedure ... **3**
4.1 General ... 3
4.2 Design steps ... 3

5 Design for internal pressure ... **3**
5.1 Design formulae for wall thickness ... 3
5.2 Design safety factors ... 4

6 Design for external loads ... **4**
6.1 Spangler formula ... 4
6.2 Pipe embedment ... 7
6.2.1 Types of embedment ... 7
6.2.2 Types of trenches ... 8
6.2.3 Embedment properties ... 8
6.2.4 Spangler modulus of native soils ... 9

7 Safety check against internal pressure and external loads ... **9**
7.1 Principle ... 9
7.1.1 General ... 9
7.1.2 Method 1: calculate maximum allowable depth of cover from maximum allowable pipe deflection ... 10
7.1.3 Method 2: calculate the actual pipe deflection from the actual depth of cover ... 10
7.2 Total vertical pressure on the pipe ... 10
7.3 Pressure from earth loads ... 11
7.4 Pressure from traffic loads ... 11
7.5 Allowable pipe diametral deflection ... 12

Annex A (informative) **Dimensions of preferred and other class pipes** ... **14**

Annex B (informative) **Examples of calculations for safety check with methods 1 and 2** ... **17**

Annex C (informative) **Examples of traffic loads systems** ... **34**

Annex D (informative) **Soil classification** ... **40**

Bibliography ... **41**

© ISO 2024 – All rights reserved

Documents
Document Sharing Hub
Full document details: BS ISO 10803:2024

Foreword

ISO (the International Organization for Standardization) is a worldwide federation of national standards bodies (ISO member bodies). The work of preparing International Standards is normally carried out through ISO technical committees. Each member body interested in a subject for which a technical committee has been established has the right to be represented on that committee. International organizations, governmental and non-governmental, in liaison with ISO, also take part in the work. ISO collaborates closely with the International Electrotechnical Commission (IEC) on all matters of electrotechnical standardization.

The procedures used to develop this document and those intended for its further maintenance are described in the ISO/IEC Directives, Part 1. In particular, the different approval criteria needed for the different types of ISO document should be noted. This document was drafted in accordance with the editorial rules of the ISO/IEC Directives, Part 2 (see www.iso.org/directives).

ISO draws attention to the possibility that the implementation of this document may involve the use of (a) patent(s). ISO takes no position concerning the evidence, validity or applicability of any claimed patent rights in respect thereof. As of the date of publication of this document, ISO had not received notice of (a) patent(s) which may be required to implement this document. However, implementers are cautioned that this may not represent the latest information, which may be obtained from the patent database available at www.iso.org/patents. ISO shall not be held responsible for identifying any or all such patent rights.

Any trade name used in this document is information given for the convenience of users and does not constitute an endorsement.

For an explanation of the voluntary nature of standards, the meaning of ISO specific terms and expressions related to conformity assessment, as well as information about ISO's adherence to the World Trade Organization (WTO) principles in the Technical Barriers to Trade (TBT), see www.iso.org/iso/foreword.html.

This document was prepared by Technical Committee ISO/TC *5, Ferrous metal pipes and metallic fittings*, Subcommittee SC 2, *Cast iron pipes, fittings and their joints*.

This third edition cancels and replaces the second edition (ISO 10803:2011), which has been technically revised.

The main changes are as follows:

— considering various applicable standards in different countries for the traffic loading, common new formulae have been developed to enable the calculation of the pressure on pipe due to traffic loads for any country;

— the previous formula to calculate the pressure on pipe due to traffic loads and the earth loads has no provision to consider the effect of the settlement of side fill and the effect of native soil; the modified formula now takes into account the effect of settlement of soil in terms of deflection lag factor and the effect of native soil by considering the soil modulus of native soil;

Any feedback or questions on this document should be directed to the user's national standards body. A complete listing of these bodies can be found at www.iso.org/members.html.

© ISO 2024 – All rights reserved

Documents
Document Sharing Hub
Full document details: BS ISO 10803:2024

Design method for ductile iron pipes

1 Scope

This document specifies the design of ductile iron pipes used for conveying water, sewerage and other fluids

— with or without internal pressure, and

— with or without earth and traffic loading.

The design method defined in this document is applicable to ductile iron pipes conforming to ISO 2531, ISO 7186 and ISO 16631.

2 Normative references

The following documents are referred to in the text in such a way that some or all of their content constitutes requirements of this document. For dated references, only the edition cited applies. For undated references, the latest edition of the referenced document (including any amendments) applies.

ISO 2531, *Ductile iron pipes, fittings, accessories and their joints for water applications*

ISO 7186, *Ductile iron products for sewerage applications*

ISO 7268, *Pipe components — Definition of nominal pressure*

ISO 10802, *Ductile iron pipelines — Hydrostatic testing after installation*

ISO 16631, *Ductile iron pipes, fittings, accessories and their joints compatible with plastic (PVC or PE) piping systems, for water applications and for plastic pipeline connections, repair and replacement*

3 Terms and definitions

For the purposes of this document, the terms and definitions given in ISO 7268 and the following apply.

ISO and IEC maintain terminology databases for use in standardization at the following addresses:

— ISO Online browsing platform: available at https://www.iso.org/obp

— IEC Electropedia: available at https://www.electropedia.org/

3.1
allowable operating pressure
PFA
P_{FA}
maximum internal pressure, excluding surge, that a component can safely withstand in permanent service

[SOURCE: ISO 2531:2009, 3.2, modified — The symbol P_{FA} has been added.]

3.2
maximum allowable operating pressure
PMA
P_{MA}
maximum internal pressure, including surge, that a component can safely withstand in service

[SOURCE: ISO 2531:2009, 3.17, modified — The symbol P_{MA} has been added.]

© ISO 2024 – All rights reserved

Documents
Document Sharing Hub
Full document details: BS ISO 10803:2024

3.3
allowable site test pressure
PEA
P_{EA}
maximum hydrostatic pressure that a newly installed component can withstand for a relatively short duration, when either fixed above ground level or laid and backfilled underground, in order to ensure the integrity and leak tightness of the pipeline

Note 1 to entry: This test pressure is different from the system test pressure, which is related to the *design pressure* (3.11) of the pipeline.

[SOURCE: ISO 2531:2009, 3.3, modified — The symbol P_{EA} has been added.]

3.4
embedment
arrangement and type(s) of material around a buried pipeline, which contribute to its structural performance

Note 1 to entry: See Figure 2.

3.5
bedding
lower part of the *embedment* (3.4), composed of the lower bedding (if necessary) and the upper bedding

Note 1 to entry: See Figure 2.

3.6
bedding reaction angle
conventional angle used in the calculation model to account for the actual soil pressure distribution at pipe invert

3.7
compaction
deliberate densification of soil during the installation process

3.8
standard proctor density
degree of soil *compaction* (3.7) using a 2,5 kg rammer and a 305 mm drop

Note 1 to entry: The degree of soil compaction is defined in AASHTO T99.

3.9
deflection lag factor
factor that takes account of the settlement of the sidefill over time resulting in further deflection of the pipe, till the final equilibrium is reached after pipe installation

3.10
operating pressure
OP
P_O
highest pressure that occurs at a time and at a point in the pipeline when operating continuously under stable conditions, without surge

3.11
design pressure
maximum *operating pressure* (3.10) of the pipeline system or of the pressure zone fixed by the designer, considering future developments but excluding surge

© ISO 2024 – All rights reserved

Documents
Document Sharing Hub
Full document details: BS ISO 10803:2024

4 Design procedure

4.1 General

The pipe wall thickness shall provide adequate strength against the internal pressure of the fluid and against the effects of external loads due to backfill and surcharge, i.e. traffic loadings.

Ductile iron pipes in conformity with ISO 2531 are classified according to their allowable operating pressure for use in water applications. Ductile iron pipes in conformity with ISO 7186 are for sewerage applications either under pressure or under gravity. Ductile iron pipes in conformity with ISO 16631 are for water applications with joints compatible with plastic (PVC or PE) piping systems either under pressure or without pressure. Using the formulae given in Clauses 5 and 6, the design of buried pipes is performed by determining:

a) the minimum pipe wall thickness for the allowable operating pressure (PFA); and

b) the allowable depths of cover for the external loads as per procedure given in Clause 7.

NOTE National standards or established calculation methods can be used instead of this document.

4.2 Design steps

The steps for the design procedure for the pipes are given below.

a) Based on the design pressure of the pipeline system, select pressure class of pipe as appropriate in accordance with ISO 2531 or ISO 7186 or ISO 16631 such that PFA of selected pipe class is higher than the design pressure.

b) Check the safety against the external loads for the selected pipe class by using appropriate method for calculating the allowable depth of cover as defined in Clause 7.

c) If the allowable depth of cover is not adequate, select higher pressure class of pipe and repeat steps 4.2 a) and b) until the allowable depth of cover is acceptable.

NOTE When installed and operated under the conditions for which they are designed, ductile iron pipes, fittings, accessories and their joints maintain all their functional characteristics over their operating life, due to constant material properties, to the stability of their cross-section and to their design with high safety factors.

5 Design for internal pressure

5.1 Design formulae for wall thickness

The minimum wall thickness of pipes, e_{min}, shall be not less than 3 mm (as specified in ISO 2531) or 2,4 mm (as specified in ISO 7186) or 2,2 mm (in accordance with ISO 16631) and shall be determined using Formula (1):

$$e_{min} = \frac{P_{FA} \cdot S_{FH} \cdot D_E}{2 \cdot R_m + (P_{FA} \cdot S_{FH})} \quad (1)$$

where

e_{min} is the minimum pipe wall thickness to resist hoop stress due to internal pressure, in mm;

P_{FA} is the allowable operating pressure, in MPa (see 5.2);

S_{FH} is the design safety factor against hoop stress (see 5.2);

D_E is the nominal pipe external diameter (DE), in mm (see Annex A);

© ISO 2024 – All rights reserved

Documents
Document Sharing Hub
Full document details: BS ISO 10803:2024

R_m is the minimum ultimate tensile strength of the ductile iron, in MPa (R_m = 420 MPa as defined in ISO 2531 or ISO 7186 or ISO 16631).

Nominal wall thickness, e_{nom}, of the pipe is calculated as given in Formula (2) for pipes conforming to ISO 2531, ISO 7186 and ISO 16631:

$$e_{nom} = e_{min} + (1{,}3 + 0{,}001 D_N) \quad (2)$$

where D_N is the nominal diameter (DN) of pipe, in mm, as defined in Annex A.

Nominal pipe wall thicknesses for various classes in accordance with ISO 2531 are given in Table A.1 and nominal pipe wall thicknesses for pressure and gravity pipe classes in accordance with ISO 7186 are given in Table A.2.

Nominal pipe wall thicknesses for various sizes in accordance with ISO 16631 are given in Table A.3.

5.2 Design safety factors

The minimum pipe wall thickness, e_{min}, shall be calculated with a design safety factor of 2,5 for the maximum allowable operating pressure (i.e. PMA as indicated in ISO 2531 and ISO 7186) and a design safety factor of 3 for the allowable operating pressure (i.e. PFA as indicated in ISO 2531 and ISO 7186).

Field testing of installed ductile iron pipelines shall be done in accordance with ISO 10802 by application of test pressures up to the allowable site test pressures (i.e. PEA given in ISO 2531 and ISO 7186).

6 Design for external loads

6.1 Spangler formula

The design formula is based on Spangler model (Figure 1), where the vertical pressure, q, is acting downward and:

— is uniformly distributed at the pipe crown over a diameter;

— is in equilibrium with a pressure, acting upward at the pipe invert, uniformly distributed over the bedding reaction angle 2α;

— causes a pipe deflection, which gives rise to a horizontal reaction pressure at pipe sides, parabolically distributed over an angle of 100°.

© ISO 2024 – All rights reserved

Documents
Document Sharing Hub
Full document details: BS ISO 10803:2024

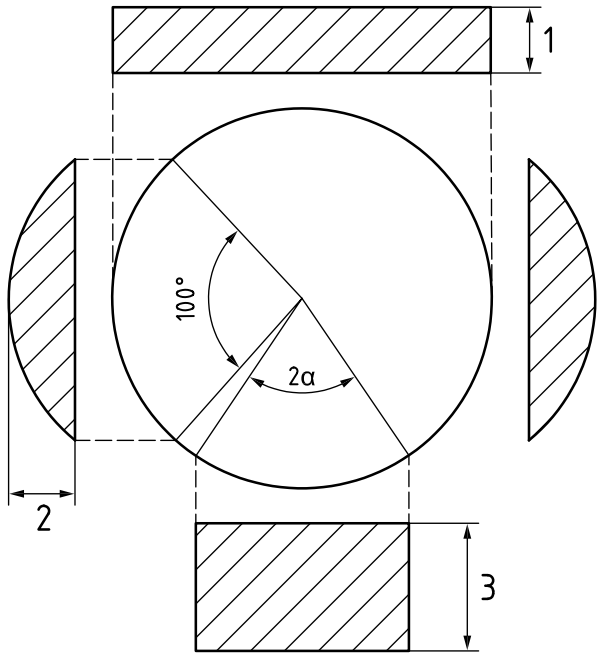

Key

1 vertical pressure

2 lateral reaction pressure distribution

3 vertical reaction pressure distribution

Figure 1 — Spangler model

The pipe diametral deflection and vertical pressure at pipe crown based on Spangler model are calculated from Formulae (3) and (4):

$$\Delta = 100 \frac{K_x q}{8S + 0{,}061E'} \tag{3}$$

$$q = D_{LY} \cdot q_1 + q_2 \tag{4}$$

where

Δ is the pipe diametral deflection, in per cent of external diameter, DE;

K_x is the deflection coefficient depending on bedding reaction angle, given in Table 1 for each trench type and soil group;

q is the vertical pressure at pipe crown due to all external loads, in MPa;

q_1 is the vertical pressure at pipe crown due to earth load, in MPa;

q_2 is the vertical pressure at pipe crown due to traffic load, in MPa;

S is the pipe diametral stiffness, in MPa;

E' is the modulus of soil reaction, in MPa;

D_{LY} is the long-term deflection factor.

© ISO 2024 – All rights reserved

Documents
Document Sharing Hub
Full document details: BS ISO 10803:2024

Long-term deflection factor (D_{LY}) and pipe soil stiffness factor are obtained from Formula (5) and (6):

$$D_{LY} = [1 + 0{,}8n(D_L - 1)] \cdot D_R \tag{5}$$

$$n = \frac{\left(\frac{E'}{D_L}\right)}{\left(105 \cdot S + 0{,}8\frac{E'}{D_L}\right)} \tag{6}$$

where

D_L is the deflection lag factor given in Table 1 for each trench type and soil group;

n is the pipe-soil stiffness factor;

D_R is the reduction factor on long-term deflection due to internal pressure $D_R = 1$, except if the pipeline is to be pressurised to at least 0,3 MPa within one year of buried depth at a depth of less than 2,5 m. In such a case:

$D_R = 1 - \frac{P_0}{4}$, where P_0 is the operating pressure (OP) in pipe in MPa.

S and E' are obtained from Formulae (7) and (8):

$$S = \frac{E\left(\frac{e_{stiff}^{\ 3}}{12}\right)}{D^3} \tag{7}$$

$$E' = E_2'.C_L \tag{8}$$

where

S is the pipe diametral stiffness, in MPa (S can also directly taken from the relevant annexes of ISO 2531 and ISO 7186);

E is the modulus of elasticity of the pipe wall material, in MPa (170 000 MPa for ductile iron);

D is the mean diameter of pipe $(D_E - e_{stiff})$, in mm;

D_E is the nominal pipe external diameter (DE) as specified in ISO 2531 and ISO 7186, in mm;

e_{stiff} is the average of the minimum pipe wall thickness of the pipe and nominal wall thickness of pipe, in mm, $[e_{stiff} = (e_{nom} + e_{min})/2]$;

E' is the modulus of soil reaction, in MPa;

E_2' is the embedment modulus of soil reaction for the selected pipe surround material at the chosen level of compaction (see Table 1);

C_L is the Leonhardt's coefficient to calculate the effective pipe soil stiffness factor.

© ISO 2024 – All rights reserved

Documents
Document Sharing Hub
Full document details: BS ISO 10803:2024

C_L is obtained by Formula (9):

$$C_L = \frac{0{,}985 + \left(0{,}544 \cdot \frac{W_t}{D_E}\right)}{\left[1{,}985 - 0{,}456 \cdot \left(\frac{W_t}{D_E}\right)\right] \cdot \left(\frac{E_2'}{E_3'}\right) - \left[\left(1 - \frac{W_t}{D_E}\right)\right]} \quad (9)$$

where

W_t is the width of trench in mm;

E_3' is the native soil modulus in MPa, given in Table 2.

6.2 Pipe embedment

6.2.1 Types of embedment

There are various types of embedments, which are designated into different classes based on configuration, bedding and side fills. A typical embedment and its various parameters are defined in Figure 2.

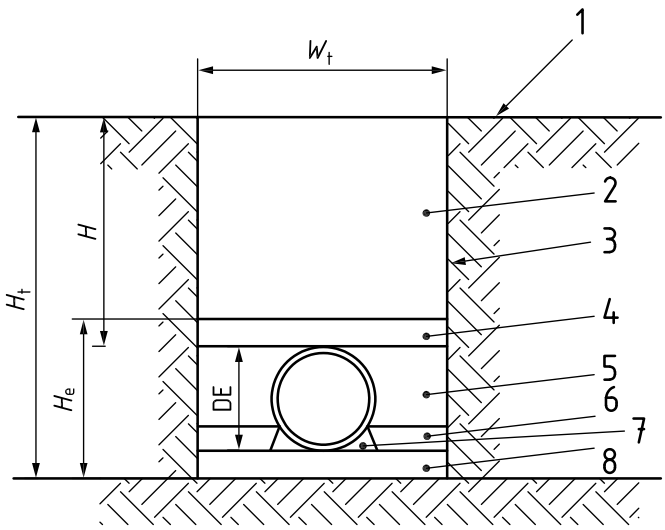

Key

1 surface
2 main fill
3 wall of trench
4 direct cover zone (initial backfill)
5 lateral fill (side fill)
6 upper bedding layer
7 haunch zone
8 lower bedding layer
H_t depth of trench
H height of cover
H_e height of embedment
DE outside diameter of pipe
W_t width of trench

Figure 2 — Typical trench embedment

© ISO 2024 – All rights reserved

Documents
Document Sharing Hub
Full document details: BS ISO 10803:2024

6.2.2 Types of trenches

There are following types of trenches.

a) Trench type 1: embedment dumped.

b) Trench type 2: embedment with very light compaction, greater than 75 % standard proctor density.

c) Trench type 3: embedment with light compaction, greater than 80 % standard proctor density.

d) Trench type 4: embedment with medium compaction, greater than 85 % standard proctor density.

e) Trench type 5: embedment with high compaction, greater than 90 % standard proctor density.

6.2.3 Embedment properties

Embedment properties depend on the type of embedment and compacted density (see 6.2.2 for type of trenches). Embedment properties i.e. value of deflection coefficient (K_x), compaction density, embedment soil modulus (E_2') and deflection lag factor (D_L) for various embedment classes are given in Table 1.

The bedding reaction angle depends on the installation conditions (bedding, sidefill compaction) and on the pipe diametral deflection. The embedment modulus of soil reaction, E_2', depends on the selected pipe surround material at the chosen level of compaction and the trench type.

In the absence of the applicable standards or other data, the values of E_2' indicated in Table 1 can be used at the design stage for five trench types and for six soil groups as defined in Annex D for the pipe surround material. A preliminary geotechnical survey should be carried out to facilitate identification of the soil and proper selection of E_2' values. The final value of modulus of soil reaction, E' is calculated as per the formulae defined in 6.1.

Table 1 — Pipe embedment properties (values of K_x, D_L and E_2')

Trench type	1		2		3		4		5	
Placement of embedment	Dumped		Very light compaction		Light compaction		Medium compaction		High Compaction	
Standard proctor density of sidefill, %	[a]		>75		>80		>85		>90	
Bedding reaction angle (2α)	30°		45°		60°		90°		150°	
K_x	0,108		0,105		0,102		0,096		0,085	
E_2' (MPa) and D_L	E_2' (MPa)	D_L	E_2' (MPa)	D_L	E_2' (MPa)	D_L	E_2' (MPa)	D_L	E_2' (MPa)	D_L
Soil group A	4	1,5	4	1,5	5	1,25	7	1,0	10	1,0
Soil group B	2,5	3,0	2,5	2,5	3,5	2,0	5	1,5	7	1,25
Soil group C	1	3,0	1,5	2,5	2	2,0	3	1,5	5	1,25
Soil group D	0,5	4,5	1	4,0	1,5	3,5	2,5	3,0	3,5	2,0
Soil group E	[b]	-	[b]	-	[b]	-	[b]	-	[b]	-
Soil group F	[b]	-	[b]	-	[b]	-	[b]	-	[b]	-

[a] Depending on the type of test of soil and its moisture content, a standard proctor density of 70 % to 80 % should normally be achieved by simply dumping the soil in the trench.

[b] Use an E_2' value of 0 unless it can be ensured that a higher value is achieved consistently.

© ISO 2024 – All rights reserved

Documents
Document Sharing Hub
Full document details: BS ISO 10803:2024

6.2.4 Spangler modulus of native soils

The stiffness of the native soil in which the pipeline trench is excavated is important for the design of ductile iron pipes. The stiffness of the native soil is measured in terms of the Spangler modulus $E_3{}'$ (see Table 2), which in combination with the soil modulus, $E_2{}'$, is used to calculate the overall modulus of soil reaction, E'.

Table 2 — Guide values of Spangler modulus of native soils ($E_3{}'$, in MPa)

Soil type	Very dense	Dense	Medium dense	Loose	Very loose
Gravel	> 40	15 to 40	9 to 15	5 to 9	3 to 5
Sand	15 to 20	9 to 15	4 to 9	2 to 4	1 to 2
Clayey, silty sand	10 to 15	6 to 10	2,5 to 6	1,5 to 2,5	0,5 to 1,5
Clay	Very hard	11 to 14			
	Hard	10 to 11			
	Very stiff	6 to 10			
	Stiff	4 to 6			
	Firm	3 to 4			
	Soft	1,5 to 3			
	Very soft	0 to 1,5			
SOURCE: BS 9295:2020, Table 27, reproduced with permission.					

7 Safety check against internal pressure and external loads

7.1 Principle

7.1.1 General

Two methods can be used for safety check of pipe class against external loads and internal pressure. Both the methods are based on Spangler formula (6.1) and their results are valid for the following conditions:

— minimum allowable depth of cover is equal to 2 times DN;

— for calculated depth of cover more than 6 meters, adequate structural pipeline design engineer recommendations should be considered as per the actual site conditions;

— the pipe deflection in percentage shall not exceed the value defined in 7.5.

In method 1, the allowable depth of cover is calculated based on the maximum allowable pipe deflection. In method 2, the actual deflection of the pipe is calculated based on the actual depth of cover. Examples of calculation with methods 1 and 2 are given in Annex B. Examples of national traffic load systems are given in Annex C.

In any case, it is presupposed that the height of cover complies with the project specifications and local regulations for traffic loading (type of load and lading pattern), the safety of people and shielding, and anti-freeze prevention.

© ISO 2024 – All rights reserved

Documents
Document Sharing Hub
Full document details: BS ISO 10803:2024