BS ISO 1081:2013

BSI Standards Publication

Belt drives — V-belts and V-ribbed belts, and corresponding grooved pulleys — Vocabulary

bsi.

...making excellence a habit.™

Document Sharing Hub

National foreword

This British Standard is the UK implementation of ISO 1081:2013.

The UK participation in its preparation was entrusted to Technical Committee MCE/10, Belts & Pulley Drive.

A list of organizations represented on this committee can be obtained on request to its secretary.

This publication does not purport to include all the necessary provisions of a contract. Users are responsible for its correct application.

© The British Standards Institution 2013. Published by BSI Standards Limited 2013

ISBN 978 0 580 77176 7

ICS 01.040.21; 21.220.10

Compliance with a British Standard cannot confer immunity from legal obligations.

This British Standard was published under the authority of the Standards Policy and Strategy Committee on 31 December 2013.

Amendments issued since publication

Date	Text affected

Documents
Document Sharing Hub

Full document details: BS ISO 1081:2013

INTERNATIONAL STANDARD

NORME INTERNATIONALE

ISO 1081

Third edition
Troisième édition
2013-12-01

Belt drives — V-belts and V-ribbed belts, and corresponding grooved pulleys — Vocabulary

Transmissions par courroies — Courroies trapézoïdales et striées, et poulies à gorges — Vocabulaire

Reference number
Numéro de référence
ISO 1081:2013(E/F)

© ISO 2013

Documents
Document Sharing Hub

Full document details: BS ISO 1081:2013

COPYRIGHT PROTECTED DOCUMENT
DOCUMENT PROTÉGÉ PAR COPYRIGHT

© ISO 2013

The reproduction of the terms and definitions contained in this International Standard is permitted in teaching manuals, instruction booklets, technical publications and journals for strictly educational or implementation purposes. The conditions for such reproduction are: that no modifications are made to the terms and definitions; that such reproduction is not permitted for dictionaries or similar publications offered for sale; and that this International Standard is referenced as the source document.

With the sole exceptions noted above, no other part of this publication may be reproduced or utilized otherwise in any form or by any means, electronic or mechanical, including photocopying, or posting on the internet or an intranet, without prior written permission. Permission can be requested from either ISO at the address below or ISO's member body in the country of the requester.

La reproduction des termes et des définitions contenus dans la présente Norme internationale est autorisée dans les manuels d'enseignement, les modes d'emploi, les publications et revues techniques destinés exclusivement à l'enseignement ou à la mise en application. Les conditions d'une telle reproduction sont les suivantes: aucune modification n'est apportée aux termes et définitions; la reproduction n'est pas autorisée dans des dictionnaires ou publications similaires destinés à la vente; la présente Norme internationale est citée comme document source.

À la seule exception mentionnée ci-dessus, aucune partie de cette publication ne peut être reproduite ni utilisée sous quelque forme que ce soit et par aucun procédé, électronique ou mécanique, y compris la photocopie, l'affichage sur l'internet ou sur un Intranet, sans autorisation écrite préalable. Les demandes d'autorisation peuvent être adressées à l'ISO à l'adresse ci-après ou au comité membre de l'ISO dans le pays du demandeur.

ISO copyright office
Case postale 56 • CH-1211 Geneva 20
Tel. + 41 22 749 01 11
Fax + 41 22 749 09 47
E-mail copyright@iso.org
Web www.iso.org

Published in Switzerland/Publié en Suisse

© ISO 2013 – All rights reserved/Tous droits réservés

Documents
Document Sharing Hub

Full document details: BS ISO 1081:2013

Contents

Page

Foreword ..... **iv**

0 Scope **1**

1 Terms and definitions relating to V-belts and grooved pulleys **1**
1.1 General terms and definitions 1
1.2 Terms and definitions relating to the system based on data widths 5
1.3 Terms and definitions relating to the system based on effective width 7

2 Terms and definitions related to V-belts and ribbed pulleys **9**
2.1 General terms and definitions 9

3 Terms and definitions relating to tension **14**

4 Terms and definitions relating to modulus **14**

© ISO 2013 – All rights reserved/Tous droits réservés

Documents
Document Sharing Hub
Full document details: BS ISO 1081:2013

Foreword

ISO (the International Organization for Standardization) is a worldwide federation of national standards bodies (ISO member bodies). The work of preparing International Standards is normally carried out through ISO technical committees. Each member body interested in a subject for which a technical committee has been established has the right to be represented on that committee. International organizations, governmental and non-governmental, in liaison with ISO, also take part in the work. ISO collaborates closely with the International Electrotechnical Commission (IEC) on all matters of electrotechnical standardization.

The procedures used to develop this document and those intended for its further maintenance are described in the ISO/IEC Directives, Part 1. In particular the different approval criteria needed for the different types of ISO documents should be noted. This document was drafted in accordance with the editorial rules of the ISO/IEC Directives, Part 2. www.iso.org/directives

Attention is drawn to the possibility that some of the elements of this document may be the subject of patent rights. ISO shall not be held responsible for identifying any or all such patent rights. Details of any patent rights identified during the development of the document will be in the Introduction and/or on the ISO list of patent declarations received. www.iso.org/patents

Any trade name used in this document is information given for the convenience of users and does not constitute an endorsement.

For an explanation on the meaning of ISO specific terms and expressions related to conformity assessment, as well as information about ISO's adherence to the WTO principles in the Technical Barriers to Trade (TBT) see the following URL: Foreword - Supplementary information

The committee responsible for this document is ISO/TC 41, *Pulleys and belts (including veebelts),* SC 1, *Veebelts and grooved pulleys*.

This third edition cancels and replaces the second edition (ISO 1081:1995), which has been technically revised.

© ISO 2013 – All rights reserved/Tous droits réservés
Documents
Document Sharing Hub
Full document details: BS ISO 1081:2013

INTERNATIONAL STANDARD ISO 1081:2013(E/F)

Belt drives — V-belts and V-ribbed belts, and corresponding grooved pulleys — Vocabulary

0 Scope

This International Standard specifies the terms and definitions, in English and French, relating to aromatic natural raw materials.

This International Standard defines terms relating to V-belt drives, V-belts, hexagonal belts, joined V-belts and the corresponding V-grooved pulleys, V-ribbed belt drives, V-ribbed belts and V-ribbed pulleys, as well as the corresponding symbols.

The general definitions are valid irrespective of the system describing the pulleys.

The dimensions of pulley grooves can be defined either on the basis of the datum width or on the basis of the effective width. As a result, two systems for the definition and description of the dimensions of pulleys and belts have been developed. The two systems are independent of each other.

1 Terms and definitions relating to V-belts and grooved pulleys

1.1 General terms and definitions

1.1.1 Belts

1.1.1.1
V-belt
belt, the cross-section of which is shaped roughly like a regular trapezium

Note 1 to entry: On a cross-section of a straight-sided belt, the trapezium is outlined by the base, sides and top of the belt.

Note 2 to entry: The intersection of the extended profiles of the base, side and top is considered when edges are cut short or rounded.

Note 3 to entry: See Figure 1.

1.1.1.1.1
hexagonal belt
special belt with hexagonal cross-section consisting of two equal isosceles trapezia joined at their wider base

1.1.1.1.2
joined V-belt
two or more equal trapezoidal V-belts placed side by side in a definite distance and joined by a covering band

© ISO 2013 – All rights reserved/Tous droits réservés

Documents
Document Sharing Hub
Full document details: BS ISO 1081:2013

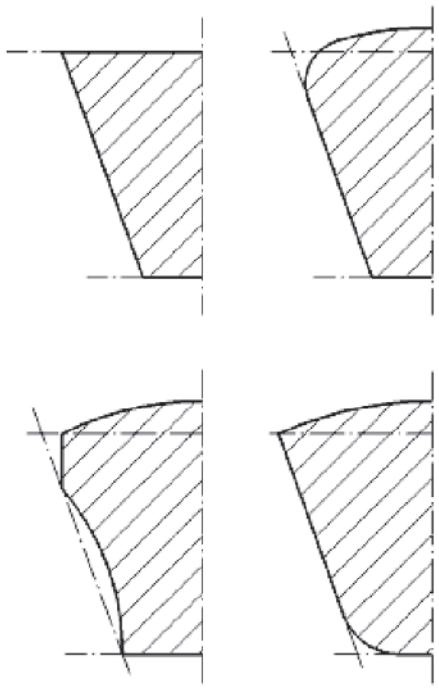

Figure 1 — V-belts

1.1.1.2
pitch line
any circumferential line in the belt which keeps the same length when the belt is bent perpendicularly to its base

Note 1 to entry: See Figure 2.

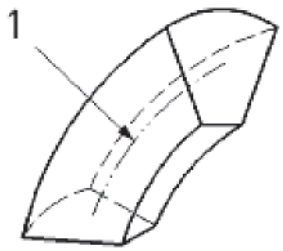

Key
1 pitch line

Figure 2 — Pitch line

1.1.1.3
pitch zone
geometrical zone containing all of the pitch lines

Note 1 to entry: See Figure 3.

© ISO 2013 – All rights reserved/Tous droits réservés
Documents
Document Sharing Hub
Full document details: BS ISO 1081:2013

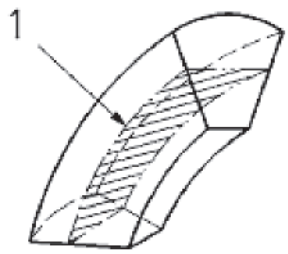

Key
1 pitch zone

Figure 3 — Pitch zone

1.1.1.4
pitch width
w_p
width of the belt at its pitch zone (neutral zone)

Note 1 to entry: The width remains unchanged when the belt is bent perpendicularly to its base.

Note 2 to entry: See Figure 4.

1.1.1.5
top width
w
larger width of the trapezium outlined on a cross-section

Note 1 to entry: See Figure 4.

1.1.1.6
height
T
height of the trapezium outlined on a cross-section

Note 1 to entry: See Figure 4.

1.1.1.7
relative height
non-dimensional characteristic calculated as the ratio of height to pitch width (T/w_p)

Note 1 to entry: The approximate relative height of the four types of V-belt is as follows:

— narrow V-belt: 0,9;

— classical V-belt: 0,7;

— half wide V-belt: 0,5;

— wide V-belt: 0,3.

© ISO 2013 – All rights reserved/Tous droits réservés

Documents
Document Sharing Hub
Full document details: BS ISO 1081:2013

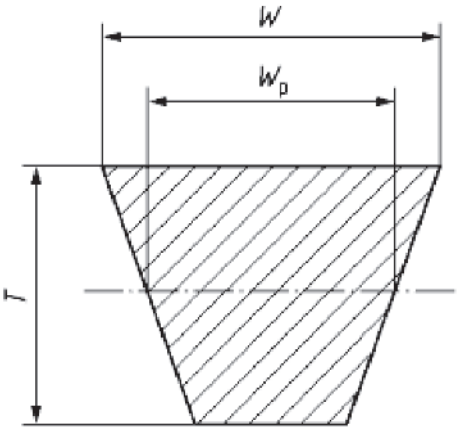

Figure 4 — Pitch width, top width, height

1.1.2 Pulleys

1.1.2.1
V-grooved pulley
pulley with one or more grooves obtained by rotation of a profile in the shape of a truncated or non-truncated symmetrical V around the pulley axis

Note 1 to entry: A round groove bottom is acceptable. In most cases, all the grooves of a pulley have identical profiles.

1.1.2.2
angle of pulley groove
α
angle included by the sides of the groove cross-section

Note 1 to entry: For any given profile, the pulley groove angle may have several different values depending upon the pulley diameter.

Note 2 to entry: See Figure 5.

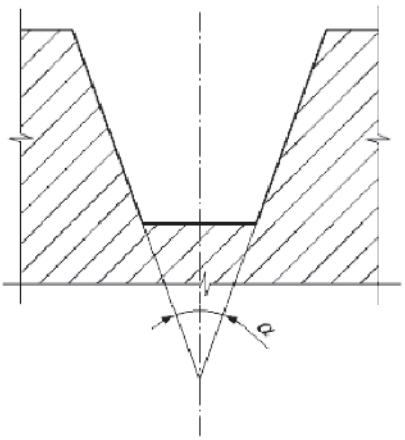

Figure 5 — Angle of pulley groove

1.1.2.3
pitch width of pulley groove
w_p
width of the pulley groove which has the same dimension as the pitch width of the belt used with this pulley

© ISO 2013 – All rights reserved/Tous droits réservés
Documents
Document Sharing Hub
Full document details: BS ISO 1081:2013

1.1.2.4
pitch diameter
d_p
diameter of the pulley at the pitch width of pulley groove

1.1.2.5
pitch circumference
C_p
circumference of a circle with a diameter equal to the pitch diameter

1.1.3 Drives

1.1.3.1
V-belt drive
drive which consists of one or more V-belts mounted on grooved pulleys

Note 1 to entry: The profiles of the belts and of the pulley grooves are such that the belts come into contact only with the sides of the pulley grooves and not with the bottom of the grooves.

1.1.3.2
speed ratio
R
ratio of the angular velocities of the pulleys, as calculated from the ratio of the pitch diameters of the pulleys, making no allowance for slip and creep

1.2 Terms and definitions relating to the system based on data widths

1.2.1 Pulleys

1.2.1.1
datum width
w_d
groove width characterizing the groove profile

Note 1 to entry: It is a defined value not subject to tolerance and is usually located at the level of the pitch zone of the V-belt for which the pulley groove is preferably intended. It should coincide with the pitch width of that V-belt within reasonable tolerances.

Note 2 to entry: The datum width of a pulley groove was previously designated as *pitch width* (l_p). However, the datum width is equal to the pitch width only when the pitch zone on the V-belt is located at the level of the datum width of the pulley groove.

Note 3 to entry: If different *angles of pulley groove* (1.1.2.2) are required, the groove flanks shall be assumed to hinge round both ends of the datum width.

Note 4 to entry: See Figure 6.

© ISO 2013 – All rights reserved/Tous droits réservés

Documents
Document Sharing Hub
Full document details: BS ISO 1081:2013

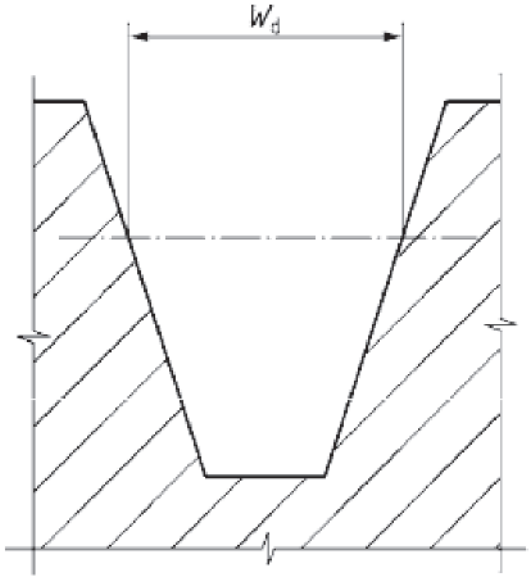

Figure 6 — Datum width

1.2.1.2
datum diameter
d_d
diameter of the pulley at the datum width of the pulley groove

Note 1 to entry: See Figure 7.

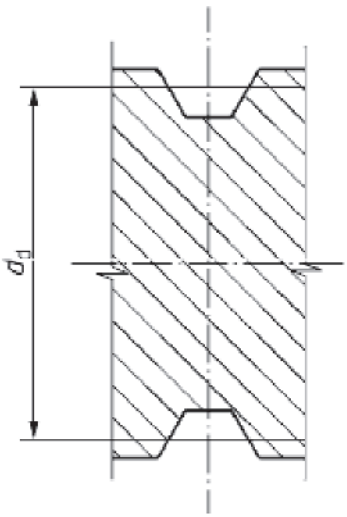

Figure 7 — Datum diameter

1.2.1.3
datum circumference
C_d
circumference of a circle with a diameter equal to the datum diameter

© ISO 2013 – All rights reserved/Tous droits réservés
Documents
Document Sharing Hub
Full document details: BS ISO 1081:2013