BS ISO 10816-8:2014

BSI Standards Publication

Mechanical vibration — Evaluation of machine vibration by measurements on non-rotating parts

Part 8: Reciprocating compressor systems

bsi.

...making excellence a habit.™

Document Sharing Hub

Full document details: BS ISO 10816-8:2014

National foreword

This British Standard is the UK implementation of ISO 10816-8:2014.

The UK participation in its preparation was entrusted to Technical Committee GME/21/5, Mechanical vibration, shock and condition monitoring - Vibration of machines.

A list of organizations represented on this committee can be obtained on request to its secretary.

This publication does not purport to include all the necessary provisions of a contract. Users are responsible for its correct application.

© The British Standards Institution 2014. Published by BSI Standards Limited 2014

ISBN 978 0 580 79165 9

ICS 17.160

Compliance with a British Standard cannot confer immunity from legal obligations.

This British Standard was published under the authority of the Standards Policy and Strategy Committee on 30 September 2014.

Amendments issued since publication

Date	Text affected

Documents
Document Sharing Hub

Full document details: BS ISO 10816-8:2014

INTERNATIONAL STANDARD

ISO 10816-8

First edition
2014-07-01

Mechanical vibration — Evaluation of machine vibration by measurements on non-rotating parts —

Part 8: Reciprocating compressor systems

Vibrations mécaniques — Évaluation des vibrations des machines par mesurages sur les parties non tournantes —

Partie 8: Systèmes de compresseurs alternatifs

Reference number
ISO 10816-8:2014(E)

Documents
Document Sharing Hub
© ISO 2014

Full document details: BS ISO 10816-8:2014

COPYRIGHT PROTECTED DOCUMENT

© ISO 2014

All rights reserved. Unless otherwise specified, no part of this publication may be reproduced or utilized otherwise in any form or by any means, electronic or mechanical, including photocopying, or posting on the internet or an intranet, without prior written permission. Permission can be requested from either ISO at the address below or ISO's member body in the country of the requester.

ISO copyright office
Case postale 56 • CH-1211 Geneva 20
Tel. + 41 22 749 01 11
Fax + 41 22 749 09 47
E-mail copyright@iso.org
Web www.iso.org

Published in Switzerland

© ISO 2014 – All rights reserved

Documents
Document Sharing Hub

Full document details: BS ISO 10816-8:2014

Contents

Page

Foreword ... **iv**
Introduction ... **v**
1 Scope ... **1**
2 Normative references ... **1**
3 Terms and definitions ... **2**
4 Measurements ... **2**
4.1 Measurement procedure ... 2
4.2 Measuring instrumentation and measured quantities ... 3
4.3 Locations and direction of measurements ... 3
4.4 Operating conditions ... 9
4.5 Record of measured results ... 9
5 Vibration criteria ... **9**
5.1 Measuring quantities ... 9
5.2 Evaluation zones ... 9
5.3 Guidance values for acceptable overall vibration values (2 Hz to 1 000 Hz) ... 10
Annex A (normative) **Measurement information requirements** ... **13**
Annex B (normative) **Curves with overall limits of vibration velocity values** ... **16**
Annex C (informative) **Measurement of vibration values on the crosshead guide** ... **22**
Annex D (informative) **Root-mean-square value, peak value, and crest factor** ... **25**
Bibliography ... **27**

© ISO 2014 – All rights reserved

Documents
Document Sharing Hub
Full document details: BS ISO 10816-8:2014

Foreword

ISO (the International Organization for Standardization) is a worldwide federation of national standards bodies (ISO member bodies). The work of preparing International Standards is normally carried out through ISO technical committees. Each member body interested in a subject for which a technical committee has been established has the right to be represented on that committee. International organizations, governmental and non-governmental, in liaison with ISO, also take part in the work. ISO collaborates closely with the International Electrotechnical Commission (IEC) on all matters of electrotechnical standardization.

The procedures used to develop this document and those intended for its further maintenance are described in the ISO/IEC Directives, Part 1. In particular the different approval criteria needed for the different types of ISO documents should be noted. This document was drafted in accordance with the editorial rules of the ISO/IEC Directives, Part 2 (see www.iso.org/directives).

Attention is drawn to the possibility that some of the elements of this document may be the subject of patent rights. ISO shall not be held responsible for identifying any or all such patent rights. Details of any patent rights identified during the development of the document will be in the Introduction and/or on the ISO list of patent declarations received (see www.iso.org/patents).

Any trade name used in this document is information given for the convenience of users and does not constitute an endorsement.

For an explanation on the meaning of ISO specific terms and expressions related to conformity assessment, as well as information about ISO's adherence to the WTO principles in the Technical Barriers to Trade (TBT) see the following URL: Foreword - Supplementary information

The committee responsible for this document is ISO/TC 108, *Mechanical vibration, shock and condition monitoring*, Subcommittee SC 2, *Measurement and evaluation of mechanical vibration and shock as applied to machines, vehicles and structures* in collaboration with ISO/TC 118, *Compressors and pneumatic tools, machines and equipment*.

ISO 10816 consists of the following parts, under the general title *Mechanical vibration — Evaluation of machine vibration by measurements on non-rotating parts:*

— *Part 1: General guidelines*

— *Part 2: Land-based steam turbines and generators in excess of 50 MW with normal operating speeds of 1500 r/min, 1800 r/min, 3000 r/min and 3600 r/min*

— *Part 3: Industrial machines with nominal power above 15 kW and nominal speeds between 120 r/min and 15 000 r/min when measured in situ*

— *Part 4: Gas turbine sets with fluid-film bearings*

— *Part 5: Machine sets in hydraulic power generating and pumping plants*

— *Part 6: Reciprocating machines with power ratings above 100 kW*

— *Part 7: Rotodynamic pumps for industrial applications, including measurements on rotating shafts*

— *Part 8: Reciprocating compressor systems*

— *Part 21: Horizontal axis wind turbines with gearbox*

© ISO 2014 – All rights reserved
Documents
Document Sharing Hub
Full document details: BS ISO 10816-8:2014

Introduction

ISO 10816-1 gives general guidelines for the evaluation of machine vibration by measurements on non-rotating parts. This part of ISO 10816, however, establishes special procedures and guidelines for the measurement and classification of mechanical vibration of reciprocating compressors. In general, it refers to vibration of the main structure of the compressor, including the foundation, pulsation dampers, and attached pipe system. The guidance values given for these vibrations are defined primarily to classify the vibration and to avoid problems with auxiliary equipment mounted on these structures. Recommendations for measurements and evaluation criteria are provided in this part of ISO 10816.

Typical features of reciprocating compressors are the oscillating masses, the cyclically varying torques, cylinder stretch and the pulsating forces in the cylinders, pulsation dampers, and the pipe system. All these features cause alternating loads on the main supports and vibration of the compressor system. The vibration values of reciprocating compressor systems are generally larger than for rotating compressors but, since they are largely determined by the design features of the compressor, they tend to remain more constant over the life of the system than for rotating machinery.

In the case of reciprocating compressor systems, the vibration measured on the main structure of the compressor (including the foundation, pulsation dampers and piping) and quantified according to this part of ISO 10816 can only give a rough idea of the vibratory states of the components within the machine itself.

The damage, which can occur when exceeding the guidance values based on experience with similar compressor systems, is sustained predominantly by machine-mounted components (e.g. instrumentation, heat exchangers, filters, pumps), connecting elements of the compressor with its peripheral parts (e.g. pipelines) or monitoring instruments (e.g. pressure gauges, thermometers). The question as above which vibration values damage is to be expected largely depends on the design of these components and their fastenings. In some cases, special measurements on certain compressor system components can be required to ascertain that the vibration values do not cause damage. It also happens that even if measured values are within the guidance values of this part of ISO 10816, problems can occur owing to the great variety of components which can be attached.

Local vibration problems as described above can be, and have to be, rectified by specific "local measures" (e.g. by elimination of resonances). Experience has shown, however, that it is possible in the majority of cases to state measurable quantities characterizing the vibratory state and to give guidance values for these. This shows that the measurable variables and the guidance values for acceptable vibration in most cases permit a reliable evaluation.

If the measured vibration values as given in this part of ISO 10816 do not exceed the guidance values, abnormal wear of internal compressor components caused by vibration is unlikely to occur.

The vibration values of reciprocating compressor systems are not only affected by the properties of the compressor itself but also to a large degree by the foundation. Since a reciprocating compressor can act as a vibration generator, vibration isolation between the compressor and its foundation can be necessary. The vibration response of the foundation and the vibration from adjacent equipment can have considerable effect on the vibration of the compressor system.

© ISO 2014 – All rights reserved

Documents
Document Sharing Hub
Full document details: BS ISO 10816-8:2014

Documents
Document Sharing Hub

INTERNATIONAL STANDARD ISO 10816-8:2014(E)

Mechanical vibration — Evaluation of machine vibration by measurements on non-rotating parts —

Part 8: Reciprocating compressor systems

1 Scope

This part of ISO 10816 establishes procedures and guidelines for the measurement and classification of mechanical vibration of reciprocating compressor systems. The vibration values are defined primarily to classify the vibration of the compressor system and to avoid fatigue problems with parts in the reciprocating compressor system, i.e. foundation, compressor, dampers, piping, and auxiliary equipment mounted on the compressor system.

This part of ISO 10816 applies to reciprocating compressors mounted on rigid foundations with typical rotational speed ratings in the range 120 r/min up to and including 1 800 r/min. The general evaluation criteria which are presented relate to operational measurements. The criteria are also used to ensure that machine vibration does not adversely affect the equipment directly mounted on the machine, e.g. pulsation dampers and the pipe system.

NOTE The general guidelines presented in this part of ISO 10816 can also be applied to reciprocating compressors outside the specified speed range but different evaluation criteria might be appropriate in this case.

The machinery driving the reciprocating compressor, however, is evaluated in accordance with the appropriate part of ISO 10816 or other relevant standards and classification for the intended duty. Drivers are not included in this part of ISO 10816.

It is recognized that the evaluation criteria might only have limited application when considering the effects of internal machine components, e.g. problems associated with valves, pistons, and piston rings might be unlikely to be detected in the measurements. Identification of such problems can require investigative diagnostic techniques which are outside the scope of this part of ISO 10816.

Examples of reciprocating compressor systems covered by this part of ISO 10816 are

— horizontal, vertical, V-, W-, and L-type compressor systems,

— constant and variable speed compressors,

— compressors driven by electric motors, gas, and diesel engines, steam turbines, with or without a gearbox, flexible or rigid coupling, and

— dry running and lubricated reciprocating compressors.

This part of ISO 10816 does not apply to hyper compressors.

The guidelines are not intended for condition monitoring purposes. Noise is also outside the scope of this part of ISO 10816.

2 Normative references

The following documents, in whole or in part, are normatively referenced in this document and are indispensable for its application. For dated references, only the edition cited applies. For undated references, the latest edition of the referenced document (including any amendments) applies.

© ISO 2014 – All rights reserved

Documents
Document Sharing Hub
Full document details: BS ISO 10816-8:2014

ISO 2041, *Mechanical vibration, shock and condition monitoring — Vocabulary*

3 Terms and definitions

For the purposes of this document, the terms and definitions given in ISO 2041 and the following apply.

3.1
compressor system
machinery system comprising foundation, compressor (crankcase, crosshead guide, cylinders), pulsation dampers, and piping

3.2
overall vibration value
single numeric representation of a feature or aggregate of features derived from a raw or processed time waveform or frequency spectrum of a vibration signal and often accompanied by descriptive text or indicators to specify methods used in its derivation

Note 1 to entry: The overall vibration value is measured in the frequency range from 2 Hz to 1 000 Hz.

3.3
corner frequency
frequency used to convert the vibration displacement to vibration velocity and vibration velocity to vibration acceleration for a sinusoidal signal

Note 1 to entry: The corner frequencies are 10 Hz and 200 Hz, respectively.

3.4
vendor
manufacturer or manufacturer's agent who supplies the compressor system

3.5
purchaser
agency that issues the order and specification to the vendor

4 Measurements

4.1 Measurement procedure

The primary measurement quantity shall be overall root-mean-square (r.m.s) vibration velocity in mm/s.

If frequencies below the corner frequency of 10 Hz are expected or observed, it is recommended additionally to measure the overall r.m.s vibration displacement in mm (it is also common to display displacement in micrometres where 1 µm = 10^{-3} mm).

If frequencies above the corner frequency of 200 Hz are expected or observed, it is recommended additionally to measure the overall r.m.s vibration acceleration in m/s^2 (it is still common, but not recommended, to display acceleration in units of g where g = 9,81 m/s^2).

NOTE The relationship between displacement, velocity, and acceleration is given in B.1.

Consequently, and in accordance with ISO 10816-1, acceptance criteria based on velocity take the general form of Figures B.1 to B.10. These figures indicate the corner frequencies of 10 Hz and 200 Hz and show that below and above these corner frequencies, the guidance vibration velocity is a function of vibration frequency.

All values shall be within the values for acceptable overall vibration as summarized in 5.3.

Spectral data should be retrieved for each of the measured quantities if they exceed the vibration values of evaluation zone boundary B/C as defined in 5.2 to aid in analysis and possible correction.

© ISO 2014 – All rights reserved
Documents
Document Sharing Hub
Full document details: BS ISO 10816-8:2014

Vibration acceleration values are often measured to carry out condition monitoring of internal compressor components. However, this part of ISO 10816 is not intended to be applied for condition monitoring purposes. For example, if the condition of the compressor valves is to be monitored, other procedures and standards with different values can apply. The vibration acceleration values given in this part of ISO 10816 should, therefore, only serve as a criterion to judge the overall integrity of the compressor system and attached equipment, e.g. pressure and/or temperature transmitters and valve-lifting devices. When the acceleration values given in this part of ISO 10816 are exceeded, this does not, by definition, imply that corrective actions are required. The susceptibility of components to large acceleration values (instruments, heavy components on small equipment nozzles, etc.), the presence of audible noise or knocking sounds, or unusual or sudden changes of vibration values should then become a point of attention and further analysis.

Furthermore, it should be kept in mind that the measured acceleration values on locations as shown in Figures 1 to 5 are not the values of the attached equipment but the values of the compressor system parts (foundation, crankcase, cylinder, dampers, and piping) to which they are mounted.

4.2 Measuring instrumentation and measured quantities

Criteria for classifying vibration values for reciprocating compressor systems are specified in Clause 5. It is recognized that the main excitation frequencies for reciprocating compressor systems are generally found in the range 2 Hz to 300 Hz. However, when considering the complete compressor system, including auxiliary equipment that is a functional part of the compressor, a typical range of 2 Hz to 1 000 Hz is applied to characterize the overall vibration. For the purposes of this part of ISO 10816, the overall r.m.s vibration value shall represent vibration across the frequency range from 2 Hz to 1 000 Hz. For special purposes, a different range can be agreed between the vendor and purchaser.

Since the overall vibration signal usually contains many frequency components, there is no simple mathematical relationship between the r.m.s, peak, or peak-to-peak overall vibration measurements, see Annex D.

The measuring system should provide the r.m.s values of displacement, velocity, and acceleration with an accuracy of ±10 % over the range 10 Hz to 1 000 Hz and with an accuracy of +10 % and –20 % over the range 2 Hz to 10 Hz. These values can be obtained from a single transducer whose signal is processed to derive the quantities not directly measured, preferably an accelerometer whose output is integrated once for velocity and twice for displacement. ISO 2954 gives requirements for instruments for measuring vibration severity. Guidelines on applying methods of signal processing and display, e.g. time and frequency domain, windowing, and averaging, are covered in ISO 13373-2 and ISO 18431-1 and common examples are given in ISO 18431-2.

Care should be taken to ensure that any processing does not adversely affect the required accuracy of the measuring system. Both the frequency response and measured vibration values are affected by the method of attachment of the transducers. It is especially important to maintain a good attachment between the transducer and the compressor when the vibration velocities and frequencies are high. ISO 5348 gives guidelines on the mounting of accelerometers.

NOTE The guidance vibration values are not applicable for ovalling shell modes of pulsation dampers and large diameter pipe systems.

4.3 Locations and direction of measurements

4.3.1 Locations

As a minimum, the vibration measurements shall be carried out on the locations shown in Figures 1 to 5 as follows:

— foundation: at all compressor frame bolt locations;

— frame (top): on each corner point and between all cylinders for a compressor with more than two cylinders, all at the top of the frame;

© ISO 2014 – All rights reserved

Documents
Document Sharing Hub
Full document details: BS ISO 10816-8:2014

— cylinders (lateral and rod): at the rigid part of each cylinder cover flange;

— pulsation vessels: at the inlet and/or outlet pipeline flange and at the heads;

— piping: at all critical parts of the system, to be determined by inspection and in agreement with the purchaser.

NOTE Accelerometers are often mounted on the crosshead guide for condition monitoring purposes of internal parts of the compressor. The vibrations are measured in the direction of the force exerted by the crosshead on this guide, which is in vertical direction of a horizontal compressor. Experience on horizontal compressors has shown that the vibration values measured on the crossheads guide can be used in addition to the vibration values of other locations to judge the integrity of the compressor. The procedures for measuring the vibration values on the crosshead guide are summarized in Annex C.

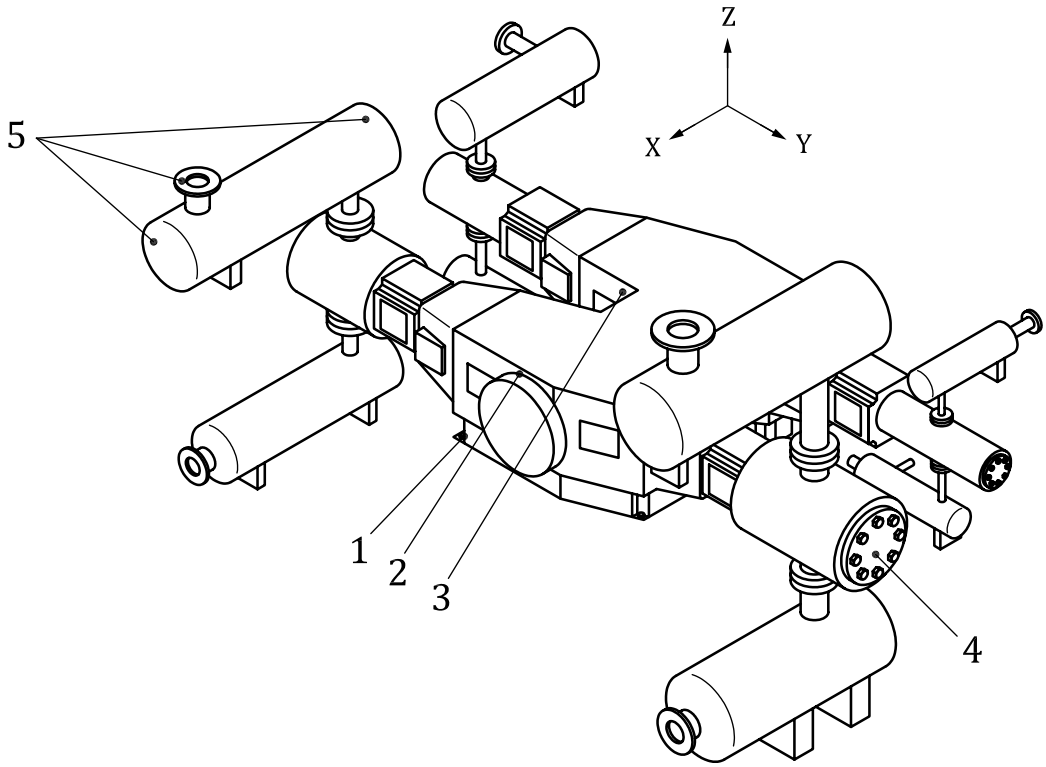

Key

1 all compressor frame bolt locations

2 each frame corner point

3 each frame location between the cylinders (required for a compressor with more than one cylinder)

4 each cylinder (cover flange at rigid location)

5 pulsation vessels (only shown for one vessel in the figure)

NOTE The numbers apply to all types of these compressors (for clarity, only one point is shown in the figure for most of the locations). Piping is not shown in the figure, so point 6 should be agreed upon with the vendor. A detailed description of the directions is given in 4.3.2.

Figure 1 — Measuring locations for a horizontal compressor

© ISO 2014 – All rights reserved
Documents
Document Sharing Hub
Full document details: BS ISO 10816-8:2014