BS ISO 10830:2011

BSI Standards Publication

Space systems — Non-destructive testing — Automatic ultrasonic inspection method of graphite ingot for solid rocket motors

bsi.

...making excellence a habit.™

Document Sharing Hub

National foreword

This British Standard is the UK implementation of ISO 10830:2011.

The UK participation in its preparation was entrusted to Technical Committee ACE/68/-/8, Space systems and operations - Materials and processes.

A list of organizations represented on this committee can be obtained on request to its secretary.

This publication does not purport to include all the necessary provisions of a contract. Users are responsible for its correct application.

© BSI 2011

ISBN 978 0 580 66378 9

ICS 19.100; 49.140

Compliance with a British Standard cannot confer immunity from legal obligations.

This British Standard was published under the authority of the Standards Policy and Strategy Committee on 31 August 2011.

Amendments issued since publication

Date	Text affected

Documents
Document Sharing Hub

Full document details: BS ISO 10830:2011

INTERNATIONAL STANDARD

ISO 10830

First edition
2011-07-15

Space systems — Non-destructive testing — Automatic ultrasonic inspection method of graphite ingot for solid rocket motors

Systèmes spatiaux — Essais non destructifs — Méthode par injection ultrasonique du bloc graphite pour les moteurs de fusée à combustible solide

Reference number
ISO 10830:2011(E)

Documents
Document Sharing Hub

© ISO 2011

Full document details: BS ISO 10830:2011

COPYRIGHT PROTECTED DOCUMENT

© ISO 2011

All rights reserved. Unless otherwise specified, no part of this publication may be reproduced or utilized in any form or by any means, electronic or mechanical, including photocopying and microfilm, without permission in writing from either ISO at the address below or ISO's member body in the country of the requester.

ISO copyright office
Case postale 56 • CH-1211 Geneva 20
Tel. + 41 22 749 01 11
Fax + 41 22 749 09 47
E-mail copyright@iso.org
Web www.iso.org

Published in Switzerland

Documents
Document Sharing Hub
© ISO 2011 – All rights reserved

Full document details: BS ISO 10830:2011

Contents

Page

Foreword iv

Introduction v

1 Scope 1

2 Normative references 1

3 Terms and definitions 1

4 General 4
4.1 Requirements 4
4.2 Test conductor 5

5 Composition of ultrasonic test equipment 5
5.1 Basic composition of equipment 5
5.2 Ultrasonic test instrument 5
5.3 Probe 6
5.4 Scanning equipment 6
5.5 Display and recording equipment 6

6 Preparation of automatic ultrasonic inspection 7
6.1 Reference blocks 7
6.2 Water path 8
6.3 Setting for angle-beam incidence 8
6.4 Scanning zone and gate range 8
6.5 Distance-amplitude correction 9
6.6 Determination of apparent widths of beam spread 9
6.7 Selection of scanning pitch in beam-index scanning 10
6.8 Selection of data collection interval in incident-angle scanning 10
6.9 Required compensation of detection sensitivity 10

7 Procedure for automatic ultrasonic inspection 11
7.1 Test blocks 11
7.2 Test sequence 12

8 Automatic ultrasonic inspection 13
8.1 Preparation for testing 13
8.2 Primary inspection 13
8.3 Secondary inspection 14

9 Acceptance criteria 14

10 Reporting and recording 14
10.1 General 14
10.2 Report of test result 14
10.3 Scanning details and corresponding gate range 14
10.4 Inspection condition data 15
10.5 Secondary inspection details 15

Annex A (normative) **Reference blocks and test method for ultrasonic characteristic determination of graphite ingot** 16

Annex B (normative) **Propagation-characteristic test of graphite ingot** 22

Bibliography 25

© ISO 2011 – All rights reserved

Documents
Document Sharing Hub
Full document details: BS ISO 10830:2011

Foreword

ISO (the International Organization for Standardization) is a worldwide federation of national standards bodies (ISO member bodies). The work of preparing International Standards is normally carried out through ISO technical committees. Each member body interested in a subject for which a technical committee has been established has the right to be represented on that committee. International organizations, governmental and non-governmental, in liaison with ISO, also take part in the work. ISO collaborates closely with the International Electrotechnical Commission (IEC) on all matters of electrotechnical standardization.

International Standards are drafted in accordance with the rules given in the ISO/IEC Directives, Part 2.

The main task of technical committees is to prepare International Standards. Draft International Standards adopted by the technical committees are circulated to the member bodies for voting. Publication as an International Standard requires approval by at least 75 % of the member bodies casting a vote.

Attention is drawn to the possibility that some of the elements of this document may be the subject of patent rights. ISO shall not be held responsible for identifying any or all such patent rights.

ISO 10830 was prepared by Technical Committee ISO/TC 20, *Aircraft and space vehicles*, Subcommittee SC 14, *Space systems and operations*.

© ISO 2011 – All rights reserved
Documents
Document Sharing Hub
Full document details: BS ISO 10830:2011

Introduction

In February 2000, the Institute of Space and Astronautical Science (now Japan Aerospace Exploration Agency) launched an M-V-4 rocket that experienced an unexpected failure. An intensive post-flight study was carried out. It was finally concluded that the failure originated from the fracture of a nozzle throat insert made of graphite[1]. Then, a study of non-destructive inspection was initiated, and the ultrasonic inspection method specified in this International Standard was developed for use on the throat inserts of solid rocket motors.

Graphite materials have been utilized without quantitative non-destructive inspection in many applications, except for one example of the core structure of the High Temperature Engineering Test Reactor (HTTR) of the Japan Atomic Energy Research Institute[2]. There, planar flaws perpendicular to the top, bottom or side surfaces in a cylindrical ingot were targeted. However, for aerospace applications, it is necessary to detect internal planar flaws oriented in various directions.

The method is based on a single-probe, pulse-echo and immersion technique utilizing normal and angle-beam techniques to detect internal planar flaws oriented in various directions. The wave velocity and the attenuation coefficient in the test object are measured before inspection to determine the differences in acoustic properties from ingot to ingot. Incident-angle scanning is adopted in addition to the common beam-axis scanning to detect flaws that can be oriented in various directions. This inspection technique is necessary for inspection of sintered materials in general, including ceramics, and not only for graphite used in solid rocket motors.

The method was first published as JIS Z 2356[3] in 2006 by the Japanese Industrial Standards Committee.

© ISO 2011 – All rights reserved

Documents
Document Sharing Hub
Full document details: BS ISO 10830:2011

Documents
Document Sharing Hub

Full document details: BS ISO 10830:2011

INTERNATIONAL STANDARD ISO 10830:2011(E)

Space systems — Non-destructive testing — Automatic ultrasonic inspection method of graphite ingot for solid rocket motors

1 Scope

This International Standard is applicable to the inspection of isotropic graphite ingots for use in solid rocket motors, in order to detect planar flaws oriented in various directions, using immersion testing by means of a single-probe, pulse-echo ultrasonic method.

2 Normative references

The following referenced documents are indispensable for the application of this document. For dated references, only the edition cited applies. For undated references, the latest edition of the referenced document (including any amendments) applies.

ISO 5577, *Non-destructive testing — Ultrasonic inspection — Vocabulary*

ISO 9712, *Non-destructive testing — Qualification and certification of NDT personnel — General principles*

3 Terms and definitions

For the purposes of this document, the terms and definitions given in ISO 5577 and the following apply.

3.1
beam-index scanning
common scanning method in which a probe (beam index) traverses the test surface of the test block

NOTE Either R-X scanning or R-Z scanning is conducted, depending on the test surface.

3.2
R-X **scanning**
beam-index scanning method that is executed on the top or bottom surface of the test block

NOTE It consists of the traverse translation of the probe in the diametrical direction of the test block and the axial rotation of the test block (see Figure 1).

3.3
R-Z **scanning**
beam-index scanning method that is executed on the side surface of the test block

NOTE It consists of the traverse translation of the probe in the longitudinal direction of the test block and the axial rotation of the test block (see Figure 2).

© ISO 2011 – All rights reserved

Documents
Document Sharing Hub
Full document details: BS ISO 10830:2011

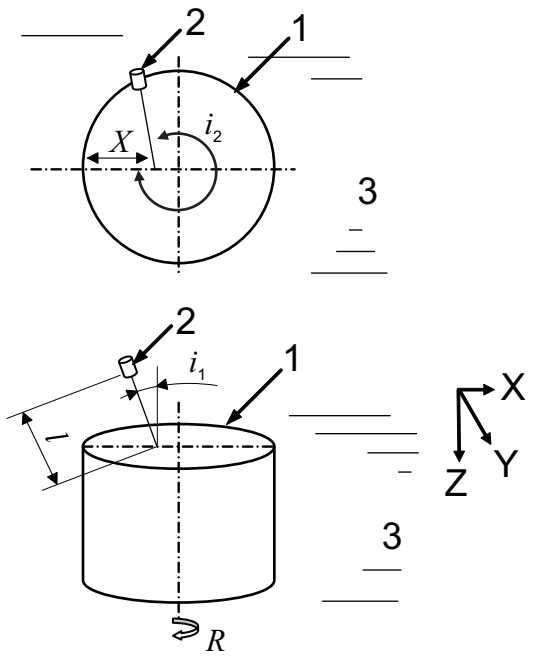

Key

1	test block	i_2	swivel
2	probe	l	water path
3	water	R	rotation
i_1	incident angle	X	transverse

Figure 1 — Schematic diagram of R-X scanning

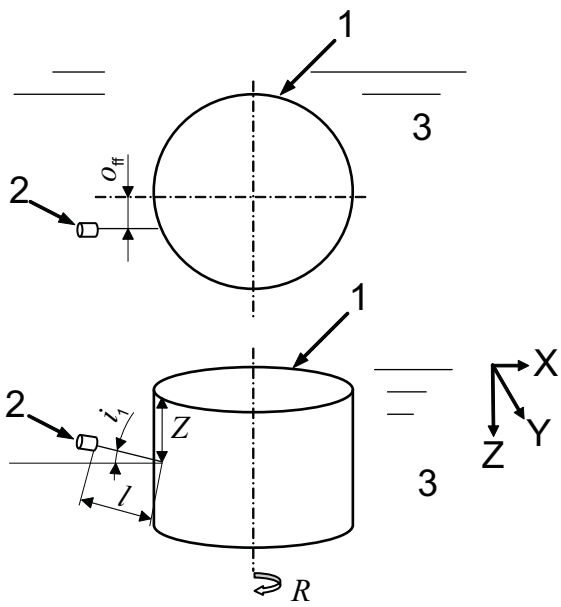

Key

1	test block	l	water path
2	probe	o_{ff}	offset
3	water	R	rotation
i_1	incident angle	Z	transverse

Figure 2 — Schematic diagram of R-Z scanning

Documents
Document Sharing Hub
© ISO 2011 – All rights reserved
Full document details: BS ISO 10830:2011

3.4
incident-angle scanning
scanning method in which the two independent incident angles of a probe are changed sequentially

NOTE Either i_1-i_2 scanning or i_1-o_{ff} scanning is conducted following either an orthogonal scanning or staggered scanning method.

3.5
i_1-i_2 scanning
incident-angle scanning method that is executed on the top or bottom surface of the test block

NOTE It consists of changing the angle of incidence (inclining angle) i_1 and changing the swivel angle i_2 (see Figure 1). R-X scanning is conducted at each setting angle (data collection point).

3.6
i_1-o_{ff} scanning
incident-angle scanning method that is executed on the side surface of the test block

NOTE It consists of changing the longitudinal incident angle i_1 and changing the offset distance o_{ff} (corresponding to the horizontal incident angle, see Figure 2). R-Z scanning is conducted at each setting angle (data collection point).

3.7
orthogonal scanning
scanning method used in incident-angle scanning in which setting angles (data collection points) form a square lattice

3.8
staggered scanning
scanning method used in incident-angle scanning in which setting angles (data collection points) form a hexagonal lattice such that the number of scanning points is less than in the case of orthogonal scanning

NOTE Here, the scanning points are placed in a zigzag position with respect to one another (see Figure 3).

3.9
primary inspection
first of two inspection stages in which scanning is conducted using a relatively large scanning pitch, which corresponds to relatively large apparent widths of beam spread, and at a relatively high level of sensitivity

NOTE This stage identifies suspicious spots to be inspected in the secondary inspection.

3.10
secondary inspection
second of two inspection stages in which scanning is carried out on the spots identified in the primary inspection using a relatively small scanning pitch, which corresponds to relatively small apparent widths of beam spread, but at a relatively low level of sensitivity (lower by the beam-edge compensation than that of the primary inspection), in order to qualify the tested block

3.11
two-axis swivel scanning
swivel scanning in two incident-angle axes to obtain the maximum echo height, compensating for the wave-front fluctuation induced by the uneven ultrasonic propagation characteristics of graphite

NOTE Two-axis swivel scanning is conducted in the survey of echo height of a flat-bottomed hole to set the specified sensitivity.

3.12
planar width of beam spread
transversal range of a beam in which the echo of a flat-bottomed hole equivalent to the flaw to be detected appears at a height above the specified echo level in beam-index scanning

AVA Documents
Document Sharing Hub

© ISO 2011 – All rights reserved

Full document details: BS ISO 10830:2011