BS ISO 10865-2:2015

BSI Standards Publication

# Wheelchair containment and occupant retention systems for accessible transport vehicles designed for use by both sitting and standing passengers

## Part 2: Systems for forward-facing wheelchair-seated passengers

bsi.

...making excellence a habit.™

Document Sharing Hub

## National foreword

This British Standard is the UK implementation of ISO 10865-2:2015.

The UK participation in its preparation was entrusted to Technical Committee CH/173/1, Wheelchairs.

A list of organizations represented on this committee can be obtained on request to its secretary.

This publication does not purport to include all the necessary provisions of a contract. Users are responsible for its correct application.

© The British Standards Institution 2015.
Published by BSI Standards Limited 2015

ISBN 978 0 580 79158 1

ICS 11.180.10; 43.100

**Compliance with a British Standard cannot confer immunity from legal obligations.**

This British Standard was published under the authority of the Standards Policy and Strategy Committee on 30 September 2015.

**Amendments/corrigenda issued since publication**

| Date | Text affected |
|---|---|

Documents
Document Sharing Hub

Full document details: BS ISO 10865-2:2015

# INTERNATIONAL STANDARD

# ISO 10865-2

First edition
2015-09-15

# Wheelchair containment and occupant retention systems for accessible transport vehicles designed for use by both sitting and standing passengers —

## Part 2: Systems for forward-facing wheelchair-seated passengers

*Dispositifs d'immobilisation des fauteuils roulants et systèmes de retenue des occupants pour véhicules accessibles destinés au transport de passagers assis et debout —*

*Partie 2: Systèmes pour les passagers assis dans des fauteuils roulants face à la route*

Reference number
ISO 10865-2:2015(E)

Documents
Document Sharing Hub

© ISO 2015

Full document details: BS ISO 10865-2:2015

**COPYRIGHT PROTECTED DOCUMENT**

© ISO 2015, Published in Switzerland

All rights reserved. Unless otherwise specified, no part of this publication may be reproduced or utilized otherwise in any form or by any means, electronic or mechanical, including photocopying, or posting on the internet or an intranet, without prior written permission. Permission can be requested from either ISO at the address below or ISO's member body in the country of the requester.

ISO copyright office
Ch. de Blandonnet 8 • CP 401
CH-1214 Vernier, Geneva, Switzerland
Tel. +41 22 749 01 11
Fax +41 22 749 09 47
copyright@iso.org
www.iso.org


© ISO 2015 – All rights reserved

Documents
Document Sharing Hub

Full document details: BS ISO 10865-2:2015

# Contents

Page

**Foreword** ... **iv**
**Introduction** ... **v**
**1 Scope** ... **1**
**2 Normative references** ... **1**
**3 Terms and definitions** ... **1**
**4 Design requirements** ... **4**
4.1 Design requirements for a forward-facing wheelchair passenger space (FF-WPS) ... 4
**5 Performance requirements** ... **5**
5.1 Strength of FF-WPS components ... 5
5.2 Wheelchair containment and occupant retention ... 6
5.3 Coefficient of friction of vehicle floor ... 7
**6 Information, identification, and instruction requirements** ... **7**
6.1 Identification and labelling ... 7
6.1.1 Permanent labelling of components ... 7
6.1.2 Identification ... 7
6.1.3 Information for FF-WPS users and vehicle passengers ... 8
6.2 Instructions for installers ... 8
6.2.1 General ... 8
6.2.2 Installation Instructions ... 8
6.2.3 Diagrams, drawings, and signs for installation ... 8
6.2.4 Warnings ... 9
6.3 Instructions for vehicle operators ... 9
**7 Test report and statement requirements** ... **9**
7.1 Test report ... 9
7.2 Statements ... 10
**Annex A** (normative) **Test for wheelchair containment and occupant retention** ... **11**
**Annex B** (normative) **Strength tests for FF-WPS structures** ... **18**
**Annex C** (normative) **Specifications for surrogate wheelchairs** ... **21**
**Annex D** (normative) **Anthropomorphic test device** ... **25**
**Annex E** (informative) **Design of a low-g test apparatus** ... **27**
**Bibliography** ... **30**

© ISO 2015 – All rights reserved


Documents
Document Sharing Hub
Full document details: BS ISO 10865-2:2015

# Foreword

ISO (the International Organization for Standardization) is a worldwide federation of national standards bodies (ISO member bodies). The work of preparing International Standards is normally carried out through ISO technical committees. Each member body interested in a subject for which a technical committee has been established has the right to be represented on that committee. International organizations, governmental and non-governmental, in liaison with ISO, also take part in the work. ISO collaborates closely with the International Electrotechnical Commission (IEC) on all matters of electrotechnical standardization.

The procedures used to develop this document and those intended for its further maintenance are described in the ISO/IEC Directives, Part 1. In particular the different approval criteria needed for the different types of ISO documents should be noted. This document was drafted in accordance with the editorial rules of the ISO/IEC Directives, Part 2 (see www.iso.org/directives).

Attention is drawn to the possibility that some of the elements of this document may be the subject of patent rights. ISO shall not be held responsible for identifying any or all such patent rights. Details of any patent rights identified during the development of the document will be in the Introduction and/or on the ISO list of patent declarations received (see www.iso.org/patents).

Any trade name used in this document is information given for the convenience of users and does not constitute an endorsement.

For an explanation on the meaning of ISO specific terms and expressions related to conformity assessment, as well as information about ISO's adherence to the WTO principles in the Technical Barriers to Trade (TBT) see the following URL: Foreword - Supplementary information

The committee responsible for this document is ISO/TC 173, *Assistive products for persons with disability*, Subcommittee SC 1, *Wheelchairs*.

ISO 10865 consists of the following parts, under the general title *Wheelchair containment and occupant retention systems for accessible transport vehicles designed for use by both sitting and standing passengers*:

— *Part 1: Systems for rearward-facing wheelchair-seated passengers*

— *Part 2: Systems for forward-facing wheelchair-seated passengers*


© ISO 2015 – All rights reserved
Documents
Document Sharing Hub
Full document details: BS ISO 10865-2:2015

# Introduction

Providing safe transportation for wheelchair-seated passengers of motor vehicles usually requires installation of aftermarket equipment to secure the wheelchair and provide passenger restraint during emergency vehicle manoeuvres and crash conditions that are appropriate to the size and travel conditions of the vehicle. ISO 10542-1 establishes design and performance requirements and associated test methods for wheelchair tiedown and occupant restraint systems (WTORS) intended for use by wheelchair-seated passengers in all types of motor vehicles that have been modified for use by people seated in wheelchairs. The provisions of ISO 10542-1 were based on the belief that WTORS manufacturers are not able to control the types of vehicles and travel modes in which most of their products are installed and used. ISO 10542-1 therefore requires frontal sled-impact testing of WTORS to nominally worst-case crash conditions of smaller vehicles, such as full-size vans and minivans, using a simulated crash acceleration/deceleration pulse that results in a change in sled speed (delta V) of 48 km/h.

While this one-size-fits-all approach to WTORS, crashworthiness testing is appropriate for equipment intended for general use in all types of motor vehicles, it generally leads to products that are over designed for larger and heavier vehicles used primarily in low-speed intra-city transportation. This is particularly the case for accessible transit vehicles in which passengers are allowed to travel standing as well as sitting, hereafter referred to as accessible transit vehicles for standing and sitting passengers (ATV-SS).

Recognizing these different and significantly lower transportation safety requirements for ATV-SSs in a new standard can be expected to result in alternative solutions for safely transporting wheelchair-seated passengers in these vehicle environments that are more compatible with the operational needs (e.g. fixed-route schedules) of these transportation services, and that offer wheelchair users a greater level of usability and independence than is achieved with WTORS designed to comply with 48 km/h crash conditions. More specifically, accident/injury data for ATV-SSs indicate that the frequencies of occupant fatalities and serious injuries per million passenger kilometres travelled are significantly lower than for smaller vehicles that travel at much higher speeds.[1] In fact, analysis of data from police reports of accidents involving fixed-route intra-city buses indicates that the likelihood of a collision event for these vehicles is sufficiently rare to justify basing performance requirements for safety equipment installed in these vehicles on accelerations and decelerations that occur during non-crash conditions, such as emergency vehicle manoeuvres, including sudden stopping, sudden acceleration, and turning. Three studies have clearly demonstrated that ATV-SS accelerations that may result from such emergency manoeuvres are all below 1 *g*.[2][3][4]

In-vehicle wheelchair user studies and user surveys have shown that commonly installed 4-point tiedown systems cannot be used independently by wheelchair-seated passengers, and vehicle operators are therefore responsible to secure wheelchairs using a 4-point, strap-type tiedown.[5][6][7] Due to the increasingly independent nature of public vehicles in combination with the length of time it takes to properly apply 4-point tiedown systems to wheelchairs, bus operators and wheelchair users often forfeit the use of strap-type tiedowns or bus operators fail to properly use all four tiedown straps. Unsecured wheelchairs in ATV-SSs have been demonstrated to slide or tip forward during vehicle stops, and wheelchairs rotated into the aisle and scooters tipped sideways during vehicle turns.[4] Additionally, there is anecdotal evidence of wheelchair passengers coming out of their wheelchairs and sustaining serious-to-fatal injuries during normal or sudden vehicle stops and turns due to non-use or improper use of belt restraint systems.

ISO 10542-1 provides design and performance criteria for docking-type tiedown systems which can be independently used by wheelchair users and reduce securement non-use. During in-vehicle observations, wheelchair users have expressed a preference for using a forward-facing automated docking securement system due to its independent and comfortable use, forward-facing travel direction and eliminated need for vehicle operator assistance.[8] However, wide-spread adoption of docking systems for use in ATV-SS cannot occur without the implementation of standardized universal docking interface geometry (described in ISO 10542-1 and ISO 7176-19 as a normative annex) for wheelchair securement on all wheelchairs, which is a long-term goal.

Over the past decade, rear-facing wheelchair passenger spaces (RF-WPS) have emerged in ATV-SSs because they allow independence and ease of use by wheelchair-seated passengers. ISO 10865-1

Documents
Document Sharing Hub

© ISO 2015 – All rights reserved


Full document details: BS ISO 10865-2:2015

includes design requirements and performance criteria for RF-WPS. However, in-vehicle studies have shown that rear-facing travel is, for some people, less comfortable than forward-facing travel due to vertigo[8] and unexpected upper-body and head movements during vehicle stopping and starting.[3] Rear-facing travel also doesn't allow passengers to see stops down the road.

Thus, although RF-WPS may be a safer and more independent solution for wheelchair-seated travellers, forward facing can be the preferred orientation for passengers in ATV-SSs. Also, in the US, the Americans with Disabilities Act (ADA) currently allows rear-facing wheelchair transport but mandates at least one forward-facing WPS in ATV-SSs. Therefore, rear-facing systems only serve part of the wheelchair-seated passenger population who seek safer transportation when using ATV-SSs.

The purpose of this part of ISO 10865 is to establish minimum design requirements and performance criteria for forward-facing wheelchair passenger spaces (FF-WPSs) in ATV-SSs. This part of ISO 10865 also establishes test methods for the performance criteria, so that the passenger sitting in wheelchairs using a FF-WPS are provided a reasonable level of safety during transportation while maintaining a high level of usability and independence during travel in ATV-SSs. Since wheelchair and passenger act as independent systems under different types of vehicle accelerations (braking, accelerating and turning), a dynamic (non-static) test is required and described in Annex A. Furthermore, since manufacturers may design a close-fitting means of occupant retention to retain a wheelchair passenger, the dynamic test method of Annex A requires the use of a test dummy that represents the anthropometrics of an average passenger seated in a wheelchair. A fundamental principle behind the concept of a FF-WPS in ATV-SSs is that successful "containment" of an occupied wheelchair during normal travel and emergency vehicle manoeuvres is sufficient to provide a reasonable level of safety, that is, a level of safety comparable to that provided to other vehicle occupants, including standing passengers, who hold onto bars and straps to limit movement during non-crash vehicle accelerations and decelerations.

The primary feature of a FF-WPS required by this part of ISO 10865 is a means to prevent forward movement of wheelchairs and their occupants during vehicle decelerations that occur in normal or emergency braking. Lateral movement, rotation, and tipping of occupied wheelchairs in a FF-WPS are typically limited in one direction by the vehicle sidewall. Lateral movement, rotation, or tipping of the wheelchair into the centre aisle can be limited by a physical barrier, such as a vertical bar, horizontal bar or padded stanchion. During motor vehicle acceleration, wheelchair movement toward the rear of the motor vehicle can occur. This movement is limited, in part, by friction of the vehicle floor within the FF-WPS that will generate resistance forces on the tyres of wheels that have been locked by applying the wheelchair brakes or by the drive train of powered wheelchairs for which the power has been turned off during travel. Due to insufficient resistance to rearward movement from manual brakes, FF-WPS must also provide other means for limiting rearward wheelchair movement. For example, rearward wheelchair movement can be limited by vehicle-anchored wheelchair containment devices, such as a bar or raised padded area behind the wheelchair), a wheel "capturing" device, or a hook-type device that is within easy reach and that can be secured to the wheelchair by most wheelchair passengers.

Belt type occupant restraints have been provided in ATV-SSs to reduce the risk of injury among wheelchair passengers during travel. However, studies indicate that these belt-type occupant restraints are rarely used or are used improperly in ATV-SSs.[5][7][9] Belt-type restraints are also not commonly designed for independent use by most wheelchair-seated passengers seated in forward-facing wheelchairs.[5][10] When vehicle-anchored occupant belt restraints are not used, wheelchair passenger retention during vehicle decelerations during (braking) and during lateral vehicle decelerations during (turning) may be provided by wheelchair seating system supports such as the wheelchair armrests, and chest and pelvic support devices. However, lateral retention of the wheelchair passenger can be enhanced by FF-WPS components that limit lateral movement, and by occupant-retention devices (ORD). Retention of the occupant in their wheelchair is important to reduce the risk of serious injuries in low-*g* non-crash events. An ORD can reduce forward occupant movement in the vehicle and prevent wheelchair occupants from injurious impacts with the vehicle interior, such as the floor, sidewalls, or other interior components. The use of wheelchair-anchored postural pelvic belts will generally provide effective occupant retention during non-crash vehicle accelerations and decelerations and this practice is therefore encouraged in requirements for user warnings displayed in the FF-WPS. This part of ISO 10865 also requires a vehicle-anchored ORD that can be easily moved out of the way by most wheelchair passengers when its use it not desired. It also specifies design and location requirements for


© ISO 2015 – All rights reserved
Documents
Document Sharing Hub
Full document details: BS ISO 10865-2:2015

handholds that can be used by many wheelchair passengers to augment containment of the wheelchair and enhance occupant retention and stability of the wheelchair passenger during travel.

Research has indicated that a frontal 48 km/h collision of a typical stationary ATV-SS and a full-size automobile generates peak accelerations of the ATV-SS in the range of 2,75 *g* to 3 *g*.[11] The risk of such a frontal collision is small but could occur and the static strength requirements of the excursion barriers and occupant retention device (ORD) are therefore, based on forces that may occur during a 3 *g* frontal impact of an ATV-SS. This part of ISO 10865 sets forth performance requirements and associated test methods to assess whether the components of an FF-WPS effectively limit forward, rearward, and lateral movement, rotation, and tipping of occupied wheelchairs in non-collision vehicle accelerations of less than 1 *g*. The test methods for wheelchair containment are set forth in Annex A are for non-collision vehicle accelerations and decelerations of less than 1 *g*, while Annex B specifies strength testing of the FF-WPS based on 3 *g* wheelchair-plus-occupant frontal-impact loading.

This part of ISO 10865 specifies a limited number of design requirements on FF-WPS to ensure that FF-WPS accommodate a wide range of wheelchair types and sizes and a wide range of wheelchair users. It primarily sets forth performance requirements and associated test methods to assess whether the combination of FF-WPS components will effectively contain wheelchairs and retain passengers seated in wheelchairs during vehicle accelerations and decelerations when vehicles are accelerated to increase speed, are braked to avoid a collision, or driven around a turn at a relatively high speed. FF-WPS may also be equipped with a wheelchair tiedown and occupant restraint system or may be designed to serve as a RF-WPS, but requirements and specifications for these systems are specified in ISO 10542-1 and ISO 10865-1, respectively.

© ISO 2015 – All rights reserved

Documents
Document Sharing Hub
Full document details: BS ISO 10865-2:2015

Documents
Document Sharing Hub

Full document details: BS ISO 10865-2:2015

INTERNATIONAL STANDARD ISO 10865-2:2015(E)

# Wheelchair containment and occupant retention systems for accessible transport vehicles designed for use by both sitting and standing passengers —

# Part 2: Systems for forward-facing wheelchair-seated passengers

## 1 Scope

This part of ISO 10865 applies to wheelchair passenger spaces that are intended for use by passengers with a body mass greater than 22 kg who remain in their wheelchairs when travelling facing forward in accessible transport vehicles designed to transport both standing and sitting passengers on fixed-route service. It assumes that the maximum acceleration imparted to the vehicle during emergency driving manoeuvres will not exceed 1 *g* in any direction and rarely exceeds 3 *g* in frontal crashes. For the purposes of this part of ISO 10865, the term wheelchair includes manual and powered wheelchairs, and three and four wheeled scooters.

This part of ISO 10865 specifies performance requirements and associated test methods, design requirements, requirements for manufacturer instructions and warnings to installers, wheelchair users, and vehicle operators, and requirements for product labelling and disclosure of test information.

The provisions of this part of ISO 10865 apply primarily to a complete forward-facing wheelchair passenger space (FF-WPS), but subsets of the provisions can be applied to components and subassemblies sold separately, as appropriate to the specific functions of the components and/or subassemblies they are intended to replace.

## 2 Normative references

The following documents, in whole or in part, are normatively referenced in this document and are indispensable for its application. For dated references, only the edition cited applies. For undated references, the latest edition of the referenced document (including any amendments) applies.

ISO 3795, *Road vehicles, and tractors and machinery for agriculture and forestry — Determination of burning behaviour of interior materials*

ISO 7176-26, *Wheelchairs — Part 26: Vocabulary*

ISO 10542-1, *Technical systems and aids for disabled or handicapped persons — Wheelchair tiedown and occupant-restraint systems — Part 1: Requirements and test methods for all systems*

## 3 Terms and definitions

For the purposes of this document, the terms and definitions given in ISO 7176-26 and the following apply.

**3.1**
**accelerometer reference point**
**ARP**
location of the accelerometer relative to the wheelchair reference point

© ISO 2015 – All rights reserved



Documents
Document Sharing Hub
Full document details: BS ISO 10865-2:2015

**3.2**
**accessible transport vehicle for seated and standing passengers**
**ATV-SS**
motor vehicle designed and manufactured to provide transport services for primarily seated and standing passengers with provision for the needs of persons with disabilities who remain seated in their wheelchairs during travel

**3.3**
**ambulatory passengers**
passengers who do not require the use of a wheelchair

**3.4**
**anthropomorphic test device**
**ATD**
physical analog of the human body comprised of articulated segments that is designed to simulate the response of an occupant of particular size and mass distribution in a simulated crash

**3.5**
**forward-facing wheelchair passenger space**
**FF-WPS**
location in a large transport vehicle that limits movement of an occupied forward-facing wheelchair and retains wheelchair occupants through the use of structures and devices that do not require the physical attachment of wheelchair-securement or occupant-restraint devices by the vehicle operator

**3.6**
**frontal wheelchair reference plane**
vertical plane going through point P and perpendicular to the centre line of the wheelchair

Note 1 to entry: See Figure 1.

**3.7**
**gross vehicle weight rating**
**GVWR**
maximum total weight, as determined by vehicle manufacturer, at which the vehicle can be safely and reliably operated for its intended purpose

**3.8**
**ground reference point G**
reference point on the ground plane that is positioned vertically below point P under pre-test conditions

Note 1 to entry: See Figure 1.

**3.9**
**H-point**
one of a pair of points located on the left and right sides of the pelvic region of an anthropomorphic test device (ATD) that represent the approximate locations of the human hip joint centre in the side view, as specified by the ATD manufacturer

**3.10**
**handhold (grab bar, handrail)**
any device on board a transport vehicle that is designed to allow passengers to use their hand grip to manoeuvre through the vehicle or provide passengers with a more stable ride while on board the vehicle

**3.11**
**lateral wheel base**
sideways (left to right) distance between the centre of treads of wheels (or tyres) measured on the ground plane


© ISO 2015 – All rights reserved
Documents
Document Sharing Hub
Full document details: BS ISO 10865-2:2015

**3.12**
**occupant retention device**
**ORD**
system or device used to retain the occupant of the wheelchair in a low-g environment

**3.13**
**point P**
side-view projection of a point that lies at the cross-sectional centre of a 100 mm diameter, 200 mm long, lightweight (max. 0,5 kg) cylinder positioned with the longitudinal axis perpendicular to the wheelchair reference plane, such that the curved surface of the cylinder contacts the back support and the upper surface of the seat

Note 1 to entry: See Figure 1.

**3.14**
**rear facing wheelchair passenger space**
**RF-WPS**
location in a large transport vehicle that limits movement of an occupied rearward-facing wheelchair through the use of structures and devices that do not require the physical attachment of wheelchair securement devices by the wheelchair user or vehicle operator

**3.15**
**seat bight height**
vertical distance from floor to the intersection of the seat and back planes of a wheelchair

**3.16**
**manual surrogate wheelchair**
**MSWC**
reusable manual wheelchair device that conforms with Annex C and that is used to simulate a production manual wheelchair for the purpose of Annex A wheelchair containment and occupant retention testing

**3.17**
**scooter surrogate wheelchair**
**SSWC**
reusable scooter-type device that conforms with Annex C and that is used to simulate a production scooter for the purpose of Annex A wheelchair containment and occupant retention testing

**3.18**
**wheelchair reference plane**
vertical plane in the longitudinal centreline of the wheelchair

Note 1 to entry: See Figure 1.

© ISO 2015 – All rights reserved

Documents
Document Sharing Hub
Full document details: BS ISO 10865-2:2015

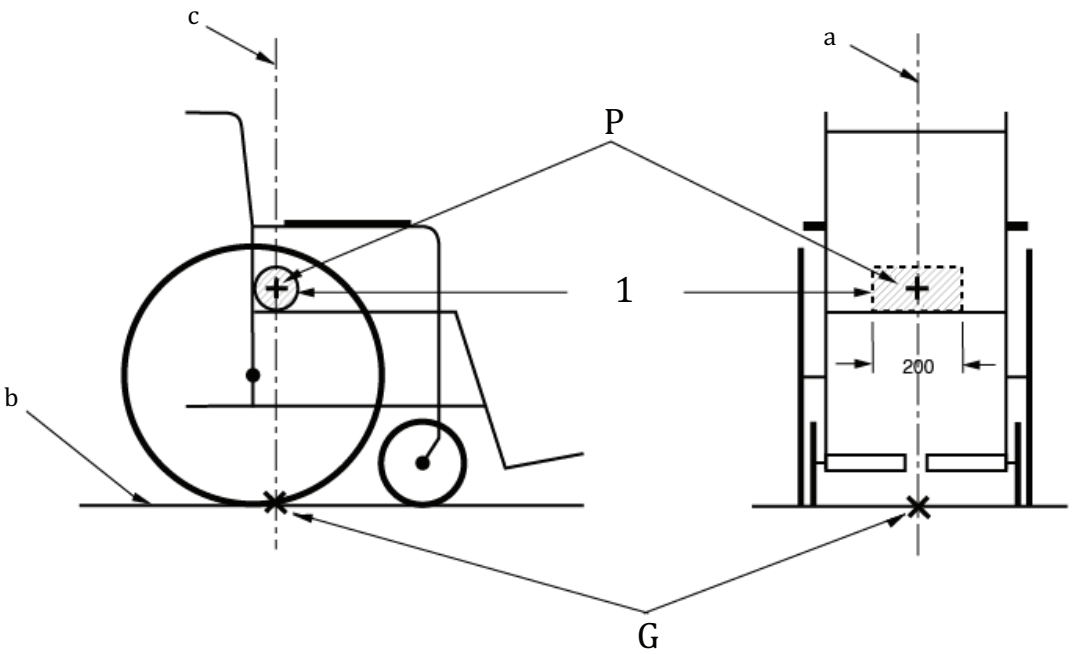


**Key**

1 cylinder, diameter 100 mm

G ground reference point G

P point P

a Wheelchair reference plane.

b Ground plane.

c Frontal wheelchair reference plane.

**Figure 1 — Wheelchair reference point P, ground reference point G and wheelchair reference planes**

# 4 Design requirements

## 4.1 Design requirements for a forward-facing wheelchair passenger space (FF-WPS)

A forward-facing wheelchair passenger space (FF-WPS) shall have the following:

a) designed to fit within a minimum area of 750 mm × 1 300 mm;

b) designed to

1) limit forward, lateral, and rearward wheelchair movement relative to the vehicle during normal travel and emergency vehicle manoeuvres,

NOTE The vehicle wall could be the means to limit lateral wheelchair movement in one direction. This means may also aid in the retention of the wheelchair-seated occupant under lateral accelerations associated with a vehicle turn.


© ISO 2015 – All rights reserved
Documents
Document Sharing Hub
Full document details: BS ISO 10865-2:2015