BS ISO 10896-1:2020

BSI Standards Publication

Rough-terrain trucks — Safety requirements and verification

Part 1: Variable-reach trucks

Documents
Document Sharing Hub

Full document details: BS ISO 10896-1:2020

National foreword

This British Standard is the UK implementation of ISO 10896-1:2020.

The UK participation in its preparation was entrusted to Technical Committee MHE/7, Industrial trucks.

A list of organizations represented on this committee can be obtained on request to its secretary.

This publication does not purport to include all the necessary provisions of a contract. Users are responsible for its correct application.

© The British Standards Institution 2020
Published by BSI Standards Limited 2020

ISBN 978 0 539 00101 3

ICS 53.060

Compliance with a British Standard cannot confer immunity from legal obligations.

This British Standard was published under the authority of the Standards Policy and Strategy Committee on 30 April 2020.

Amendments/corrigenda issued since publication

Date	Text affected

Documents
Document Sharing Hub

Full document details: BS ISO 10896-1:2020

INTERNATIONAL STANDARD

ISO 10896-1

Second edition
2020-04

Rough-terrain trucks — Safety requirements and verification —

Part 1: Variable-reach trucks

Chariots tout-terrain — Exigences de sécurité et vérification —

Partie 1: Chariots à portée variable

Reference number
ISO 10896-1:2020(E)

Documents
Document Sharing Hub
© ISO 2020

Full document details: BS ISO 10896-1:2020

COPYRIGHT PROTECTED DOCUMENT

© ISO 2020

All rights reserved. Unless otherwise specified, or required in the context of its implementation, no part of this publication may be reproduced or utilized otherwise in any form or by any means, electronic or mechanical, including photocopying, or posting on the internet or an intranet, without prior written permission. Permission can be requested from either ISO at the address below or ISO's member body in the country of the requester.

ISO copyright office
CP 401 • Ch. de Blandonnet 8
CH-1214 Vernier, Geneva
Phone: +41 22 749 01 11
Fax: +41 22 749 09 47
Email: copyright@iso.org
Website: www.iso.org

Published in Switzerland

© ISO 2020 – All rights reserved

Documents
Document Sharing Hub

Full document details: BS ISO 10896-1:2020

Contents

Page

Foreword ... **vi**
Introduction ... **vii**
1 Scope ... **1**
2 Normative references ... **2**
3 Terms and definitions ... **3**
4 Safety requirements and/or protective/risk reduction measures ... **8**
4.1 General ... 8
4.1.1 General ... 8
4.1.2 Sharp edges and acute angles ... 8
4.1.3 Stored energy components ... 8
4.2 Starting/moving and stopping ... 8
4.2.1 Unauthorized starting ... 8
4.2.2 Stopping system ... 8
4.2.3 Unintended movement ... 8
4.2.4 Uncontrolled motion ... 9
4.2.5 Powered travel movement ... 9
4.2.6 Non-activation of the parking brake ... 9
4.2.7 Brakes ... 9
4.3 Electrical and electronic systems ... 9
4.3.1 General ... 9
4.3.2 Degree of protection ... 10
4.3.3 Electrical connections ... 10
4.3.4 Batteries ... 11
4.4 Controls ... 11
4.4.1 General ... 11
4.4.2 Multiple operating positions ... 13
4.4.3 Controls of trucks accessible from ground level ... 13
4.4.4 Inadvertent activation ... 13
4.4.5 Travel controls ... 13
4.4.6 Differential locking ... 15
4.4.7 Steering controls ... 15
4.4.8 Load-handling controls ... 16
4.4.9 Multi-function controls ... 17
4.4.10 Stabilizing device control ... 17
4.4.11 Sway/levelling control ... 17
4.4.12 Axle oscillation locking-mechanism control ... 17
4.4.13 Hand throttle control ... 17
4.5 Power systems and accessories ... 17
4.5.1 Exhaust systems ... 17
4.5.2 Cooling systems ... 18
4.5.3 Tanks and pressure vessels ... 18
4.6 Stabilizing devices ... 18
4.7 Design requirements for maintenance purposes ... 19
4.7.1 General ... 19
4.7.2 Tiltable cab support device ... 19
4.8 Systems for lifting, tilting and reaching ... 19
4.8.1 Chains and wire ropes ... 19
4.8.2 Hydraulic system ... 20
4.8.3 Maximum load-lowering speed ... 21
4.8.4 Limitation of stroke ... 21
4.8.5 Fork arms, attachments and attachment brackets ... 21
4.9 Operator's station ... 21
4.9.1 General requirements ... 21

AVA Documents
Document Sharing Hub

© ISO 2020 – All rights reserved

Full document details: BS ISO 10896-1:2020

4.9.2 Storage of operator's manual ... 21
4.9.3 Hot parts ... 21
4.9.4 Pipes and hoses ... 22
4.9.5 Operator's station equipped with enclosed cab ... 22
4.9.6 Operator's seat ... 24
4.9.7 Control panels and symbols on displays ... 25
4.9.8 Other indicating devices ... 25
4.10 Operator access ... 25
4.10.1 General requirements ... 25
4.10.2 Enclosed cab openings ... 25
4.11 Protective measures and devices ... 26
4.11.1 Hot parts ... 26
4.11.2 Protection against crushing, shearing and trapping ... 26
4.11.3 Guards ... 26
4.11.4 Engine compartment ... 26
4.11.5 Fenders ... 27
4.11.6 Roll-over protective structures (ROPS) and falling object protective structures (FOPS) ... 27
4.11.7 Elevating and/or tiltable operator's station ... 27
4.11.8 Audible warning devices ... 27
4.12 Stability ... 27
4.12.1 Stability tests on tilting platform ... 27
4.12.2 Longitudinal load moment control ... 27
4.13 Visibility ... 27
4.14 External lighting devices ... 27
4.15 Fire protection ... 28
4.15.1 Fire resistance ... 28
4.15.2 Fire extinguisher ... 28
4.16 Retrieval, transportation, lifting and towing ... 28
4.16.1 General ... 28
4.16.2 Retrieval ... 28
4.16.3 Tie-down ... 28
4.16.4 Lifting ... 28
4.16.5 Towing ... 28
4.17 Noise ... 28
4.18 Electromagnetic compatibility ... 29

5 Verification of requirements and safety measures ... 29
5.1 General ... 29
5.2 Functional verification ... 29
5.3 Structural verification ... 29
5.3.1 Test loads ... 29
5.3.2 Static test ... 29
5.3.3 Dynamic testing ... 30
5.4 Load holding verification ... 30
5.5 Maximum load lowering speed ... 30

6 Information for use ... 31
6.1 Instruction handbook ... 31
6.1.1 General ... 31
6.1.2 Operating and maintenance instructions ... 31
6.1.3 Instructions regarding the truck ... 32
6.1.4 Instructions regarding the operational use of the truck ... 32
6.1.5 Instructions regarding internal combustion engine trucks ... 33
6.1.6 Instructions regarding transportation and storage of trucks ... 33
6.1.7 Instructions regarding inspection and routine maintenance ... 33
6.2 Graphical symbols and warnings ... 34
6.2.1 Safety signs and graphical symbols ... 34
6.2.2 Graphical symbols lift point ... 34

AVA Documents
Document Sharing Hub

© ISO 2020 – All rights reserved

Full document details: BS ISO 10896-1:2020

6.2.3 Graphical symbols tie-down point ... 34
6.2.4 Graphical symbols of retrieval point ... 34
6.2.5 Graphical symbols for pneumatic tyre inflation pressures ... 35
6.2.6 Graphical symbol for fuel filling points ... 35
6.2.7 Graphical symbol for hydraulic fluid filling points ... 35
6.2.8 Graphical symbol for stored energy components ... 36
6.2.9 Graphical symbol for brake fluid filling points ... 36
6.2.10 Graphical symbol for battery disconnection ... 36
6.2.11 Warnings ... 36
6.3 Marking ... 37
6.3.1 Manufacturer plate(s) ... 37
6.4 Load charts ... 37
6.4.1 Trucks with load-carrying attachments ... 37
6.4.2 Trucks with non-load-carrying attachments ... 38

Annex A (informative) **List of significant hazards** ... **39**

Annex B (normative) **Attachments and attachment brackets** ... **43**

Annex C (normative) **Elevating operator's stations** ... **46**

Bibliography ... **48**

© ISO 2020 – All rights reserved

Documents
Document Sharing Hub
Full document details: BS ISO 10896-1:2020

Foreword

ISO (the International Organization for Standardization) is a worldwide federation of national standards bodies (ISO member bodies). The work of preparing International Standards is normally carried out through ISO technical committees. Each member body interested in a subject for which a technical committee has been established has the right to be represented on that committee. International organizations, governmental and non-governmental, in liaison with ISO, also take part in the work. ISO collaborates closely with the International Electrotechnical Commission (IEC) on all matters of electrotechnical standardization.

The procedures used to develop this document and those intended for its further maintenance are described in the ISO/IEC Directives, Part 1. In particular, the different approval criteria needed for the different types of ISO documents should be noted. This document was drafted in accordance with the editorial rules of the ISO/IEC Directives, Part 2 (see www.iso.org/directives).

Attention is drawn to the possibility that some of the elements of this document may be the subject of patent rights. ISO shall not be held responsible for identifying any or all such patent rights. Details of any patent rights identified during the development of the document will be in the Introduction and/or on the ISO list of patent declarations received (see www.iso.org/patents).

Any trade name used in this document is information given for the convenience of users and does not constitute an endorsement.

For an explanation of the voluntary nature of standards, the meaning of ISO specific terms and expressions related to conformity assessment, as well as information about ISO's adherence to the World Trade Organization (WTO) principles in the Technical Barriers to Trade (TBT) see www.iso.org/iso/foreword.html.

Any feedback or questions on this document should be directed to the user's national standards body. A complete listing of these bodies can be found at www.iso.org/members.html.

This document was prepared by Technical Committee ISO/TC 110, *Industrial trucks*, Subcommittee SC 4, *Rough-terrain trucks*.

This second edition cancels and replaces the first edition (ISO 10896-1:2012), which has been technically revised.

The main changes compared to the previous edition are as follows:

— the document has been aligned with regional standards;

— a new steering test has been added;

— new requirements for the hydraulic circuit have been introduced.

A list of all parts in the ISO 10896 series can be found on the ISO website.

© ISO 2020 – All rights reserved
Documents
Document Sharing Hub
Full document details: BS ISO 10896-1:2020

Introduction

This document is a type-C standard as stated in ISO 12100.

This document is of relevance, in particular, for the following stakeholder groups representing the market players with regard to machinery safety:

— machine manufacturers (small, medium and large enterprises);

— health and safety bodies (regulators, accident prevention organisations, market surveillance etc.)

Others can be affected by the level of machinery safety achieved with the means of the document by the above-mentioned stakeholder groups:

— machine users/employers (small, medium and large enterprises);

— machine users/employees (e.g. trade unions, organizations for people with special needs);

— service providers, e. g. for maintenance (small, medium and large enterprises);

— consumers (in case of machinery intended for use by consumers).

The above-mentioned stakeholder groups have been given the possibility to participate at the drafting process of this document.

The machinery concerned and the extent to which hazards, hazardous situations or hazardous events are covered are indicated in the Scope of this document.

When requirements of this type-C standard are different from those which are stated in type-A or type-B standards, the requirements of this type-C standard take precedence over the requirements of the other standards for machines that have been designed and built according to the requirements of this type-C standard.

This document has been developed in order to align as far as possible its requirements to those of the applicable regional standards in Australia, EU, USA.

© ISO 2020 – All rights reserved

Documents
Document Sharing Hub
Full document details: BS ISO 10896-1:2020

Documents
Document Sharing Hub

Rough-terrain trucks — Safety requirements and verification —

Part 1: Variable-reach trucks

1 Scope

This document specifies general safety requirements for non-slewing, rough-terrain variable-reach trucks (referred to as trucks), with rigid chassis and equipped with a telescopic lifting means (pivoting boom) on which a load-handling device such as a carriage with fork arms is typically fitted. Fork arms and other integrated attachments are considered to be parts of the truck.

NOTE These trucks are also known as telehandlers, or telescopic handlers.

For the purpose of this document, trucks are designed to transport, lift and place loads and can be driven on unimproved terrain. They can also be equipped with a variety of attachments or interchangeable equipment (e.g. fork arms, bale spikes, mowers, sweepers) which can be both load-carrying and non-load-carrying.

Other standards, in addition to the relevant provisions of this document, can apply to the attachments.

This document is not applicable to the following:

a) industrial variable-reach trucks covered by ISO 3691-2;

b) machines designed primarily for earth moving, such as loaders, even if their buckets are replaced by fork arms (see ISO 20474-3);

c) trucks with articulated chassis;

d) machines designed primarily with variable-length load suspension elements (e.g. chain, ropes) from which the load can swing freely in all directions (mobile cranes);

e) trucks fitted with personnel/work platforms, designed to move persons to elevated working positions;

f) trucks designed primarily for container handling.

The significant hazards covered by this document are listed in Annex A. This document does not address hazards that can occur:

— during manufacture;

— when handling suspended loads, which can swing freely (see ISO 10896-4);

— when using trucks on public roads;

— when operating in potentially explosive atmospheres;

— with a battery, LPG or hybrid as the primary power source.

© ISO 2020 – All rights reserved

Documents
Document Sharing Hub
Full document details: BS ISO 10896-1:2020

2 Normative references

The following documents are referred to in the text in such a way that some or all of their content constitutes requirements of this document. For dated references, only the edition cited applies. For undated references, the latest edition of the referenced document (including any amendments) applies.

ISO 2330, *Fork-lift trucks — Fork arms — Technical characteristics and testing*

ISO 2860, *Earth-moving machinery — Minimum access dimensions*

ISO 2867:2011, *Earth-moving machinery — Access systems*

ISO 3449, *Earth-moving machinery — Falling-object protective structures — Laboratory tests and performance requirements*

ISO 3457, *Earth-moving machinery — Guards — Definitions and requirements*

ISO 3471:2008, *Earth-moving machinery — Roll-over protective structures — Laboratory tests and performance requirements*

ISO 3795, *Road vehicles, and tractors and machinery for agriculture and forestry — Determination of burning behaviour of interior materials*

ISO 3864-1, *Graphical symbols — Safety colours and safety signs — Part 1: Design principles for safety signs and safety markings*

ISO 3864-2, *Graphical symbols — Safety colours and safety signs — Part 2: Design principles for product safety labels*

ISO 5053-1, *Industrial trucks — Terminology and classification — Part 1: Types of industrial trucks*

ISO 5353, *Earth-moving machinery, and tractors and machinery for agriculture and forestry — Seat index point*

ISO 6016, *Earth-moving machinery — Methods of measuring the masses of whole machines, their equipment and components*

ISO 6292:2020, *Powered industrial trucks and tractors — Brake performance and component strength*

ISO 6682, *Earth-moving machinery — Zones of comfort and reach for controls*

ISO 6683, *Earth-moving machinery — Seat belts and seat belt anchorages — Performance requirements and tests*

ISO 7000, *Graphical symbols for use on equipment — Registered symbol*

ISO 7096, *Earth-moving machinery — Laboratory evaluation of operator seat vibration*

ISO 9533, *Earth-moving machinery — Machine-mounted audible travel alarms and forward horns — Test methods and performance criteria*

ISO 10263-3, *Earth-moving machinery — Operator enclosure environment — Part 3: Pressurization test method*

ISO 10263-4, *Earth-moving machinery — Operator enclosure environment — Part 4: Heating, ventilating and air conditioning (HVAC) test method and performance*

ISO 10896-6, *Rough-terrain trucks — Safety requirements and verification — Part 6: Tilting operator's cabs*

ISO 10896-7, *Rough-terrain trucks — Safety requirements and verification — Part 7: Longitudinal load moment systems*

ISO 11112, *Earth-moving machinery — Operator's seat — Dimensions and requirements*

© ISO 2020 – All rights reserved
Documents
Document Sharing Hub
Full document details: BS ISO 10896-1:2020

ISO 12508, *Earth-moving machinery — Operator station and maintenance areas — Bluntness of edges*

ISO 13284, *Fork-lift trucks — Fork-arm extensions and telescopic fork arms — Technical characteristics and strength requirements*

ISO 13732-1, *Ergonomics of the thermal environment — Methods for the assessment of human responses to contact with surfaces — Part 1: Hot surfaces*

ISO 13766-1, *Earth-moving and building construction machinery — Electromagnetic compatibility (EMC) of machines with internal electrical power supply — Part 1: General EMC requirements under typical electromagnetic environmental conditions*

ISO 13849-1, *Safety of machinery — Safety-related parts of control systems — Part 1: General principles for design*

ISO 13850, *Safety of machinery — Emergency stop function — Principles for design*

ISO 15817, *Earth-moving machinery — Safety requirements for remote operator control systems*

ISO 15818, *Earth-moving machinery — Lifting and tying-down attachment points — Performance requirements*

ISO 18063-1, *Rough-terrain trucks — Visibility test methods and their verification — Part 1: Variable-reach trucks*

ISO 21507, *Earth-moving machinery — Performance requirements for non-metallic fuel tanks*

ISO 22915-10, *Industrial trucks — Verification of stability — Part 10: Additional stability test for trucks operating in the special condition of stacking with load laterally displaced by powered devices*

ISO 22915-14, *Industrial trucks — Verification of stability — Part 14: Rough-terrain variable-reach trucks*

ISO 22915-20, *Industrial trucks — Verification of stability — Part 20: Additional stability test for trucks operating in the special condition of offset load, offset by utilization*

ISO 19014-1, *Earth-moving machinery — Functional safety — Part 1: Methodology to determine safety-related parts of the control system and performance requirements*

ISO 4413:2010, *Hydraulic fluid power — General rules and safety requirements for systems and their components*

ISO 13857, *Safety of machinery — Safety distances to prevent hazard zones being reached by upper and lower limbs*

ISO 12100, *Safety of machinery — General principles for design — Risk assessment and risk reduction*

IEC 60529, *Degrees of protection provided by enclosures (IP Code)*

EN 12053, *Safety of industrial trucks — Test methods for measuring noise emissions*

EN 12895, *Industrial trucks — Electromagnetic compatibility*

ANSI B56.11.5, *Measurement of Sound Emitted by Low Lift, High Lift, and Rough Terrain Powered Industrial Trucks*

3 Terms and definitions

For the purposes of this document, the terms and definitions given in ISO 5053-1 and the following apply.

ISO and IEC maintain terminological databases for use in standardization at the following addresses:

— IEC Electropedia: available at http://www.electropedia.org

© ISO 2020 – All rights reserved

Documents
Document Sharing Hub
Full document details: BS ISO 10896-1:2020

— ISO Online browsing platform: available at http://www.iso.org/obp

3.1
rough-terrain truck
truck designed for operation on unimproved natural terrain as well as the disturbed terrain of work sites

3.2
compact truck
truck having a maximum height in normal travel mode not exceeding 2 150 mm, a maximum operating mass according to ISO 6016 not exceeding 6 000 kg, and a maximum width in normal travel mode not exceeding 1 850 mm

3.3
rated capacity
Q_1
<truck> maximum load permitted by the manufacturer at the standard load centre distance that the truck is capable of lifting and transporting on *fork arms* (3.13) in normal conditions with the *boom* (3.14) fully retracted

Note 1 to entry: See Figure 1.

3.4
rated capacity
<attachment> maximum load that the *attachment* (3.17) is permitted by its manufacturer to handle in normal operation under specified conditions

Note 1 to entry: The rated capacity of the *attachment* (3.17) can be associated with the load centre distance. See Table 1.

3.5
actual capacity
maximum load at a specified load centre distance, established by the manufacturer based on component strength and truck stability, that the truck can carry, lift and stack to a specified *lift height* (3.7) and *reach* (3.6), in normal operation

Note 1 to entry: See Figure 1.

Note 2 to entry: The actual capacity depends on the configuration of the truck in respect of variables including lift height, the reach of the *boom* (3.14), the actual load centre, load-handling devices and *stabilizing devices* (3.11).

Note 3 to entry: It defines the load-handling ability of the particular truck as equipped. Different actual capacity with removable *attachments* (3.17), where permitted, may also be established by the appropriate stability test or by calculation verified by empirical data.

3.6
reach
d
distance between two vertical parallel planes, one plane being tangent to the front of the outside diameter of the front tyres or tracks, the other plane being tangent to the curve described by the centre of gravity of the load moving from its highest position to its lowest position

Note 1 to entry: See Figure 1.

Note 2 to entry: In practice, the reach can be measured by referring to a point, g, corresponding to the vertical projection of the centre of gravity, G, of the load onto the plane of the top surface of the *fork arms* (3.13), as shown in Figure 1.

© ISO 2020 – All rights reserved
Documents
Document Sharing Hub
Full document details: BS ISO 10896-1:2020

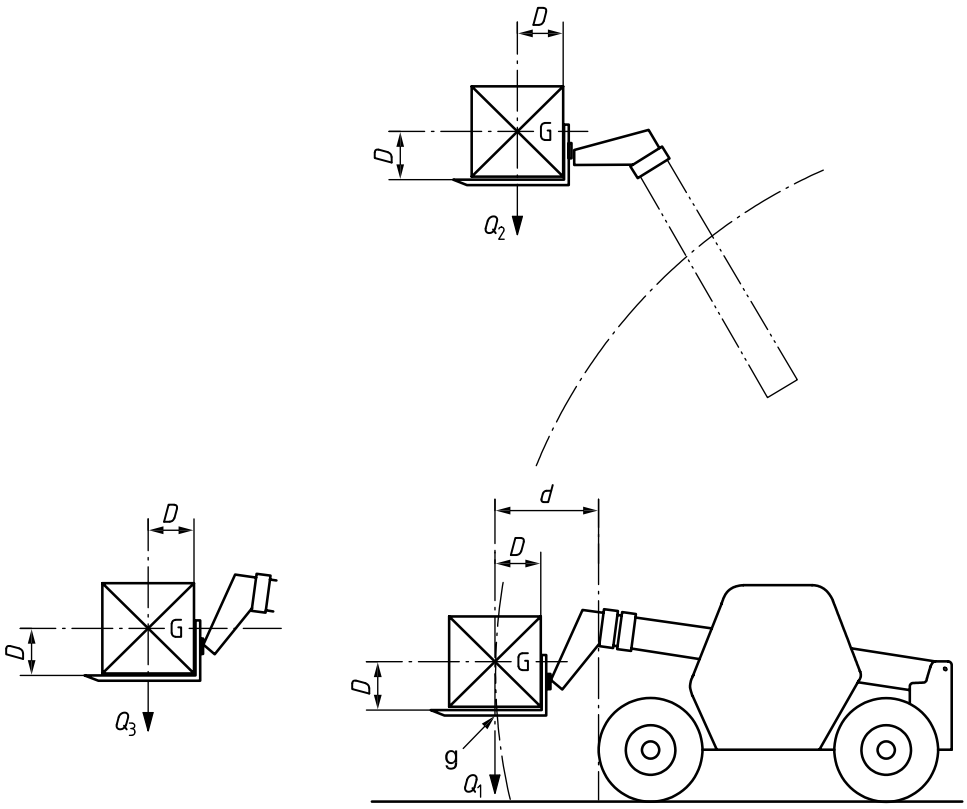

Key

d reach

D standard load centre distance

G centre of gravity of the load

g point corresponding to vertical projection of G

Q_1 rated capacity

Q_2 actual capacity at maximum lift height

Q_3 actual capacity at maximum reach

Figure 1 — Parameters for determining actual capacity of a truck with fork arms

3.7
lift height
height from the ground to the upper face of the fork arms or underside of the load, whichever is the lower

3.8
standard load centre distance
D
distance from the centre of gravity of the load, horizontally rearwards to the front of the fork shanks and vertically downwards to the upper faces of the *fork arms* (3.13)

Note 1 to entry: See Figure 1.

Note 2 to entry: Table 1 gives standard load centre distances in relation to their rated capacities.

© ISO 2020 – All rights reserved

Documents
Document Sharing Hub
Full document details: BS ISO 10896-1:2020

Table 1 — Standard load centre distances and rated capacities

Rated capacity		Standard load centre distance				
Q_1 kg		D mm				
		400	**500**	**600**	**900**	**1 200**
0	<1 000	X		X[a]		
≥1 000	<5 000		X[c]	X[b]		
≥5 000	<10 000			X		
≥10 000	<20 000			X	X	X
≥20 000	<25 000				X	X
≥25 000						X

NOTE Trucks can be rated for special applications with load centres related to those applications.

[a] 600 mm is typically used in the USA.

[b] 600 mm is typically used in Asia, Australia and the USA.

[c] 500 mm is typically used in Europe.

3.9
lost load distance
l_L
effective thickness
d_E
horizontal shift in the standard load centre that can occur when removable *attachments* (3.17) are added to a truck

3.10
axle oscillation locking-mechanism
mechanism designed to lock oscillation of an axle to improve truck stability

3.11
stabilizing device
extendable or pivoting mechanical support used to improve the stability of a truck when stationary

3.12
lateral levelling
change in the lateral inclination angle between the chassis and the ground made to ensure that the *boom* (3.14) operates in a vertical plane even when the truck is positioned on a side slope

3.13
fork arms
device comprising two or more solid fork arms, each consisting of a shank (vertical portion) and a blade, which is hook- or shaft-mounted, fitted on the carriage and usually adjusted manually

3.14
boom
pivoting support member that permits horizontal and vertical placement of the load or *attachment* (3.17)

3.15
crab steering mode
steering mode where all wheels of the truck steer in the same direction

© ISO 2020 – All rights reserved
Documents
Document Sharing Hub
Full document details: BS ISO 10896-1:2020

3.16
normal operating position
position specified by the manufacturer in which the operator is able to control the truck operations, including load-handling functions

Note 1 to entry: Other positions can be necessary if it is not possible to control all the functions of the truck from a single position.

3.17
attachment
interchangeable equipment
component or assembly of components which can be mounted on the *attachment bracket* (3.18) for a specific use

3.18
attachment bracket
device fitted at the end of the *boom* (3.14) to connect and lock interchangeable *attachment(s)* (3.17) without the use of a tool to facilitate quick interchange of *attachment(s)* (3.17)

3.19
non-slewing
slewing movement not greater than 5° to either side of the longitudinal axis of the truck

Note 1 to entry: See Figure 2.

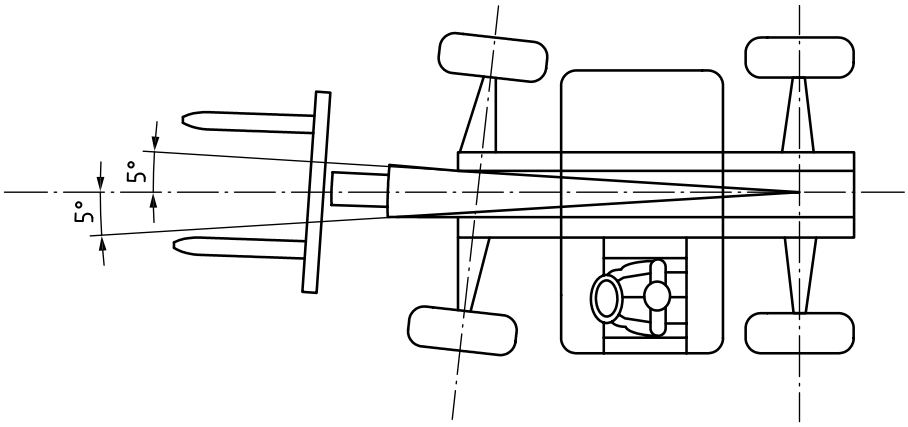

Figure 2 — Non-slewing movement

3.20
boom float
control mode that uses gravity to allow an *attachment* (3.17) at the end of the *boom* (3.14) to follow a contour (e.g. the ground)

3.21
maximum working pressure
highest pressure at which a hydraulic circuit is intended to operate in steady-state operating conditions

[SOURCE: ISO 5598:2020, 3.2.429, modified — In the definition, "system or sub-system" has been replaced by "hydraulic circuit".]

3.22
level ground
ground with a gradient of (0 ± 2) %

3.23
hybrid
truck powered using two or more distinct power sources

© ISO 2020 – All rights reserved

Documents
Document Sharing Hub
Full document details: BS ISO 10896-1:2020

3.24
rough-terrain variable-reach truck
rough-terrain truck fitted with one or more articulated arms, telescopic or not, non-slewing or having a slewing movement of not more than 5° either side of the longitudinal axis of the truck used for stacking loads

3.25
technically permissible maximum operating mass
operating mass without the forks and including the heaviest attachment approved by the truck manufacturer without load

4 Safety requirements and/or protective/risk reduction measures

4.1 General

4.1.1 General

Rough-terrain variable-reach trucks, as defined in 3.24, shall comply with the safety requirements and/or protective measures/risk reduction of this clause. In addition, the truck shall be designed according to the principles of ISO 12100 for relevant but not significant hazards, which are not dealt with by this document.

4.1.2 Sharp edges and acute angles

Sharp edges and acute angles shall meet the requirements specified in ISO 12508 in areas to which the operator can be exposed during operation, access, egress and daily maintenance.

4.1.3 Stored energy components

Components that store energy and can cause a risk of injury during removal or disassembly, e.g. hydraulic accumulators and spring-applied brakes, shall be provided with a means to release the energy before removal or disassembly and shall be visibly marked according to 6.2.8.

4.2 Starting/moving and stopping

4.2.1 Unauthorized starting

All trucks shall be provided with a device (e.g. key, key pad, magnetic card) within the zone of reach of the operator at their normal operating position as defined in ISO 6682 that prevents starting without the use of such device.

4.2.2 Stopping system

The truck shall be provided with a stopping device (e.g. a key) within the zone of reach of the operator at their normal operating position as defined in ISO 6682.

The normal stop control device shall be clearly identifiable, and clearly visible.

4.2.3 Unintended movement

Trucks shall be designed such that the engine cannot be started while the drive system is engaged.

When the drive system direction control is in neutral position, a means shall be provided to maintain it in its neutral position.

© ISO 2020 – All rights reserved
Documents
Document Sharing Hub
Full document details: BS ISO 10896-1:2020