BS ISO 10896-2:2016

BSI Standards Publication

Rough-terrain trucks — Safety requirements and verification

Part 2: Slewing trucks

bsi.

...making excellence a habit.™

Document Sharing Hub

Full document details: BS ISO 10896-2:2016

National foreword

This British Standard is the UK implementation of ISO 10896-2:2016.

The UK participation in its preparation was entrusted to Technical Committee MHE/7, Industrial trucks.

A list of organizations represented on this committee can be obtained on request to its secretary.

This publication does not purport to include all the necessary provisions of a contract. Users are responsible for its correct application.

© The British Standards Institution 2016.
Published by BSI Standards Limited 2016

ISBN 978 0 580 82706 8

ICS 53.060

Compliance with a British Standard cannot confer immunity from legal obligations.

This British Standard was published under the authority of the Standards Policy and Strategy Committee on 29 February 2016.

Amendments/corrigenda issued since publication

Date	Text affected

Documents
Document Sharing Hub

Full document details: BS ISO 10896-2:2016

INTERNATIONAL STANDARD

ISO 10896-2

First edition
2016-02-15

Rough-terrain trucks — Safety requirements and verification —

Part 2: Slewing trucks

Chariots tout-terrain — Exigences de sécurité et vérifications —

Partie 2: Chariots rotatifs

Reference number
ISO 10896-2:2016(E)

Documents
Document Sharing Hub
© ISO 2016

Full document details: BS ISO 10896-2:2016

COPYRIGHT PROTECTED DOCUMENT

© ISO 2016, Published in Switzerland

All rights reserved. Unless otherwise specified, no part of this publication may be reproduced or utilized otherwise in any form or by any means, electronic or mechanical, including photocopying, or posting on the internet or an intranet, without prior written permission. Permission can be requested from either ISO at the address below or ISO's member body in the country of the requester.

ISO copyright office
Ch. de Blandonnet 8 • CP 401
CH-1214 Vernier, Geneva, Switzerland
Tel. +41 22 749 01 11
Fax +41 22 749 09 47
copyright@iso.org
www.iso.org

© ISO 2016 – All rights reserved

Documents
Document Sharing Hub

Full document details: BS ISO 10896-2:2016

Contents

Page

Foreword ... **vi**
Introduction ... **vii**
1 Scope ... **1**
2 Normative references ... **2**
3 Terms and definitions ... **3**
4 Requirements ... **8**
4.1 General ... 8
4.1.1 Sharp edges and acute angles ... 8
4.1.2 Stored energy components ... 8
4.1.3 Boom extension and angle indicators ... 8
4.2 Starting/moving ... 8
4.2.1 Unauthorized starting ... 8
4.2.2 Unintended movement ... 9
4.2.3 Uncontrolled motion ... 9
4.2.4 Powered travel movement ... 9
4.2.5 Non-activation of the parking brake ... 9
4.2.6 Inching pedal ... 9
4.3 Brakes ... 9
4.3.1 General ... 9
4.3.2 Failure of energy supply ... 9
4.4 Electrical and electronic systems ... 10
4.4.1 General ... 10
4.4.2 Degree of protection ... 10
4.4.3 Electrical connections ... 10
4.4.4 Over-current protective devices ... 10
4.4.5 Batteries ... 10
4.4.6 Battery disconnection ... 10
4.5 Controls ... 11
4.5.1 General ... 11
4.5.2 Differential locking ... 11
4.5.3 Steering controls ... 12
4.5.4 Load-handling controls ... 13
4.5.5 Multi-function controls ... 13
4.5.6 Stabilizing device control ... 13
4.5.7 Sway/levelling control ... 14
4.5.8 Axle oscillation locking ... 14
4.5.9 Auxiliary hydraulic control ... 14
4.6 Power systems and accessories ... 14
4.6.1 Exhaust systems ... 14
4.6.2 Cooling systems ... 14
4.6.3 Tanks and pressure vessels ... 14
4.7 Stabilizing devices ... 15
4.8 Design requirements for maintenance purposes ... 15
4.8.1 General ... 15
4.8.2 Tiltable cab support device ... 16
4.9 Systems for lifting, tilting and reaching ... 16
4.9.1 Chains and wire ropes ... 16
4.9.2 Hydraulic system ... 17
4.9.3 Maximum load-lowering speed ... 17
4.9.4 Limitation of stroke ... 17
4.9.5 Fork arms, attachments, and quick couplers ... 18
4.9.6 Slewing brake ... 18
4.10 Normal operating position ... 18

AVA Documents
Document Sharing Hub

© ISO 2016 – All rights reserved

Full document details: BS ISO 10896-2:2016

4.10.1 General requirements ... 18
4.10.2 Storage of operator's manual ... 18
4.10.3 Hot parts ... 18
4.10.4 Pipes and hoses ... 18
4.10.5 Normal operating position equipped with enclosed cab ... 18
4.10.6 Operator's seat ... 20
4.10.7 Control panels and symbols on displays ... 21
4.11 Operator access ... 22
4.11.1 General requirements ... 22
4.11.2 Enclosed cab openings ... 22
4.12 Protective measures and devices ... 23
4.12.1 Hot parts ... 23
4.12.2 Protection against crushing, shearing, and trapping ... 23
4.12.3 Guards ... 23
4.12.4 Safety signs ... 23
4.12.5 Engine compartment ... 23
4.12.6 Fenders ... 23
4.12.7 Roll-over protective structures (ROPS) and falling object protective structures (FOPS) ... 23
4.12.8 Tiltable cab ... 24
4.12.9 Audible warning devices ... 24
4.13 Stability ... 24
4.14 Visibility ... 24
4.15 External lighting devices ... 24
4.16 Fire protection ... 24
4.16.1 Fire resistance ... 24
4.16.2 Fire extinguisher ... 24
4.17 Retrieval, transportation, lifting, and towing ... 24
4.17.1 General ... 24
4.17.2 Retrieval ... 24
4.17.3 Tie-down ... 25
4.17.4 Lifting ... 25
4.17.5 Towing ... 25
4.17.6 Transportation ... 25
4.18 Noise ... 25
4.19 Structural calculations ... 25
4.19.1 General ... 25
4.19.2 Loads and forces ... 25
4.19.3 Calculations ... 27

5 Verification of requirements and safety measures ... 28
5.1 General ... 28
5.2 Functional verification ... 28
5.3 Structural verification ... 28
5.3.1 Test loads ... 28
5.3.2 Static test ... 29
5.3.3 Dynamic testing ... 29
5.4 Maximum load-lowering speed verification ... 30
5.5 Load holding ... 30

6 Information for use ... 30
6.1 General ... 30
6.2 Operator's and maintenance manuals ... 30
6.3 Marking ... 32
6.4 Load charts ... 33
6.4.1 Trucks with load-carrying attachments ... 33
6.4.2 Trucks with non-load-carrying attachments ... 34

Annex A (informative) **List of significant hazards ... 35**

Documents
Document Sharing Hub

© ISO 2016 – All rights reserved

Full document details: BS ISO 10896-2:2016

Annex B (normative) **Attachments and quick couplers** **40**
Annex C (informative) **Consistency of direction of motion for load-handling controls** **43**
Annex D (informative) **Examples of regular and occasional loads** **45**
Bibliography **46**

© ISO 2016 – All rights reserved

Documents
Document Sharing Hub
Full document details: BS ISO 10896-2:2016

Foreword

ISO (the International Organization for Standardization) is a worldwide federation of national standards bodies (ISO member bodies). The work of preparing International Standards is normally carried out through ISO technical committees. Each member body interested in a subject for which a technical committee has been established has the right to be represented on that committee. International organizations, governmental and non-governmental, in liaison with ISO, also take part in the work. ISO collaborates closely with the International Electrotechnical Commission (IEC) on all matters of electrotechnical standardization.

The procedures used to develop this document and those intended for its further maintenance are described in the ISO/IEC Directives, Part 1. In particular the different approval criteria needed for the different types of ISO documents should be noted. This document was drafted in accordance with the editorial rules of the ISO/IEC Directives, Part 2 (see www.iso.org/directives).

Attention is drawn to the possibility that some of the elements of this document may be the subject of patent rights. ISO shall not be held responsible for identifying any or all such patent rights. Details of any patent rights identified during the development of the document will be in the Introduction and/or on the ISO list of patent declarations received (see www.iso.org/patents).

Any trade name used in this document is information given for the convenience of users and does not constitute an endorsement.

For an explanation on the meaning of ISO specific terms and expressions related to conformity assessment, as well as information about ISO's adherence to the WTO principles in the Technical Barriers to Trade (TBT) see the following URL: Foreword - Supplementary information

The committee responsible for this document is ISO/TC 110, *Industrial trucks*, Subcommittee SC 4, *Rough-terrain trucks*.

ISO 10896 consists of the following parts, under the general title *Rough-terrain trucks — Safety requirements and verification*:

— *Part 1: Variable-reach trucks*

— *Part 2: Slewing trucks*

— *Part 4: Additional requirements for variable-reach trucks handling freely suspended loads*

— *Part 5: Interface between rough-terrain truck and integrated personnel work platform*

— *Part 6: Tilting operator's cabs*

— *Part 7: Longitudinal load moment systems*

Safety requirements and verification of lorry-mounted trucks is addressed by ISO 20297-1.

© ISO 2016 – All rights reserved
Documents
Document Sharing Hub
Full document details: BS ISO 10896-2:2016

Introduction

Variable-reach trucks are known by a variety of terms, including “telehandlers” and “multi-purpose handlers”.

The rough-terrain variable-reach trucks covered by this part of ISO 10896 are designed to transport loads to and place them on elevated work areas and can be driven on unimproved or disturbed terrain.

They can also be equipped with a variety of attachments (e.g. mowers, sweepers).

© ISO 2016 – All rights reserved

Documents
Document Sharing Hub
Full document details: BS ISO 10896-2:2016

Documents
Document Sharing Hub

INTERNATIONAL STANDARD ISO 10896-2:2016(E)

Rough-terrain trucks — Safety requirements and verification —

Part 2: Slewing trucks

1 Scope

This part of ISO 10896 specifies general safety requirements for slewing rough-terrain variable-reach trucks (hereafter known as "trucks"), consisting of a lower chassis with a slewing upper structure equipped with a telescopic lifting means (pivoted boom), on which a load handling device (e.g., carriage and fork arms) is typically fitted. Fork arms and other integrated attachments are considered to be parts of the truck.

Other standards, in addition to the relevant provisions of this part of ISO 10896, can apply to the attachments.

This part of ISO 10896 is not applicable to the following:

a) rough terrain variable-reach trucks covered by ISO 10896-1 (non-slewing);

b) industrial variable-reach trucks covered by ISO 3691-2;

c) mobile cranes;

d) machines designed primarily for earth-moving, such as loaders, even if their buckets are replaced by fork arms (see ISO 20474);

e) trucks designed primarily with variable-length load suspension elements (e.g. chain, ropes) from which the load may swing freely in all directions;

NOTE Additional requirements for trucks intended for freely swinging load applications, their lifting devices and attachments, and personnel/work platform applications on trucks, are being developed by ISO/TC 110/SC4.

f) trucks designed primarily for container handling.

The significant hazards covered by this part of ISO 10896 are listed in Annex A. This part of ISO 10896 does not address hazards that can occur

— during manufacture,

— when handling suspended loads, which may swing freely,

— when lifting personnel,

— when using trucks on public roads,

— when operating in potentially explosive atmospheres, or

— with a battery, LPG or hybrid as the primary power source.

© ISO 2016 – All rights reserved

Documents
Document Sharing Hub
Full document details: BS ISO 10896-2:2016

2 Normative references

The following documents, in whole or in part, are normatively referenced in this document and are indispensable for its application. For dated references, only the edition cited applies. For undated references, the latest edition of the referenced document (including any amendments) applies.

ISO 2328, *Fork-lift trucks — Hook-on type fork arms and fork arm carriages — Mounting dimensions*

ISO 2330, *Fork-lift trucks — Fork arms — Technical characteristics and testing*

ISO 2867:2011, *Earth-moving machinery — Access systems*

ISO 3449, *Earth-moving machinery — Falling-object protective structures — Laboratory tests and performance requirements*

ISO 3457, *Earth-moving machinery — Guards — Definitions and requirements*

ISO 3471:2008, *Earth-moving machinery — Roll-over protective structures — Laboratory tests and performance requirements*

ISO 3795, *Road vehicles, and tractors and machinery for agriculture and forestry — Determination of burning behaviour of interior materials*

ISO 4413, *Hydraulic fluid power — General rules and safety requirements for systems and their components*

ISO 5053-1, *Powered industrial trucks — Terminology and classification — Part 1: Types of industrial trucks*

ISO 5353, *Earth-moving machinery, and tractors and machinery for agriculture and forestry — Seat index point*

ISO 6292, *Powered industrial trucks and tractors — Brake performance and component strength*

ISO 6682, *Earth-moving machinery — Zones of comfort and reach for controls*

ISO 6683, *Earth-moving machinery — Seat belts and seat belt anchorages — Performance requirements and tests*

ISO 7000[1)], *Graphical symbols for use on equipment — Registered symbols*

ISO 7096, *Earth-moving machinery — Laboratory evaluation of operator seat vibration*

ISO 9244, *Earth-moving machinery — Machinery safety labels — General principles*

ISO 9533, *Earth-moving machinery — Machine-mounted audible travel alarms and forward horns — Test methods and performance criteria*

ISO 10263-3, *Earth-moving machinery — Operator enclosure environment — Part 3: Pressurization test method*

ISO 10263-4, *Earth-moving machinery — Operator enclosure environment — Part 4: Heating, ventilating and air conditioning (HVAC) test method and performance*

ISO 11112, *Earth-moving machinery — Operator's seat — Dimensions and requirements*

ISO 12508, *Earth-moving machinery — Operator station and maintenance areas — Bluntness of edges*

ISO 13284, *Fork-lift trucks — Fork-arm extensions and telescopic fork arms — Technical characteristics and strength requirements*

ISO 13732-1, *Ergonomics of the thermal environment — Methods for the assessment of human responses to contact with surfaces — Part 1: Hot surfaces*

---

1) The database on Graphical Symbols for Use on Equipment contains the complete set of graphical symbols included in IEC 60417 and ISO 7000: http://www.graphical-symbols.info/.

© ISO 2016 – All rights reserved
Documents
Document Sharing Hub
Full document details: BS ISO 10896-2:2016

ISO 13849-1, *Safety of machinery — Safety-related parts of control systems — Part 1: General principles for design*

ISO 13850, *Safety of machinery — Emergency stop — Principles for design*

ISO 13857, *Safety of machinery — Safety distances to prevent hazard zones being reached by upper and lower limbs*

ISO 15817, *Earth-moving machinery — Safety requirements for remote operator control*

ISO 15870, *Powered industrial trucks — Safety signs and hazard pictorials — General principles*

ISO 16528-1, *Boilers and pressure vessels — Part 1: Performance requirements*

ISO 16528-2, *Boilers and pressure vessels — Part 2: Procedures for fulfilling the requirements of ISO 16528-1*

ISO 21507, *Earth-moving machinery — Performance requirements for non-metallic fuel tanks*

ISO 22915-10, *Industrial trucks — Verification of stability — Part 10: Additional stability test for trucks operating in the special condition of stacking with load laterally displaced by powered devices*

ISO 22915-20, *Industrial trucks — Verification of stability — Part 20: Additional stability test for trucks operating in the special condition of offset load, offset by utilization*

ISO 22915-24, *Industrial trucks — Verification of stability — Part 24: Slewing variable-reach rough-terrain trucks*

IEC 60529, *Degrees of protection provided by enclosures (IP Code)*

3 Terms and definitions

For the purposes of this document, the terms and definitions given in ISO 5053-1 and the following apply.

3.1
rough-terrain variable-reach truck
variable-reach truck intended primarily for operation on unimproved natural terrain and on the disturbed terrain of, for example, construction sites

[SOURCE: ISO 5053-1:2015, 3.21]

3.2
slewing rough-terrain variable-reach truck
rough-terrain variable-reach truck (3.1) with an upper structure which can rotate around a vertical axis of the chassis in a circular motion greater than 5° either side of the longitudinal axis of the truck

[SOURCE: ISO 5053-1:2015, 3.22]

3.3
actual capacity
maximum load, established by the manufacturer based on component strength and truck stability, that the truck can carry, lift, and stack to a specified height, at a specified load centre distance and reach, in normal operating conditions

Note 1 to entry: The actual capacity depends on the configuration of the truck in terms of such variables as the following:

— lift height;

— reach of the boom (measured from the centre of slewing of the rotating upper structure);

— slewing position;

— actual load centre;

© ISO 2016 – All rights reserved

Documents
Document Sharing Hub
Full document details: BS ISO 10896-2:2016

— load handling device (fork arms or attachment fitted);

— stabilizing devices.

Note 2 to entry: This actual capacity defines the load handling ability of the particular truck as equipped. Additional actual capacity ratings with removable attachments may also be established where permitted by the appropriate stability test or by calculation verified by empirical data.

3.4
reach
d
normal distance between the axis of rotation of the upper structure and the vertical plane including *G* perpendicular to the longitudinal axis of the upper structure

Note 1 to entry: See Figure 1.

Note 2 to entry: The centre-of-gravity of the load (*G*) is defined in Table 1.

3.5
rated capacity
Q_1
<truck> maximum load permitted by the manufacturer at the standard load centre distance that the truck is capable of lifting and transporting on *fork arms* (3.13) in normal conditions with the boom fully retracted

Note 1 to entry: See Figure 1.

3.6
rated capacity
<attachment> maximum load that the attachment is permitted by its manufacturer to handle in normal operation under specified conditions

Note 1 to entry: The rated capacity of the attachment can be associated with the load centre distance. See Table 1.

3.7
lift height
H
height from the ground to the upper face of the fork arms or underside of the load, whichever is the lower

3.8
standard load centre distance
D
distance from the centre of gravity of the load, horizontally rearwards to the front of the fork shanks and vertically downwards to the upper faces of the *fork arms* (3.13)

Note 1 to entry: See Figure 1.

Note 2 to entry: Table 1 gives standard load centre distances in relation to their rated capacities.

3.9
effective thickness
ET
horizontal shift in the standard load centre that may occur when removable attachments are added to a truck

Note 1 to entry: Effective thickness is also known as lost load (LL) or lost load centre (LLC).

© ISO 2016 – All rights reserved
Documents
Document Sharing Hub
Full document details: BS ISO 10896-2:2016

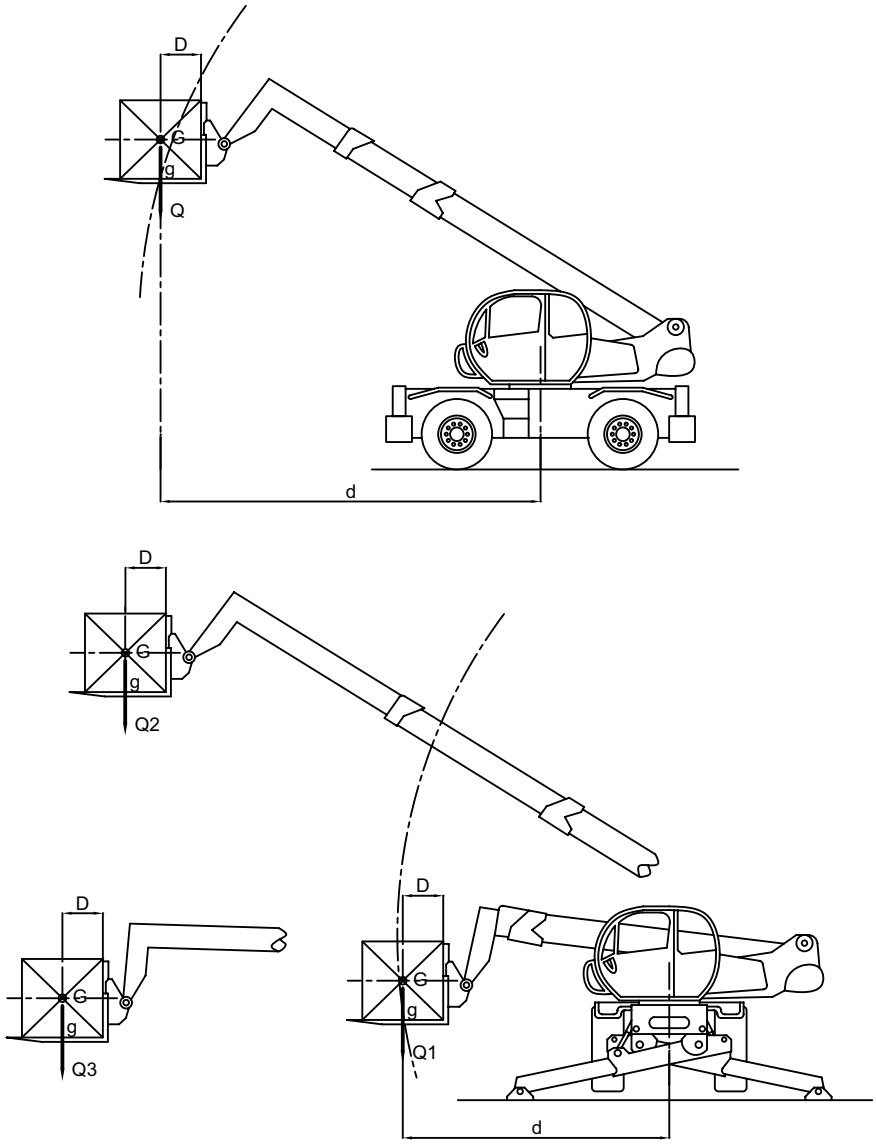

Key

d reach

D standard load centre distance

G centre of gravity of the load

g vertical projection of the centre-of-gravity (*G*) of the load onto the plane of the top surface of the fork arms

Q_1 rated capacity

Q_2 actual capacity at maximum height

Q_3 actual capacity at maximum reach

Figure 1 — Parameters for the designation of the actual capacity of the truck with fork arms

© ISO 2016 – All rights reserved

Documents
Document Sharing Hub
Full document details: BS ISO 10896-2:2016

Table 1 — Standard load centre distances and rated capacities

Rated capacity Q_1 kg		Standard load centre distance D mm				
		400	**500**	**600**	**900**	**1 200**
0	<1 000	X		X[a]		
≥1 000	<5 000		X[c]	X[b]		
≥5 000	<10 000			X		
≥10 000	<20 000			X	X	X
≥20 000	<25 000				X	X
≥25 000						X

NOTE Trucks may be rated for special applications with load centres related to those applications.

[a] 600 mm is used in the USA.

[b] 600 mm is used in Asia, Australia, and the USA.

[c] 500 mm is typically used in Europe.

3.10
axle oscillation locking-mechanism
mechanism designed to lock oscillation of an axle to improve truck stability

3.11
stabilizing devices
extendable and/or pivoting mechanical supports used to improve the stability of a truck when stationary

3.12
adjustable levelling
setting the plane inclination angle between the chassis and the ground to ensure the boom operates in a vertical plane when the truck is positioned on a slope

3.13
fork arms
device comprising two or more solid fork arms, each consisting of a shank (vertical portion) and blade, which is hook- or shaft-mounted, fitted on the carriage

3.14
boom
pivoting support member that permits horizontal and vertical placement of the load or attachment

3.15
crab steering mode
steering mode where all wheels of the truck steer in the same direction

3.16
normal operating position
position specified by the manufacturer in which the operator is able to control the truck operations, including load-handling functions

Note 1 to entry: Other positions may be necessary if it is not possible to control all the functions of the truck from a single position.

3.17
attachment
component or assembly of components which can be mounted on the *quick coupler* (3.18) for a specific use

© ISO 2016 – All rights reserved
Documents
Document Sharing Hub
Full document details: BS ISO 10896-2:2016

3.18
quick coupler
device fitted at the end of the boom to connect and lock interchangeable *attachments* (3.17) without the use of a tool to facilitate quick interchange of attachments

3.19
forward aligned position
configuration of the truck in which the longitudinal mid-axis of the slewing upper structure is aligned with the longitudinal mid-axis of the chassis and where the telescopic boom is oriented toward the front of the truck as defined by the manufacturer

Note 1 to entry: See Figure 2.

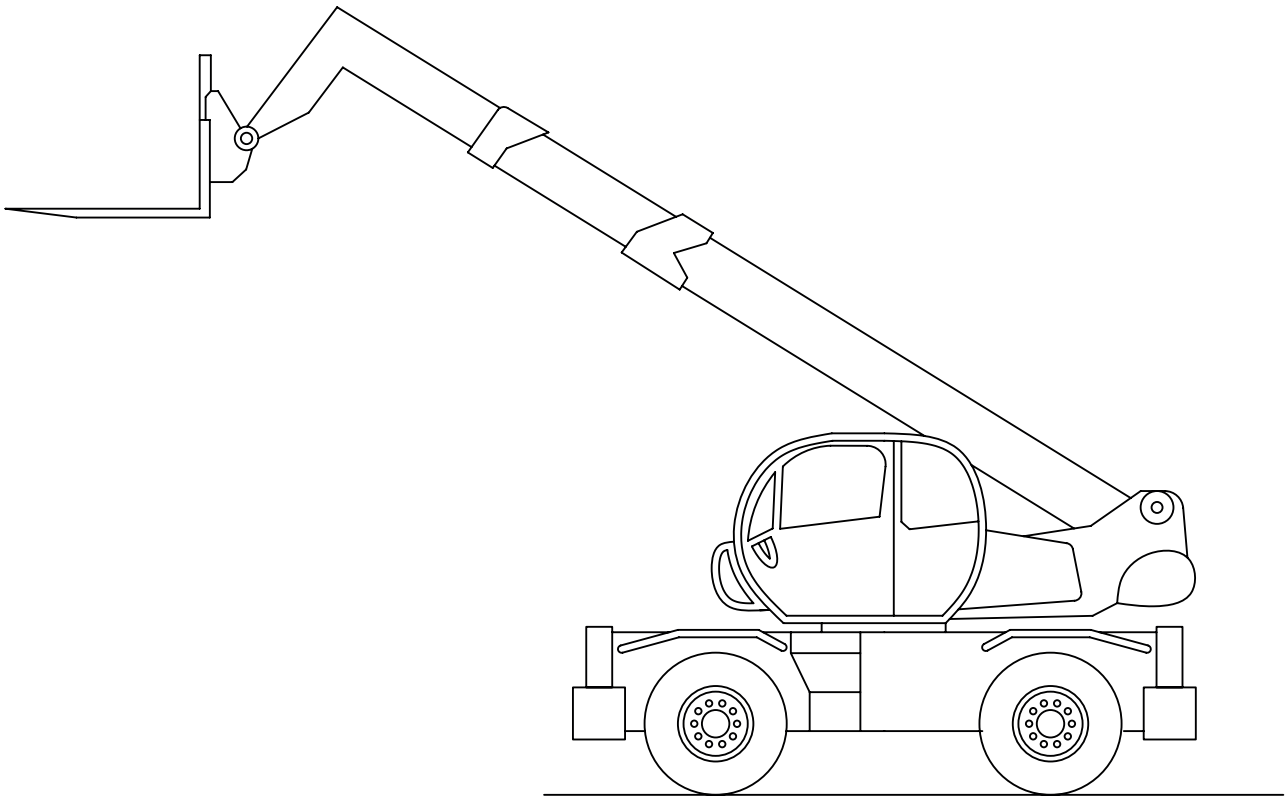

Figure 2 — Forward aligned position

3.20
rearward aligned position
configuration of the truck in which the longitudinal mid-axis of the slewing upper structure is aligned with the longitudinal mid-axis of the chassis and where the telescopic boom is oriented toward the back of the machine as defined by the manufacturer

3.21
forward position
configuration of the truck in which the longitudinal mid-axis of the slewing upper structure is rotated at an angle between −90° and +90° to the forward aligned position

3.22
load indicating device
LID
device that warns the operator when the truck load moment limits, pre-determined by the manufacturer, are approached/reached as a consequence of a change to the load handling geometry, and/or warns when overloading

© ISO 2016 – All rights reserved

Documents
Document Sharing Hub
Full document details: BS ISO 10896-2:2016

3.23
load limiting device
LLD
device that prevents the operator changing the load handling geometry in direction(s) which would increase the load moment beyond the limits permitted by the manufacturer, and/or prevents overloading

3.24
load handling geometry
relationship of points, lines, and angles, described by the position of the load centre of gravity (the position of the boom, carriage and attachment, and slewing angle where applicable) and tipping line (on wheels or stabilizers)

3.25
boom float
control mode that uses gravity to allow an *attachment* (3.17) at the end of the boom to follow a contour (e.g. the ground)

3.26
maximum working pressure
highest pressure at which a hydraulic circuit is intended to operate under normal operating conditions

3.27
level ground
ground with a gradient of (0 ± 2) %

3.28
hybrid
truck powered using two or more distinct power sources

4 Requirements

4.1 General

4.1.1 Sharp edges and acute angles

Sharp edges and acute angles shall meet the requirements specified in ISO 12508 in areas to which the operator can be exposed during operation, access, egress, and daily maintenance.

4.1.2 Stored energy components

Components that store energy and can cause a risk of injury during removal or disassembly, e.g. hydraulic accumulators and spring-applied brakes, shall be provided with a means to release the energy before removal or disassembly and shall be clearly marked.

4.1.3 Boom extension and angle indicators

Visual indication shall be given to the operator on actual boom angle and extension.

4.2 Starting/moving

4.2.1 Unauthorized starting

All trucks shall be provided with a device (e.g. key, key pad, magnetic card) that prevents starting without the use of such device.

© ISO 2016 – All rights reserved
Documents
Document Sharing Hub
Full document details: BS ISO 10896-2:2016