BS ISO 11040-4:2024

BSI Standards Publication

Prefilled syringes

Part 4: Glass barrels for injectables and sterilized subassembled syringes ready for filling

Documents
Document Sharing Hub

Full document details: BS ISO 11040-4:2024

National foreword

This British Standard is the UK implementation of ISO 11040-4:2024. It supersedes BS ISO 11040-4:2015+A1:2020, which is withdrawn.

The UK participation in its preparation was entrusted to Technical Committee CH/212, IVDs.

A list of organizations represented on this committee can be obtained on request to its committee manager.

Contractual and legal considerations

This publication has been prepared in good faith, however no representation, warranty, assurance or undertaking (express or implied) is or will be made, and no responsibility or liability is or will be accepted by BSI in relation to the adequacy, accuracy, completeness or reasonableness of this publication. All and any such responsibility and liability is expressly disclaimed to the full extent permitted by the law.

This publication is provided as is, and is to be used at the recipient's own risk.

The recipient is advised to consider seeking professional guidance with respect to its use of this publication.

This publication is not intended to constitute a contract. Users are responsible for its correct application.

© The British Standards Institution 2024
Published by BSI Standards Limited 2024

ISBN 978 0 539 16328 5

ICS 11.040.25

Compliance with a British Standard cannot confer immunity from legal obligations.

This British Standard was published under the authority of the Standards Policy and Strategy Committee on 30 June 2024.

Amendments/corrigenda issued since publication

Date	Text affected

Documents
Document Sharing Hub

Full document details: BS ISO 11040-4:2024

International Standard

ISO 11040-4

Fourth edition
2024-06

Prefilled syringes —

Part 4:
Glass barrels for injectables and sterilized subassembled syringes ready for filling

Seringues préremplies —

Partie 4: Cylindres en verre pour produits injectables et seringues pré-assemblées stérilisées préremplissables

Reference number
ISO 11040-4:2024(en)

© ISO 2024

Documents
Document Sharing Hub

Full document details: BS ISO 11040-4:2024

COPYRIGHT PROTECTED DOCUMENT

© ISO 2024

All rights reserved. Unless otherwise specified, or required in the context of its implementation, no part of this publication may be reproduced or utilized otherwise in any form or by any means, electronic or mechanical, including photocopying, or posting on the internet or an intranet, without prior written permission. Permission can be requested from either ISO at the address below or ISO's member body in the country of the requester.

ISO copyright office
CP 401 • Ch. de Blandonnet 8
CH-1214 Vernier, Geneva
Phone: +41 22 749 01 11
Email: copyright@iso.org
Website: www.iso.org

Published in Switzerland

Documents
Document Sharing Hub
Full document details: BS ISO 11040-4:2024

Contents

Page

Foreword ... **v**
Introduction ... **vii**
1 Scope ... **1**
2 Normative references ... **1**
3 Terms and definitions ... **2**
4 General requirements ... **4**
4.1 Quality systems ... 4
4.2 Testing ... 4
4.3 Documentation ... 4
5 Syringe barrel ... **4**
5.1 Design including dimensions ... 4
5.1.1 Dimensions for 6 % Luer slip and 6 % Luer slip for Luer lock adapter front end syringes ... 4
5.1.2 Specific dimensions for front end design for 6 % Luer slip and 6 % Luer slip for Luer lock adapter ... 6
5.1.3 Dimensions for staked needle (SN) syringes ... 7
5.1.4 Front end design for staked needle syringe ... 9
5.2 Functional testing of Luer connection ... 10
5.3 Material ... 10
5.4 Performance requirements ... 10
5.4.1 Hydrolytic resistance glass barrel ... 10
5.4.2 Annealing quality ... 10
5.4.3 Lubrication of the inner surface ... 10
5.4.4 Flange breakage resistance ... 10
5.4.5 Front end breakage resistance ... 11
6 Sterilized subassembled syringes ready for filling ... **11**
6.1 General ... 11
6.1.1 Design ... 11
6.1.2 Raw materials properties ... 11
6.1.3 Documentation ... 11
6.2 Sterility ... 11
6.3 Pyrogenicity/endotoxins ... 12
6.4 Particulate matter ... 12
6.5 Additional requirements to specific components of sterilized subassembled syringes ready for filling ... 12
6.5.1 Syringe barrel ... 12
6.5.2 Needle ... 13
6.5.3 Syringe closure system ... 14
6.6 Syringe closure system tightness ... 15
7 Packaging ... **15**
8 Labelling ... **16**
Annex A (informative) **Examples of types of sterilized subassembled syringes ready for filling** ... **17**
Annex B (informative) **Additional components for a subassembled syringe ready for filling** ... **19**
Annex C (normative) **Test methods for syringe barrels** ... **20**
Annex D (informative) **Sample preparation for endotoxin and particulate determination** ... **26**
Annex E (informative) **Glide force test method** ... **29**
Annex F (informative) **Needle penetration test** ... **32**
Annex G (normative) **Test methods for front end components** ... **35**

© ISO 2024 – All rights reserved

Documents
Document Sharing Hub
Full document details: BS ISO 11040-4:2024

Annex H (informative) **Tightness test** **50**
Bibliography **52**

© ISO 2024 – All rights reserved

Documents
Document Sharing Hub
Full document details: BS ISO 11040-4:2024

Foreword

ISO (the International Organization for Standardization) is a worldwide federation of national standards bodies (ISO member bodies). The work of preparing International Standards is normally carried out through ISO technical committees. Each member body interested in a subject for which a technical committee has been established has the right to be represented on that committee. International organizations, governmental and non-governmental, in liaison with ISO, also take part in the work. ISO collaborates closely with the International Electrotechnical Commission (IEC) on all matters of electrotechnical standardization.

The procedures used to develop this document and those intended for its further maintenance are described in the ISO/IEC Directives, Part 1. In particular, the different approval criteria needed for the different types of ISO document should be noted. This document was drafted in accordance with the editorial rules of the ISO/IEC Directives, Part 2 (see www.iso.org/directives).

ISO draws attention to the possibility that the implementation of this document may involve the use of (a) patent(s). ISO takes no position concerning the evidence, validity or applicability of any claimed patent rights in respect thereof. As of the date of publication of this document, ISO had not received notice of (a) patent(s) which may be required to implement this document. However, implementers are cautioned that this may not represent the latest information, which may be obtained from the patent database available at www.iso.org/patents. ISO shall not be held responsible for identifying any or all such patent rights.

Any trade name used in this document is information given for the convenience of users and does not constitute an endorsement.

For an explanation of the voluntary nature of standards, the meaning of ISO specific terms and expressions related to conformity assessment, as well as information about ISO's adherence to the World Trade Organization (WTO) principles in the Technical Barriers to Trade (TBT), see www.iso.org/iso/foreword.html.

This document was prepared by Technical Committee ISO/TC 76, *Transfusion, infusion and injection, and blood processing equipment for medical and pharmaceutical use*.

This fourth edition cancels and replaces the third edition (ISO 11040-4:2015), which has been technically revised.

The main changes are as follows:

— Clause 3 has been updated;

— update on general requirements have been added on quality systems, testing and documentation;

— additional requirements to specific components of sterilized subassembled syringes ready for filling have been revised;

— requirements on syringes barrels have been revised by:

  — addition of specification for finger flange breakage resistance,

  — addition of specification for cone breakage resistance,

  — addition of requirements specifically for staked needle syringes,

  — addition of performance requirements for non-lubricated syringes.

— figures in Annex A have been updated;

— information of former Annex B has been implemented in 5.1; new Annex B shows information of typical components of a finished prefilled syringe;

— general update of annexes.

A list of all parts in the ISO 11040 series can be found on the ISO website.

© ISO 2024 – All rights reserved

Documents
Document Sharing Hub
Full document details: BS ISO 11040-4:2024

Any feedback or questions on this document should be directed to the user's national standards body. A complete listing of these bodies can be found at www.iso.org/members.html.

© ISO 2024 – All rights reserved

Documents
Document Sharing Hub
Full document details: BS ISO 11040-4:2024

Introduction

In the past, ampoules and injection vials were mainly used for (parenteral) injectable products. However, for the injection of the products contained in those ampoules and vials, a hypodermic syringe combined with the appropriate injection needle is also needed. This means the injectable product must be transferred by the user into the hypodermic syringe before its final use. This procedure is not only time-consuming, but also presents a great number of possibilities for contamination.

To ensure safe use of an injectable product, prefilled syringes for single use are on the market for many years. Without a doubt, such prefilled syringes permit immediate injection of the product contained after relatively simple handling. These syringes can also be used in injectors with automated functions where further and particular requirements apply.

Based on the diameter of the prefilled syringes, appropriate components, such as plunger stoppers, tip caps, needle shields, and other syringe closure systems can also be standardized. In conjunction with the right sealing components, they offer a system for (parenteral) injectable use. The producers of filling machines can use this document to standardize the equipment of the machines.

In the beginning of prefilled syringe processing by the pharmaceutical industry, syringes made of tubing glass were delivered to the pharmaceutical companies in the form of so called non-sterile “bulkware” only. The process steps washing, drying, inner surface lubrication, sealing the syringe with a syringe closure system, sterilization, as well as filling and closing, were then performed in the pharmaceutical companies. Processing of “bulkware” is still performed this way. Sterilized subassembled syringes have partially replaced non-sterile “bulkware”.

In the case of sterilized subassembled syringes ready for filling, responsibility for the aforementioned process steps relevant to the injectable product lies with the manufacturer of the primary packaging material. Following the assembly of the needle shield on syringes with a staked needle or tip caps for the Luer slip version, the subassembled syringes are placed into so called nests. The nests, in turn, are placed into a plastic tub. The syringes in the nest are protected against contamination by means of an insert liner and the tub itself is sealed by a sealing lid (which is currently and, so far, primarily achieved using a gas permeable material). Thus, the tub properly sealed with the sealing lid represents the “sterile barrier system”. The sealed tub is then wrapped into a sealable bag and, thus, ready for sterilization, which is currently and, so far, primarily performed using ethylene oxide.

In this form, the sterilized subassembled syringes ready for filling are delivered to the pharmaceutical companies in a sterile condition, where they are processed on suitable machines.

© ISO 2024 – All rights reserved

Documents
Document Sharing Hub
Full document details: BS ISO 11040-4:2024

Documents
Document Sharing Hub

Prefilled syringes —

Part 4:
Glass barrels for injectables and sterilized subassembled syringes ready for filling

1 Scope

This document specifies materials, dimensions, quality, and performance requirements, as well as relevant test methods.

This document also specifies components that are part of the sterilized subassembled syringe ready for filling.

This document is applicable to

— tubing-glass barrels (single-chamber design) for injection preparations, and

— sterilized subassembled syringes ready for filling.

Glass barrels and sterilized subassembled syringes ready for filling in accordance with this document are intended for single use only.

Components to complete the subassembled syringe, such as plunger stopper and plunger rod, are outside the scope of this document.

NOTE National or regional regulations such as Ph.Eur., USP, or JP can apply.

2 Normative references

The following documents are referred to in the text in such a way that some or all of their content constitutes requirements of this document. For dated references, only the edition cited applies. For undated references, the latest edition of the referenced document (including any amendments) applies.

ISO 720, *Glass — Hydrolytic resistance of glass grains at 121 °C — Method of test and classification*

ISO 4802-1, *Glassware — Hydrolytic resistance of the interior surfaces of glass containers — Part 1: Determination by titration method and classification*

ISO 4802-2, *Glassware — Hydrolytic resistance of the interior surfaces of glass containers — Part 2: Determination by flame spectrometry and classification*

ISO 7864:2016, *Sterile hypodermic needles for single use*

ISO 8871-1, *Elastomeric parts for parenterals and for devices for pharmaceutical use — Part 1: Extractables in aqueous autoclavates*

ISO 9626, *Stainless steel needle tubing for the manufacture of medical*

ISO 10993-1, *Biological evaluation of medical devices — Part 1: Evaluation and testing within a risk management process*

ISO 10993-7, *Biological evaluation of medical devices — Part 7: Ethylene oxide sterilization residuals*

© ISO 2024 – All rights reserved

Documents
Document Sharing Hub
Full document details: BS ISO 11040-4:2024

ISO 11040-5, *Prefilled syringes — Part 5: Plunger stoppers for injectables*

ISO 80369-1, *Small-bore connectors for liquids and gases in healthcare applications — Part 1: General requirements*

ISO 80369-7, *Small-bore connectors for liquids and gases in healthcare applications — Part 7: Connectors for intravascular or hypodermic applications*

ISO 80369-20, *Small-bore connectors for liquids and gases in healthcare applications — Part 20: Common test methods*

3 Terms and definitions

For the purposes of this document, the following terms and definitions apply.

ISO and IEC maintain terminology databases for use in standardization at the following addresses:

— ISO Online browsing platform: available at https://www.iso.org/obp

— IEC Electropedia: available at https://www.electropedia.org/

3.1
customer
business entity which purchases syringe barrels or sterilized subassembled syringes ready for filling and conducts further processing or filling as appropriate

3.2
Luer connector
small-bore connector that contains a conical mating surface with a 6 % (Luer) taper intended for use in intravascular or hypodermic applications of medical devices and related accessories

Note 1 to entry: A Luer connector can be either a Luer slip connector or a Luer lock connector.

Note 2 to entry: Male Luer connectors are referenced as cone and female Luer connectors are referenced as socket to align as recommended in ISO 80369-7.

EXAMPLE Hypodermic needle systems (ISO 7864).

[SOURCE: ISO 80369-7:2021, 3.2, modified — Note 2 to entry was deleted, a new Note 2 to entry and an example were added]

3.3
Luer lock adapter
Luer connector that contains a locking mechanism which is connected to a 6 % Luer slip

Note 1 to entry: See Figure 2.

3.4
manufacturer
business entity which performs or is otherwise responsible for the manufacturing of the syringe barrels (bulkware) or for the sterilized subassembled syringes ready for filling by the customer

3.5
needle shield
elastomeric syringe closure system, which seals the front end of staked needle syringe, designed to protect the needle tip/bevel from damage and allows sterilization of the syringe

3.5.1
rigid needle shield
needle shield (3.5) covered by a rigid housing

© ISO 2024 – All rights reserved

Documents
Document Sharing Hub
Full document details: BS ISO 11040-4:2024

3.6
plunger stopper
elastomeric syringe closure, which seals the back end of the syringe

3.7
prefilled syringe
container system filled with the injectable product ready for injection

Note 1 to entry: Components of subassembled syringes ready for filling are illustrated in Annex A.

Note 2 to entry: Additional components for a subassembled syringe ready for filling are illustrated in Annex B.

3.8
sterilized subassembled syringe ready for filling
syringe that has been manufactured and sterilized

Note 1 to entry: The subassembly has been manufactured by applying the following processes, as applicable:

— glass barrel forming;

— (needle bonding for staked needle syringes);

— washing/drying;

— lubricant of inner surface of the syringe barrel (where applicable);

— (lubrication of needle for staked needle syringes);

— closure setting on front end;

— packing (see ISO 11040-7);

— sterilization.

Note 2 to entry: Examples of sterilized subassembled syringes ready for filling including components are illustrated in Annex A.

3.9
syringe barrel
cylindrical glass body with front end and finger flange as back end

Note 1 to entry: See Figure 1.

3.10
syringe closure system
elastomeric component or multi-component system designed to close the syringe system at the front end that is designed to allow sterilization of the subassembly

EXAMPLE *Tip cap* (3.11), *needle shield* (3.5), tamper-evident syringe closure system.

3.11
tip cap
elastomeric syringe closure system used with 6 % Luer slip front end

3.11.1
rigid tip cap
elastomeric *syringe closure system* (3.10) covered by a rigid housing which only works in combination with a 6 % Luer slip with a Luer lock mechanism for a Luer lock adapter

© ISO 2024 – All rights reserved

Documents
Document Sharing Hub
Full document details: BS ISO 11040-4:2024

4 General requirements

4.1 Quality systems

The documentation and activities described within this document shall follow a formal quality management system.

NOTE ISO 15378 contains requirements for a suitable quality management system for primary packaging materials for medicinal products.

4.2 Testing

Test equipment shall be qualified and implemented test methods shall be validated. The sampling plans used for the selection and testing of sterilized subassembled syringes ready for filling or components thereof shall be based upon a statistically valid rationale.

Unless agreed otherwise, testing shall be performed at ambient laboratory conditions.

NOTE Examples of suitable sampling plans are given in ISO 2859-1 and the ISO 3951 series; see also Reference [14].

4.3 Documentation

Demonstration of conformity with the requirements of this document shall be documented.

All documentation shall be retained as defined in the used quality management system (e.g. ISO 15378:2017, 7.5.3[10]). The retention period shall consider factors such as regulatory requirements, expiration date and traceability.

Documentation of conformity with the requirements can include, but is not limited to, performance data, specifications, and test results from validated test methods.

Electronic records, electronic signatures, and handwritten signatures executed to electronic records that contribute to validation, process control, or other quality decision-making processes shall be documented (for example, as defined in ISO 15378:2017, 8.5[10]).

5 Syringe barrel

5.1 Design including dimensions

5.1.1 Dimensions for 6 % Luer slip and 6 % Luer slip for Luer lock adapter front end syringes

The dimensions of the syringe barrel shall be as shown in Figure 1 and as given in Table 1, except for the total barrel length and the wall thickness, which are given for information only.

The type of front end shall be agreed upon between the manufacturer and the customer. For the 6 % Luer slip and the 6 % Luer slip for Luer lock adapter, ISO 80369-7 and ISO 80369-1 shall apply, and the dimension of the Luer conical fitting shall conform with Figure 2 or Figure 3.

NOTE Available syringe barrels are routinely made with Luer or Luer lock connection in order to enable connection to administration devices to effectively administer the drug product stored within the syringe. Examples are disposable needles, needleless connector devices, and other forms of Luer access. The current state of the art glass syringe front end forming technology cannot conform completely to the standards on Luer connectors (see ISO 80369-7).

The dimensional tolerances in Figure 2 and Figure 3 (Luer slip diameter) differ from ISO 80369-7 because of the manufacturing methodologies and the need for expanded tolerances in the glass forming manufacturing process exist. While these tolerances are outside of the range of ISO 80369-7 with respect to some of the dimensions, the formed glass tip does successfully mate with injection moulded socket counterparts. See

© ISO 2024 – All rights reserved

Documents
Document Sharing Hub
Full document details: BS ISO 11040-4:2024

5.2, ISO 80369-7 and ISO 80368-20 for functional test methods that accommodate for the formed Luer slip manufacturing process.

Luer slip dimensions mentioned in Figures 2 and 3, can be checked by means of camera measurements or indirectly by using a gauge similar to the one described in ISO 80369-7.

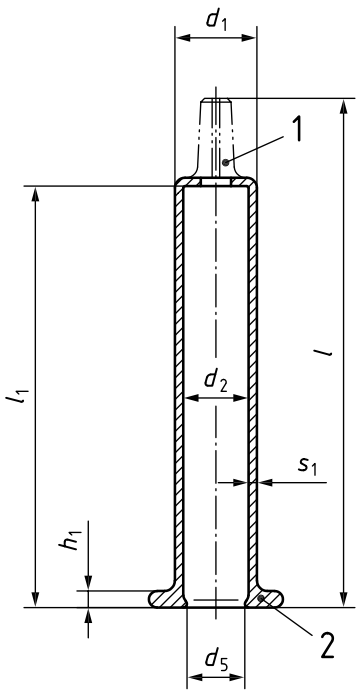

a) Syringe barrel

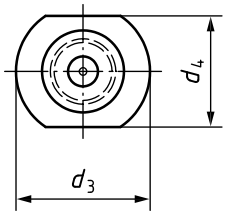

b) Cut flange

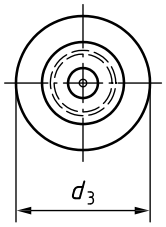

c) Large round flange

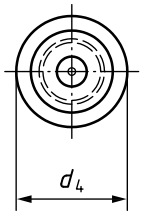

d) Small round flange

Key

1 front end

2 back end

The dimensions are given in Table 1.

NOTE 1 The bore diameter of the tip is subject to agreement between the manufacturer and the customer.

NOTE 2 The design of the finger flange is subject to agreement between the manufacturer and the customer.

Figure 1 — Example syringe barrel including types of finger flanges

© ISO 2024 – All rights reserved

Documents
Document Sharing Hub
Full document details: BS ISO 11040-4:2024

Table 1 — Syringe barrel dimensions (see Figure 1)

Dimensions in millimetres

Nomi-nal volume ml	Glass barrel										Finger flange					
	d_1		d_2		d_5	l_1		l [c]		s_1 [c]	h_1		d_3		d_4	
	nom	tol	nom	tol	min.	nom.	tol.	nom.	tol.	≈	nom.	tol.	nom.	tol.	nom.	tol.
0,5	6,85		4,65	±0,1	4,40	47,6		57,5		1,1	1,8	±0,5	13,4	±0,4	10,5	±0,4
1[a]	8,15		6,35		6,05	54		64,0	±0,5	0,9	1,9		13,8		11	
1[b]	10,85	±0,1	8,65		8,25	35,7	±0,5	46,7		1,1	2,2		17,75		14,7	
1,5	10,85		8,65		8,25	43,2		55,4		1,1	2,2		17,75	±0,75	14,7	
2	10,85		8,65		8,25	49		60,0		1,1	2,2	±0,5	17,75		14,7	±0,5
2,25	10,85		8,65	0,2	8,25	54,4		66,6	±0,75	1,1	2,2		17,75		14,7	
3	10,85		8,65		8,25	72,2		84,4	±1,0	1,1	2,2		17,75		14,7	
5	14,45		11,85		11,45	66,7	±0,75	80,0	±0,75	1,3	2,4		23		19,5	
10	17,05	±0,2	14,25		13,85	87,25		100,5	±1,0	1,4	2,5	±0,6	27	±1	21,5	
20	22,05		19,05		18,40	96,8		114,9	±1,0	1,5	3,1		32,25		25,9	±0,6

[a] Long version.

[b] Short version.

[c] Dimensions are for information only.

5.1.2 Specific dimensions for front end design for 6 % Luer slip and 6 % Luer slip for Luer lock adapter

Figure 2 and Figure 3 show detailed dimensions of the corresponding front end with 6 % Luer slip and 6 % Luer slip for Luer lock adapter.

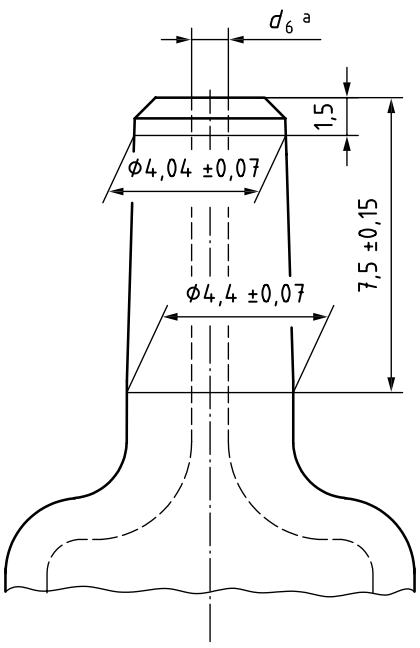

[a] Through bore diameter shall be agreed between the manufacturer and customer.

Figure 2 — Front end design with 6 % Luer slip

© ISO 2024 – All rights reserved

Documents
Document Sharing Hub
Full document details: BS ISO 11040-4:2024

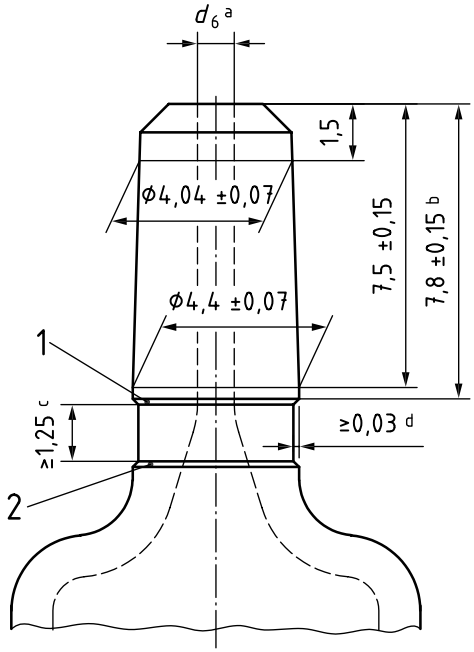

Key

1 upper chamfer

2 lower chamfer

a Through bore diameter shall be agreed between the manufacturer and customer.

b Length of 6 % Luer slip for Luer lock adapter.

c Length of groove for Luer lock adapter.

d Depth of groove for Luer lock adapter.

NOTE The lower chamfer is optional.

Figure 3 — Front end design with 6 % Luer slip for Luer lock adapter

5.1.3 Dimensions for staked needle (SN) syringes

The dimensions of the syringe barrel shall be as shown in Figure 4 and as given in Table 1, except the wall thickness, which is given for information only.

© ISO 2024 – All rights reserved

Documents
Document Sharing Hub
Full document details: BS ISO 11040-4:2024

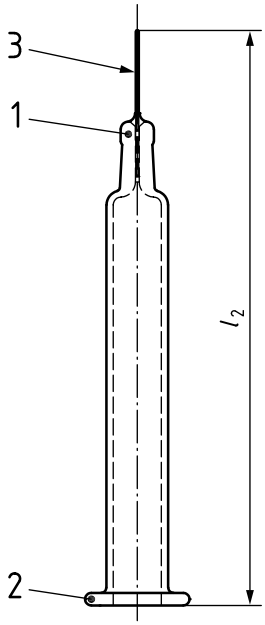

Key

1 front end

2 back end

3 staked needle

NOTE 1 The needle diameter and needle length are subject to agreement between the manufacturer and the customer.

NOTE 2 The design of the finger flange is subject to agreement between the manufacturer and the customer. Designs are shown in Figure 1.

Figure 4 — Example of a staked needle syringe

© ISO 2024 – All rights reserved

Documents
Document Sharing Hub
Full document details: BS ISO 11040-4:2024

Table 2 — Staked needle syringe dimensions (see Figure 4)

Dimensions in millimetres

Nominal volume ml	SN barrel		
	Needle length mm (inch)	**nom** l_2 mm	**max tol** mm
0,5	12,7 (1/2")	70,2	±1,5
0,5	15, 8 (5/8")	73,4 to 73,5	
1[a]	8,0 (5/16")	72	
1[a]	12,7 (1/2")	76,7	
1[a]	15, 8 (5/8")	79,9 to 81,0	
1[a]	25,4 (1")	89,4	
1[b]	12,7 (1/2")	59,4	
1[b]	15, 8 (5/8")	62,6 to 63,5	
1[b]	25,4 (1")	72,1	
1,5	12,7 (1/2")	66,7 to 66,9	
1,5	15, 8 (5/8")	69,9 to 70,8	
1,5	25,4 (1")	79,4	
2,25	8,0 (5/16")	73,5	
2,25	12,7 (1/2")	78,1 to 78,3	
2,25	15, 8 (5/8")	81,4	

[a] Long version.

[b] Short version

NOTE 1 Barrel dimensions for SN syringes are the same as listed in Table 1.

NOTE 2 1 inch = 25,4 mm.

5.1.4 Front end design for staked needle syringe

Figure 5 shows a typical front end design for a staked needle syringe.

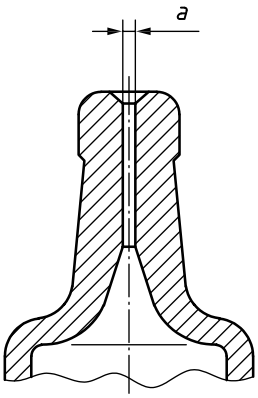

[a] Diameter depending on needle size.

Figure 5 — Example of a front end design for a staked needle syringe

© ISO 2024 – All rights reserved

Documents
Document Sharing Hub
Full document details: BS ISO 11040-4:2024

5.2 Functional testing of Luer connection

The functional performance of the glass syringe barrel with regard to the conical connection to a 6 % Luer socket connector fitting shall be demonstrated through performance testing with the socket reference connectors made of plastic instead of steel.

NOTE The forming process of glass syringe front end can result in a “wavy” Luer connector surface finish that is incompatible with the use of steel reference connectors for liquid and air leakage, separation force, and unscrewing torque type tests. In addition, the 6 % Luer slip of glass syringe barrels are often roughened on customer request.

For the purpose of demonstrating the functional performance of the syringe Luer connection and the equivalent safety of the connection, a plastic reference connector shall conform with the dimensional requirements of ISO 80369-7.

The selected plastic material for the reference connectors shall be chosen for being representative for the normal use condition for injection. A rationale shall be developed for the selection of material(s).

5.3 Material

The material of the syringe barrel shall be colourless (cl) or amber (br) glass of the hydrolytic resistance grain class HGA 1 in accordance with ISO 720.

Material requirements are also covered by national or regional pharmacopoeias. See, for example, requirements for glass Type I in Ph.Eur. 3.2.1[17], USP <660>[24] and in JP 7.01[37].

5.4 Performance requirements

5.4.1 Hydrolytic resistance glass barrel

Hydrolytic resistance of syringe barrel shall be determined in accordance with ISO 4802-1 or ISO 4802-2.

Syringe barrel requirements are also covered by national or regional pharmacopoeias. See, for example, requirements for glass Type I in Ph.Eur. 3.2.1[17], USP <660>[24] and in JP 7.01[37].

5.4.2 Annealing quality

The maximum residual stress shall not produce an optical retardation exceeding 40 nm/mm of glass thickness when the syringe barrel is viewed in a strain viewer.

The test method for residual stress is subject to agreement between the manufacturer and the customer.

5.4.3 Lubrication of the inner surface

For syringe barrels whose inner surfaces have been lubricated, 6.5.1.2 shall apply.

5.4.4 Flange breakage resistance

Syringe barrels shall provide an appropriate flange breakage resistance. Depending on the intended use the finger flange breakage resistance requirements shall be discussed between manufacturer and customer.

The flange breakage resistance shall be determined in accordance with C.1.

The flange breakage resistance for all finger flange designs, as shown in Figure 1, shall be ≥35 N.

NOTE The design of the finger flange can result in different breakage resistance forces. The breakage resistance forces from lowest to high are: cut flange lower than large round flange lower than small round flange [Figure 1 b) < Figure 1 c) < Figure 1 d)].

© ISO 2024 – All rights reserved

Documents
Document Sharing Hub
Full document details: BS ISO 11040-4:2024