BS ISO 11090-2:2014

BSI Standards Publication

# Test conditions for die sinking electro-discharge machines (die sinking EDM) — Testing of the accuracy

## Part 2: Double-column machines (slide-head type)

bsi.

...making excellence a habit.™

Document Sharing Hub

Full document details: BS ISO 11090-2:2014

## National foreword

This British Standard is the UK implementation of ISO 11090-2:2014. It supersedes BS ISO 11090-2:1998 which is withdrawn.

The UK participation in its preparation was entrusted to Technical Committee MTE/1/2, Machine tools - Accuracy.

A list of organizations represented on this committee can be obtained on request to its secretary.

This publication does not purport to include all the necessary provisions of a contract. Users are responsible for its correct application.

© The British Standards Institution 2014. Published by BSI Standards Limited 2014

ISBN 978 0 580 77145 3

ICS 25.120.40

**Compliance with a British Standard cannot confer immunity from legal obligations.**

This British Standard was published under the authority of the Standards Policy and Strategy Committee on 31 December 2014.

**Amendments issued since publication**

| Date | Text affected |
|---|---|

Documents
Document Sharing Hub

Full document details: BS ISO 11090-2:2014

# INTERNATIONAL STANDARD

# ISO 11090-2

Second edition
2014-12-01

# Test conditions for die sinking electro-discharge machines (die sinking EDM) — Testing of the accuracy —

## Part 2: Double-column machines (slide-head type)

*Conditions d'essai des machines d'électroérosion en plongée (EDM en plongée) — Contrôle de l'exactitude —*

*Partie 2: Machines à deux montants (type à tête mobile)*

Reference number
ISO 11090-2:2014(E)

Documents
Document Sharing Hub

© ISO 2014

Full document details: BS ISO 11090-2:2014

**COPYRIGHT PROTECTED DOCUMENT**

© ISO 2014

All rights reserved. Unless otherwise specified, no part of this publication may be reproduced or utilized otherwise in any form or by any means, electronic or mechanical, including photocopying, or posting on the internet or an intranet, without prior written permission. Permission can be requested from either ISO at the address below or ISO's member body in the country of the requester.

ISO copyright office
Case postale 56 • CH-1211 Geneva 20
Tel. + 41 22 749 01 11
Fax + 41 22 749 09 47
E-mail copyright@iso.org
Web www.iso.org

Published in Switzerland



© ISO 2014 – All rights reserved

Documents
Document Sharing Hub

Full document details: BS ISO 11090-2:2014

# Contents

Page

**Foreword** ..... **iv**

**Introduction** ..... **v**

**1 Scope** ..... **1**

**2 Normative references** ..... **1**

**3 Terms and definitions** ..... **1**

**4 Terminology and designation of axes** ..... **2**
4.1 Slide-head type ..... 2

**5 Preliminary remarks** ..... **3**
5.1 Measurement units ..... 3
5.2 Reference to ISO 230-1 ..... 3
5.3 Machine levelling ..... 3
5.4 Testing sequence ..... 3
5.5 Tests to be performed ..... 3
5.6 Measuring instruments ..... 4
5.7 Software compensation ..... 4
5.8 Minimum tolerance ..... 4
5.9 Machining test ..... 4
5.10 Positioning tests and reference to ISO 230-2 ..... 4

**6 Geometric tests** ..... **5**
6.1 Linear axes of motion ..... 5
6.2 Table ..... 12
6.3 Head, quill and spindle ..... 14

**7 Positioning tests for numerically controlled axes** ..... **17**

**8 Machining test** ..... **21**

**Annex A** (informative) **Equivalent terms in Dutch, German, Italian, Swedish, Persian, and Japanese** ..... **22**

**Bibliography** ..... **23**

© ISO 2014 – All rights reserved


Documents
Document Sharing Hub
Full document details: BS ISO 11090-2:2014

# Foreword

ISO (the International Organization for Standardization) is a worldwide federation of national standards bodies (ISO member bodies). The work of preparing International Standards is normally carried out through ISO technical committees. Each member body interested in a subject for which a technical committee has been established has the right to be represented on that committee. International organizations, governmental and non-governmental, in liaison with ISO, also take part in the work. ISO collaborates closely with the International Electrotechnical Commission (IEC) on all matters of electrotechnical standardization.

The procedures used to develop this document and those intended for its further maintenance are described in the ISO/IEC Directives, Part 1. In particular the different approval criteria needed for the different types of ISO documents should be noted. This document was drafted in accordance with the editorial rules of the ISO/IEC Directives, Part 2 (see www.iso.org/directives).

Attention is drawn to the possibility that some of the elements of this document may be the subject of patent rights. ISO shall not be held responsible for identifying any or all such patent rights. Details of any patent rights identified during the development of the document will be in the Introduction and/or on the ISO list of patent declarations received (see www.iso.org/patents).

Any trade name used in this document is information given for the convenience of users and does not constitute an endorsement.

For an explanation on the meaning of ISO specific terms and expressions related to conformity assessment, as well as information about ISO's adherence to the WTO principles in the Technical Barriers to Trade (TBT), see the following URL: Foreword — Supplementary information.

The committee responsible for this document is ISO/TC 39, *Machine tools*, Subcommittee SC 2, *Test conditions for metal cutting machine tools.*

This second edition cancels and replaces the first edition (ISO 11090-2:1998), which has been technically revised.

ISO 11090 consists of the following parts, under the general title *Test conditions for die sinking electro-discharge machines (die sinking EDM) — Testing of the accuracy*:

— *Part 1: Single-column machines (cross-slide table type and fixed table type)*

— *Part 2: Double-column machines (slide-head type)*


© ISO 2014 – All rights reserved
Documents
Document Sharing Hub
Full document details: BS ISO 11090-2:2014

# Introduction

The purpose of this part of ISO 11090 is to standardize methods of testing normal accuracy and general-purpose die sinking electro-discharge machines (die sinking EDM).

In this part of ISO 11090, the tolerances for G1, G2, G3, G5, P1, P2, P3, and P4 have been changed from those in ISO 11090-2:1998.

The machine axis designations are changed from ISO 11090-2:1998 to comply with ISO 841:2001.

Cross-slide table type machines (ISO 11090-2:1998, 3.2) are deleted due to their limited availability in today's market. The following tests in ISO 11090-2:1998 are deleted due to the limited availability of the reference T-slot in typical machines in today's market: G9 (checking of straightness of the reference T-slot or reference surface of the table) and G10 (checking of parallelism between the reference T-slot or reference surface of the table and the x-axis motion).

© ISO 2014 – All rights reserved

Documents
Document Sharing Hub
Full document details: BS ISO 11090-2:2014

Documents
Document Sharing Hub

INTERNATIONAL STANDARD ISO 11090-2:2014(E)

# Test conditions for die sinking electro-discharge machines (die sinking EDM) — Testing of the accuracy —

## Part 2: Double-column machines (slide-head type)

## 1 Scope

This part of ISO 11090 specifies, with reference to ISO 230-1 and ISO 230-2, geometric and machining tests and tests for checking accuracy and repeatability of numerically controlled positioning axes for normal accuracy and general-purpose die sinking electro-discharge machines (die sinking EDM). It also specifies the applicable tolerances corresponding to the above-mentioned tests.

This part of ISO 11090 is applicable to double-column machines of slide-head type.

This part of ISO 11090 deals only with the verification of accuracy of the machine. It does not apply to the testing of the machine operation (vibrations, abnormal noises, stick-slip motion of components, etc.) or to the checking of its characteristics (such as speeds, feeds, etc.), which should generally be checked before the testing of the accuracy.

This part of ISO 11090 provides the terminology used for the principal components of the machine and the designation of the axes with reference to ISO 841:2001.

NOTE In addition to the terms used in the official ISO languages (English and French), Annex A of this part of ISO 11090 gives the equivalent terms in the Dutch, German, Italian, Swedish, Persian, and Japanese languages. These are published under the responsibility of the national member bodies for Netherlands (NEN), Germany (DIN), Italy (UNI), Sweden (SIS), Iran (ISIRI), and Japan (JISC). However, only the terms given in the official languages can be considered as ISO terms.

## 2 Normative references

The following referenced documents in whole or in part, are normatively referenced in this document and are indispensable for the application of this document. For dated references, only the edition cited applies. For undated references, the latest edition of the referenced document (including any amendments) applies.

ISO 230-1:2012, *Test code for machine tools — Part 1: Geometric accuracy of machines operating under no-load or quasi-static conditions*

ISO 230-2:2014, *Test code for machine tools — Part 2: Determination of accuracy and repeatability of positioning of numerically controlled axes*

## 3 Terms and definitions

For the purposes of this document, the following terms and definitions apply.

**3.1**
**electro-discharge machines**
machine tools for the removal of material in dielectric fluid by electro-discharges, which are separated in time and randomly distributed in space, between two electrically conductive electrodes (the tool electrode and the workpiece electrode), and where the energy in the discharge is controlled

© ISO 2014 – All rights reserved

Documents
Document Sharing Hub
Full document details: BS ISO 11090-2:2014

**3.2**
**die sinking electro-discharge machines**
machine tools for the removal of material by electro-discharge machining through the application of a tool electrode whose geometry matches (defines) the desired shape of the workpiece feature

**3.3**
**wire electro-discharge machines**
machine tools for the removal of material by electro-discharge machining through the application of a wire electrode to produce prismatic and more complex shapes in a workpiece

## 4 Terminology and designation of axes

### 4.1 Slide-head type

See Figure 1 and Table 1.

NOTE The machine axis designations in Figure 1 comply with ISO 841:2001. However, X- and Y-axis designations may be interchanged to suit axes lengths and/or operator position.

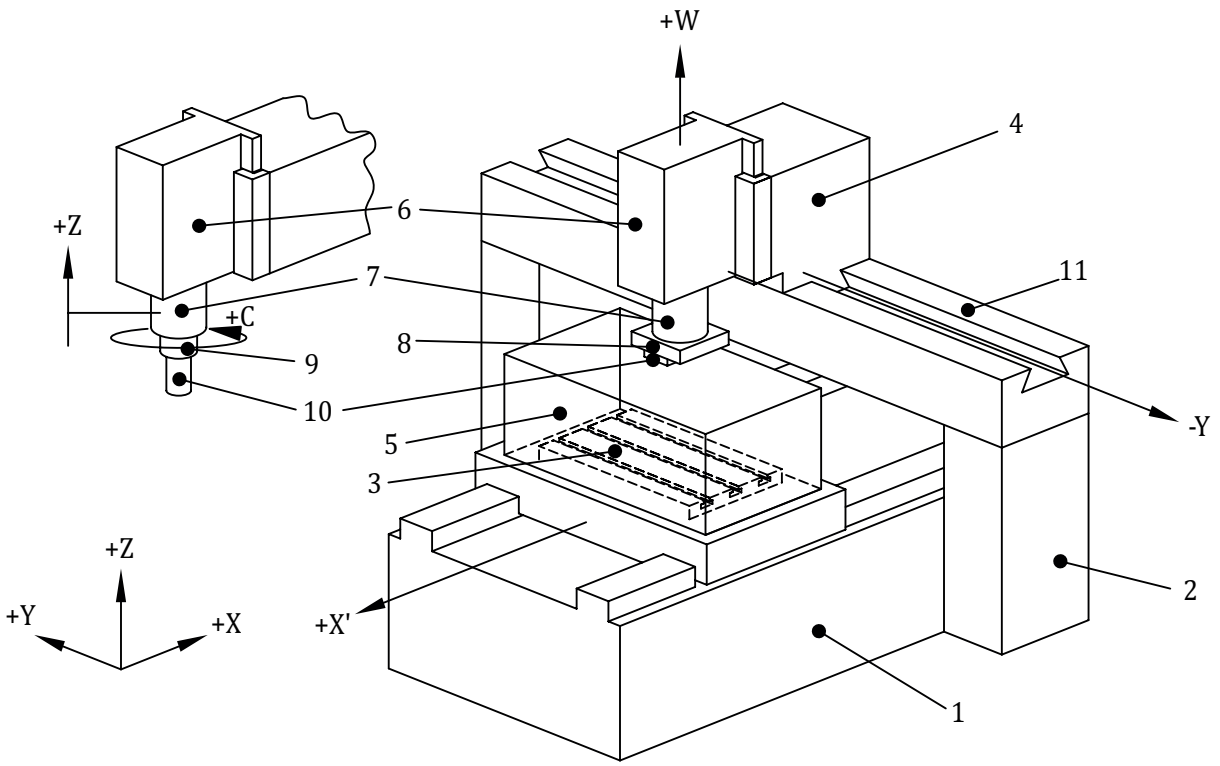


NOTE See keys in Table 1.

**Figure 1 — Double-column machine with sliding head**

**Table 1 — Keys for Figure 1**

| Key | English | French |
|---|---|---|
| 1 | bed | banc |
| 2 | bridge column | montant |
| 3 | table (X-axis) | table (axe X) |
| 4 | saddle (Y-axis) | chariot transversal (axe Y) |


© ISO 2014 – All rights reserved
Documents
Document Sharing Hub
Full document details: BS ISO 11090-2:2014

**Table 1** *(continued)*

| Key | English | French |
|---|---|---|
| 5 | work tank | réservoir de travail |
| 6 | head (W-axis) | tête de travail (axe W) |
| 7 | quill (Z-axis) | coulisse (axe Z) |
| 8 | electrode platen | porte-électrode |
| 9 | spindle (C-axis) | broche (axe C) |
| 10 | electrode | electrode |
| 11 | bridge | traverse |

# 5 Preliminary remarks

## 5.1 Measurement units

In this part of ISO 11090, all linear dimensions, deviations, and corresponding tolerances are expressed in millimetres. Angular dimensions are expressed in degrees and angular deviations and the corresponding tolerances are expressed primarily in ratios, but in some cases, microradians or arcseconds can be used for clarification purposes. The following expression should be used for the conversion of angular deviations or tolerances:

$$0{,}010/1\,000=10\times10^{-6}=10\ \mu\text{rad}\cong2'' \quad (1)$$

## 5.2 Reference to ISO 230-1

For the application of this part of ISO 11090, reference shall be made to ISO 230-1 especially for the installation of the machine before testing, warming up of the spindle and other moving parts, the description of measuring methods, and recommended accuracy of testing equipment.

In the “Observations” block of the tests described in Clauses 6, 7, and 8, the instructions are preceded with reference to the corresponding clause/subclause in ISO 230-1 in cases where the test concerned is in compliance with the specifications. Tolerances are given for each geometric test (see G1 to G12).

## 5.3 Machine levelling

Prior to conducting tests on a machine, the machine should be levelled according to the recommendations of the manufacturer/supplier (see ISO 230-1:2012, 6.1.2).

## 5.4 Testing sequence

The sequence in which the geometric tests are given in no way defines the practical order of testing. In order to make the mounting of instruments or gauging easier, the tests can be performed in any order.

## 5.5 Tests to be performed

When testing a machine tool, it is not always necessary or possible to carry out all the tests given in this part of ISO 11090. When the tests are required for acceptance purposes, the choice of tests relating to the components and/or the properties of the machine of interest is at the discretion of the user, in agreement with the manufacturer/supplier. The tests to be used are to be clearly stated when ordering a machine tool. A mere reference to this part of ISO 11090 for the acceptance tests, without specifying the tests to be carried out and without agreement on the relevant expenses, cannot be considered as binding for any contracting parties.

© ISO 2014 – All rights reserved

Documents
Document Sharing Hub
Full document details: BS ISO 11090-2:2014