BS ISO 11221:2011

BSI Standards Publication

Space systems — Space solar panels — Spacecraft charging induced electrostatic discharge test methods

bsi.

...making excellence a habit.™

Document Sharing Hub

Full document details: BS ISO 11221:2011

National foreword

This British Standard is the UK implementation of ISO 11221:2011.

The UK participation in its preparation was entrusted to Technical Committee ACE/68/-/1, Space systems and operations - Design, Engineering and Production.

A list of organizations represented on this committee can be obtained on request to its secretary.

This publication does not purport to include all the necessary provisions of a contract. Users are responsible for its correct application.

© BSI 2011

ISBN 978 0 580 66381 9

ICS 49.140

Compliance with a British Standard cannot confer immunity from legal obligations.

This British Standard was published under the authority of the Standards Policy and Strategy Committee on 31 August 2011.

Amendments issued since publication

Date	Text affected

Documents
Document Sharing Hub

Full document details: BS ISO 11221:2011

INTERNATIONAL STANDARD

ISO 11221

First edition
2011-08-01

Space systems — Space solar panels — Spacecraft charging induced electrostatic discharge test methods

Systèmes spatiaux — Panneaux solaires spatiaux — Matériaux d'essai de décharge électrostatique induite par la charge du vaisseau spatial

Reference number
ISO 11221:2011(E)

Documents
Document Sharing Hub

© ISO 2011

Full document details: BS ISO 11221:2011

COPYRIGHT PROTECTED DOCUMENT

© ISO 2011

All rights reserved. Unless otherwise specified, no part of this publication may be reproduced or utilized in any form or by any means, electronic or mechanical, including photocopying and microfilm, without permission in writing from either ISO at the address below or ISO's member body in the country of the requester.

ISO copyright office
Case postale 56 • CH-1211 Geneva 20
Tel. + 41 22 749 01 11
Fax + 41 22 749 09 47
E-mail copyright@iso.org
Web www.iso.org

Published in Switzerland

Documents
Document Sharing Hub
© ISO 2011 – All rights reserved

Full document details: BS ISO 11221:2011

Contents

Page

Foreword iv

1 Scope 1

2 Terms and definitions 1

3 Symbols and abbreviated terms 5
3.1 Symbols 5
3.2 Abbreviated terms 7

4 Tailoring 7

5 Test Items 7

6 Preliminary tests for ESD inception statistics 10
6.1 Purpose 10
6.2 Test facility 10
6.3 Test coupon 10
6.4 External circuit 10
6.5 Test procedures 11
6.6 Estimation of number of ESD events in orbit 11

7 Qualification test for secondary arc 12
7.1 Purpose 12
7.2 Triggering method and test facility 12
7.3 External circuit 12
7.4 CIC gap test — Test coupon and procedures 13
7.5 Panel test — Test coupon and procedures 13
7.6 Success criteria 13

8 Characterization tests for robustness to ESD and plasma interaction 14
8.1 Power degradation 14
8.2 Secondary arc 15
8.3 Power leakage to plasma 15
8.4 Solar array back surface test 17

9 Test report 17

Annex A (informative) **Plasma interaction and electrostatic discharge effects on solar array** 19

Annex B (informative) **Secondary arc qualification processes** 22

Annex C (normative) **Chamber size for a test using LEO-like plasma** 23

Annex D (informative) **ESD events analysis** 24

Annex E (informative) **Spacecraft charging analysis** 27

Annex F (informative) **Derivation of theoretical surface flashover current** 29

Annex G (normative) **External circuit of secondary arc test** 31

Annex H (informative) **Solar cell I-V characteristics measurement** 36

Annex I (informative) **Secondary arc statistics** 38

Annex J (informative) **Solar array back surface test** 41

Bibliography 42

Documents
Document Sharing Hub

© ISO 2011 – All rights reserved

Full document details: BS ISO 11221:2011

Foreword

ISO (the International Organization for Standardization) is a worldwide federation of national standards bodies (ISO member bodies). The work of preparing International Standards is normally carried out through ISO technical committees. Each member body interested in a subject for which a technical committee has been established has the right to be represented on that committee. International organizations, governmental and non-governmental, in liaison with ISO, also take part in the work. ISO collaborates closely with the International Electrotechnical Commission (IEC) on all matters of electrotechnical standardization.

International Standards are drafted in accordance with the rules given in the ISO/IEC Directives, Part 2.

The main task of technical committees is to prepare International Standards. Draft International Standards adopted by the technical committees are circulated to the member bodies for voting. Publication as an International Standard requires approval by at least 75 % of the member bodies casting a vote.

Attention is drawn to the possibility that some of the elements of this document may be the subject of patent rights. ISO shall not be held responsible for identifying any or all such patent rights.

ISO 11221 was prepared by Technical Committee ISO/TC 20, *Aircraft and space vehicles*, Subcommittee SC 14, *Space systems and operations*.

© ISO 2011 – All rights reserved
Documents
Document Sharing Hub
Full document details: BS ISO 11221:2011

INTERNATIONAL STANDARD ISO 11221:2011(E)

Space systems — Space solar panels — Spacecraft charging induced electrostatic discharge test methods

1 Scope

This International Standard specifies qualification and characterization test methods to simulate plasma interactions and electrostatic discharges on solar array panels in space. This International Standard is applicable to solar array panels made of crystalline silicon, gallium arsenide (GaAs) or multi-junction solar cells. This International Standard addresses only surface discharges on solar panels.

2 Terms and definitions

For the purposes of this document, the following terms and definitions apply.

2.1
active gap
gap between solar cells across which a potential difference is present when the solar array power is available

2.2
blow-off
emission of negative charges into space due to an electrostatic discharge

2.3
collisionless plasma
plasma in which the mean free paths of electron-neutral, ion-neutral and coulomb collisions are longer than the scale length of interest

NOTE Chamber length is an example of a scale length of interest.

2.4
differential charging
spacecraft charging where any two points are charged to different potentials

2.5
differential capacitance
capacitance between any two points in a spacecraft, especially between the insulator surface and the spacecraft body

2.6
differential voltage
potential difference between any two points in a spacecraft during spacecraft charging, especially between the insulator exterior surface potential and the spacecraft chassis potential

2.7
discharge inception voltage
lowest voltage at which discharges of specified magnitude will recur when a DC voltage is applied between any two points in a spacecraft, especially between the insulator surface and the spacecraft body

© ISO 2011 – All rights reserved

Documents
Document Sharing Hub
Full document details: BS ISO 11221:2011

2.8
electrical breakdown
failure of the insulation properties of a dielectric, resulting in a sudden release of charge with possible damage to the dielectric concerned

2.9
electric propulsion
spacecraft propulsion system in which the thrust is generated by accelerating charged particles that are neutralized before they are ejected in order to produce a jet

2.10
electrostatic discharge
electrical breakdown of dielectric or gas or vacuum gaps, and also of surface interface of dissimilar materials, caused by differential charging of parts of dielectric materials and their interfaces

2.11
gap distance
distance between biased cells or conductors

2.12
glow discharge
gaseous discharge with a surface glow near the cathode surface

NOTE The origin of the ionized gas is mostly ambient neutral gas molecules rather than metal vapour from the cathode surface.

2.13
inverted potential gradient
inverted voltage gradient
result of differential charging where the insulating surface or dielectric reaches a positive potential with respect to the neighbouring conducting surface or metal

NOTE This phenomenon is also known as PDNM (positive dielectric negative metal).

2.14
non-sustained arc
passage of current from an external source through a conductive path that lasts only while the primary discharge current flows

See Figure 1.

2.15
normal potential gradient
normal voltage gradient
result of differential charging where the insulating surface or dielectric reaches a negative potential with respect to the neighbouring conducting surface or metal

NOTE This phenomenon is also known as NDPM (negative dielectric positive metal).

2.16
permanent sustained arc
passage of current from an external source through a conductive path that keeps flowing until the external source is intentionally shut down

See Figure 1.

NOTE Some permanent sustained arcs may leave a permanent conductive path even after the shut-down.

2.17
Poisson process
stochastic process in which events occur independently of one another

© ISO 2011 – All rights reserved
Documents
Document Sharing Hub
Full document details: BS ISO 11221:2011

2.18
power generation voltage
potential difference between the positive and negative terminals of a solar array string

2.19
primary arc
trigger arc
developed phase of a primary discharge, under an inverted potential gradient, which is associated with cathodic spot formation at a metallic or semiconductor surface

2.20
primary discharge
initial electrostatic discharge which, by creating a conductive path, can trigger a secondary arc

See Figure 1.

NOTE The current can include blow-off current and surface flashover current.

2.21
punch-through
dielectric breakdown between two sides of an insulator material

2.22
ram
space in front of and adjacent to a spacecraft in which the plasma density can be enhanced by the motion of the spacecraft

2.23
satellite capacitance
absolute capacitance
capacitance between a satellite body and the ambient plasma

2.24
secondary arc
passage of current from an external source, such as a solar array, through a conductive path initially generated by a primary discharge

NOTE Figure 1 shows the various stages of a secondary arc.

2.25
snapover
phenomenon caused by secondary electron emission that can lead to electron collection on insulating surfaces in an electric field

2.26
solar array front surface
solar array surface where solar cells are laid down

NOTE Solar cells are laid down on the side of a solar panel that normally faces the sun.

2.27
solar array back surface
solar array surface where solar cells are not laid down

NOTE Solar cells are not laid down on the side of a solar panel that normally faces away from the sun.

2.28
surface charging
deposition of electrical charges onto, or their removal from, external surfaces

© ISO 2011 – All rights reserved

Documents
Document Sharing Hub
Full document details: BS ISO 11221:2011

2.29
surface flashover
surface discharge propagating laterally over a dielectric material

NOTE Surface flashover is sometimes called a “brushfire discharge”.

2.30
temporary sustained arc
passage of current from an external source through a conductive path that lasts longer than a primary discharge current pulse but terminates without leaving a permanent conductive path

See Figure 1.

2.31
wake
trail of rarefied plasma left behind by a moving spacecraft

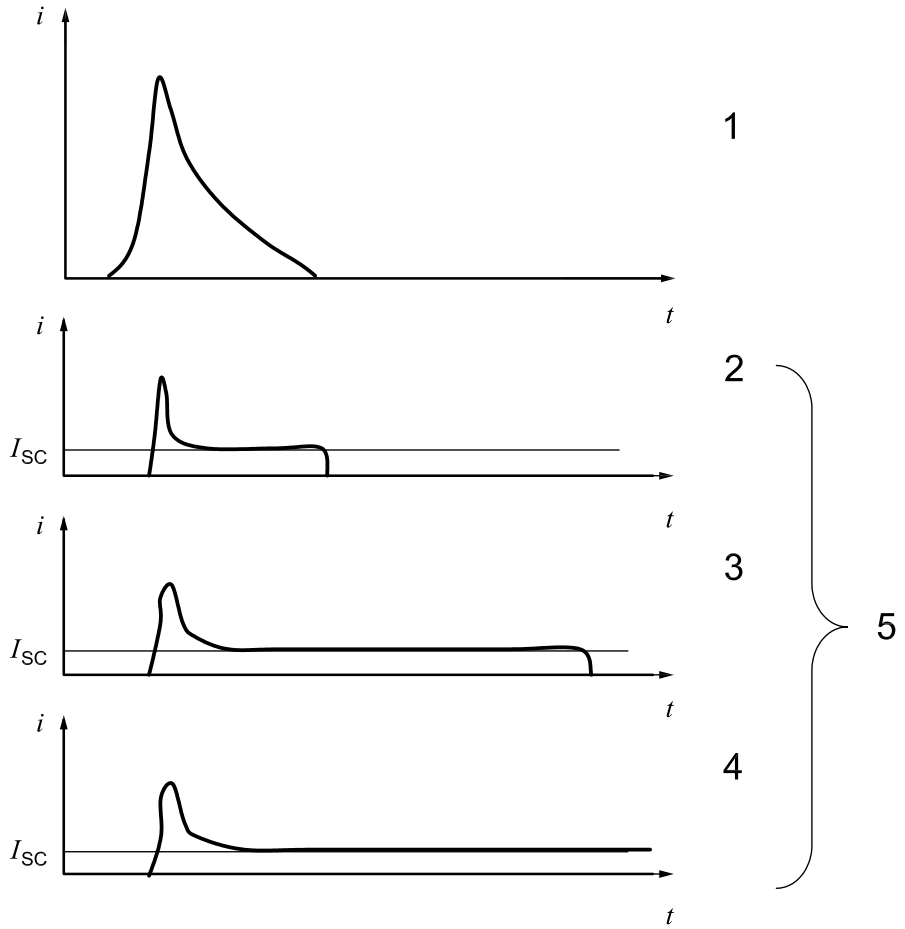

Key
1 primary discharge (blow-off + flashover)
2 non-sustained arc (NSA)
3 temporary sustained arc (TSA)
4 permanent sustained arc (PSA)
5 secondary arc

i current
I_{sc} short-circuit current of one or more solar array circuits
t time

The primary discharge is fed by absolute and differential capacitances. The secondary arc is fed by the solar array power.

Figure 1 — Stages of secondary arc

© ISO 2011 – All rights reserved
Documents
Document Sharing Hub
Full document details: BS ISO 11221:2011

3 Symbols and abbreviated terms

3.1 Symbols

A_s area of surface of plasma

C_{BC} bypass capacitance

C_{CG} differential capacitance

C_{GS} capacitor representing capacitance between solar panel structure and ambient plasma

C_{kapton} capacitor representing capacitance underneath the cells through the Kapton layer

C_{sat} satellite capacitance

C_{string} capacitor representing capacitance of solar array string

C_V capacitance per unit area of coverglass

C_1 capacitor representing capacitance of solar array string and capacitance underneath the cells through the Kapton layer

C_2 capacitor representing capacitance of solar array string and capacitance underneath the cells through the Kapton layer

C_3 capacitor representing capacitance of solar array string and capacitance underneath the cells through the Kapton layer

D_1 fast switching diode

D_2 fast switching diode

D_3 fast switching diode

d_{sh} sheath thickness

I_0 reverse saturation-current density, in amperes per square metre (A/m^2)

I_1 power supply representing power generated by the solar array

I_{sc} short-circuit current of one or more solar array circuits

$I_{section}$ current of a solar array section

I_{string} current of a solar array string

i current

j number of bins

k Boltzmann constant

L_{ext} inductance to form the pulse current shape

n diode constant

© ISO 2011 – All rights reserved

Documents
Document Sharing Hub
Full document details: BS ISO 11221:2011

P_i probability that an event occurs in the i-th bin

Q charge

q elementary charge

R resistance

R_{ext} resistance to form the pulse current shape

R_L resistance to adjust the voltage between two strings under test

$R_{section}$ $U_{section}/I_{section}$ resistance needed to get the right voltage and current in the loop simulating the solar panels section

R_{string} U_{string}/I_{string} resistance needed to get the right voltage and current across the solar cells simulating the solar array string under arcing test

r radius of plasma

T temperature, in kelvins (K)

T_e electron temperature

T_i ion temperature

t time

t_{ESD} time to threshold differential voltage

U_1 constant current source

U_2 constant voltage source

$U_{section}$ voltage of a solar array section

U_{string} voltage of a solar array string

V_b power supply representing charging potential of spacecraft body

v_p velocity of plasma wavefront

ΔV potential difference

θ angle

λ_D Debye length

ρ_e electron density

ρ_i ion density

ϕ_{CG} coverglass potential

ϕ_{sat} satellite body potential

© ISO 2011 – All rights reserved
Documents
Document Sharing Hub
Full document details: BS ISO 11221:2011

3.2 Abbreviated terms

eV electron volt (1 eV = 1,602 × 10^{-19} J)

CIC coverglass interconnect cell

ESD electrostatic discharge

GEO geosynchronous orbit

IPG inverted potential gradient

LEO low Earth orbit

NPG normal potential gradient

NSA non-sustained arc

PA primary arc

PEO polar Earth orbit

PI plasma interaction

PSA permanent sustained arc

TSA temporary sustained arc

4 Tailoring

Specifications described in this International Standard are tailorable upon agreement between the customer and the supplier.

5 Test items

NOTE Annex A provides an overview of the subject of spacecraft charging and electrostatic discharge (ESD) phenomena for readers who are not familiar with the subject.

The aims of the plasma interaction (PI) and ESD tests are to simulate the detrimental phenomena anticipated in space for a given solar array design, to evaluate a design's resistance to the phenomena and to provide data necessary for the judgment of qualification and characterization.

Figures 2 and 3 present the test items specified in this International Standard, with flow charts to summarize the logic flow of each test. The purpose of a preliminary test for ESD statistics is to define the statistics helpful for selecting the test parameters (such as the number of primary discharges inflicted upon a test coupon), defining the margins of the test parameters and defining the confidence level of the test results. If proper statistics for these numbers and probabilities are already available, the preliminary test is not required for the qualification of secondary arcs. Annex B provides a brief rationale of the structure of the flow chart in Figure 2.

© ISO 2011 – All rights reserved

Documents
Document Sharing Hub
Full document details: BS ISO 11221:2011

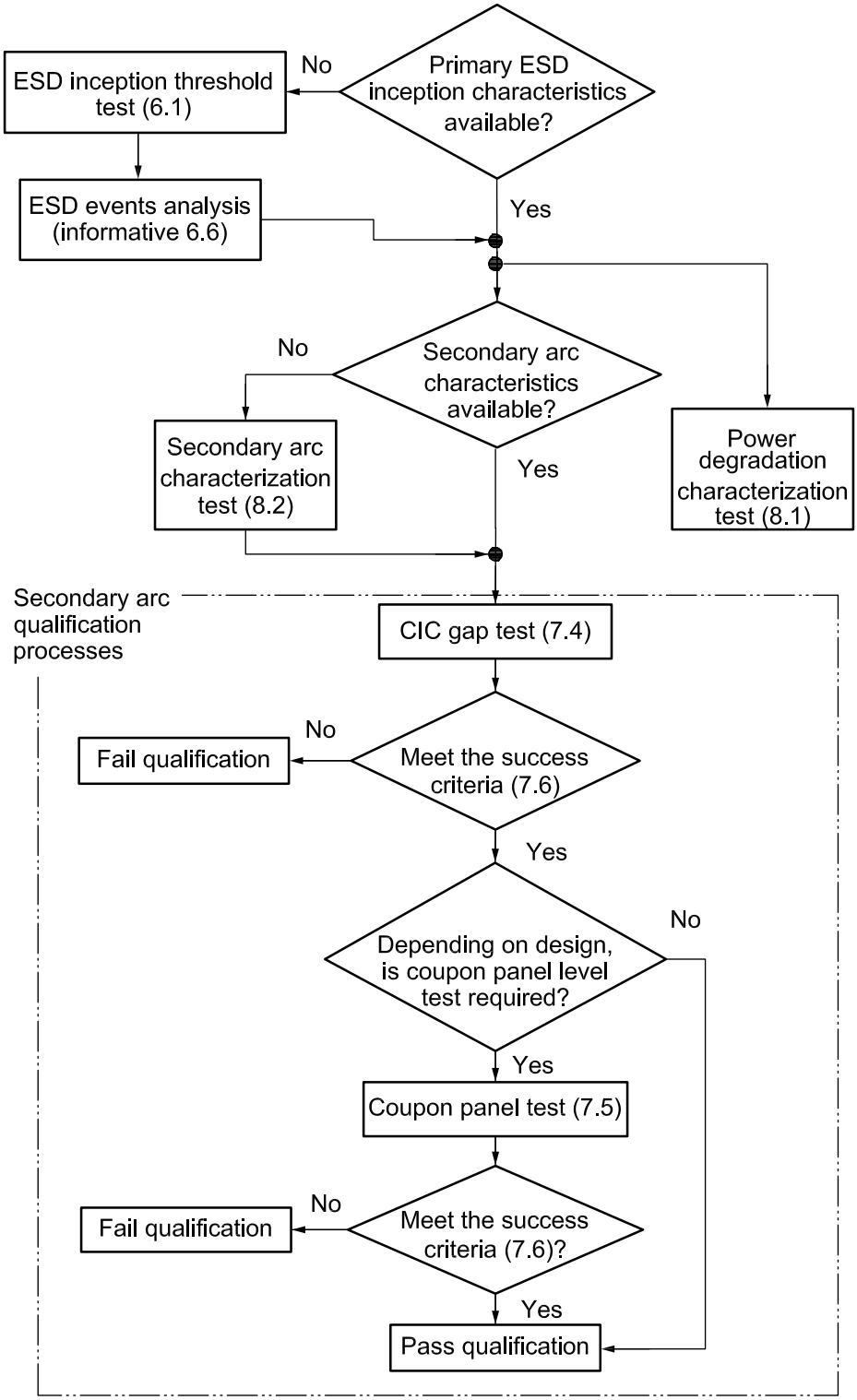

Figure 2 — Logic flow of ESD tests

© ISO 2011 – All rights reserved

Documents
Document Sharing Hub
Full document details: BS ISO 11221:2011

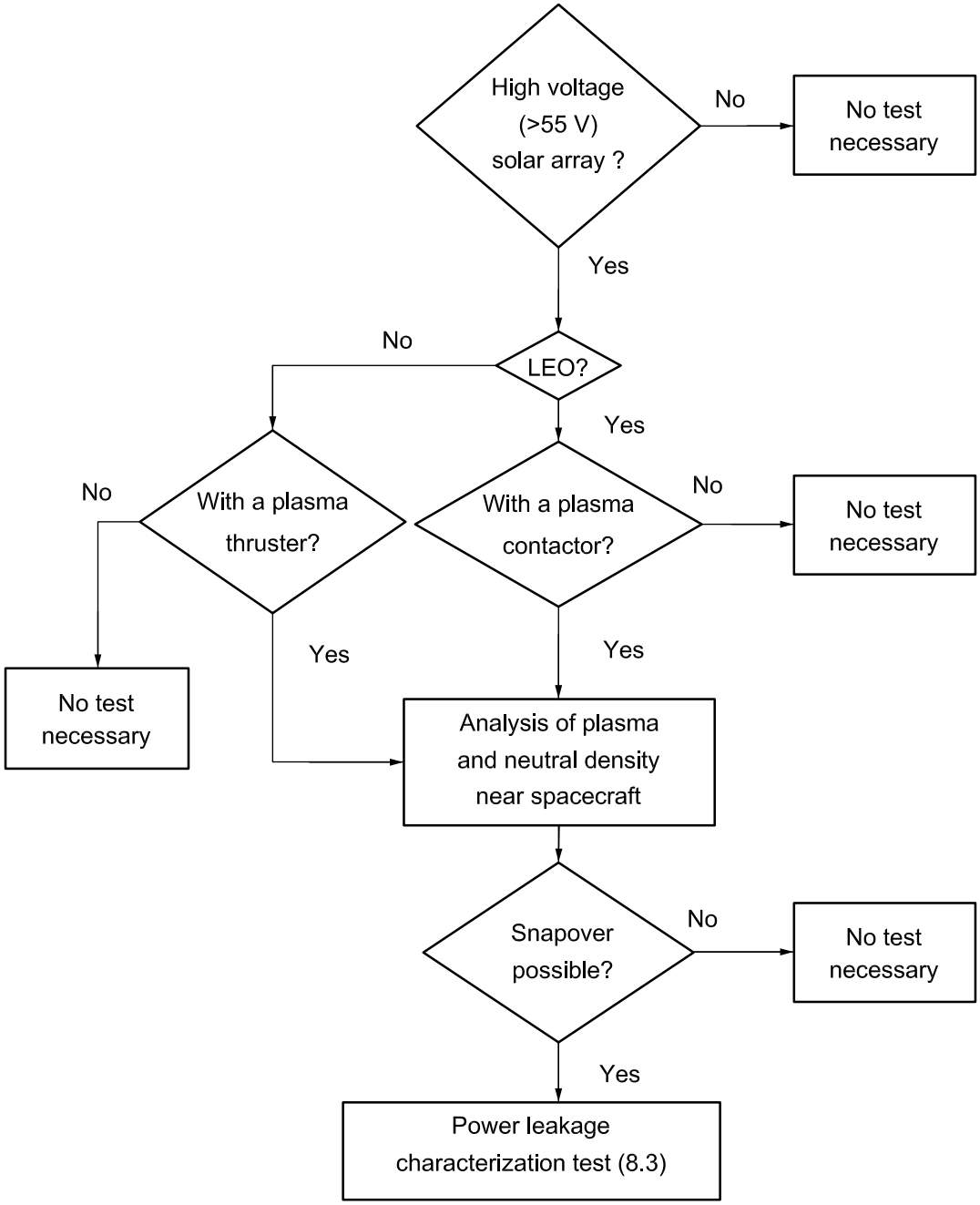

Figure 3 — Logic flow for determining the necessity of a power leakage characterization test

© ISO 2011 – All rights reserved

Documents
Document Sharing Hub
Full document details: BS ISO 11221:2011

6 Preliminary tests for ESD inception statistics

6.1 Purpose

The purpose of this test is to characterize the ESD (primary discharge) inception threshold in terms of differential voltage between the coverglasses and the solar array circuit. This differential voltage can be used as a tool to estimate the number of ESD events during the mission lifetime in orbit.

6.2 Test facility

The test facility shall be able to simulate the charging processes of a solar array insulator in orbit. If the solar array is for a GEO satellite, the solar array insulator shall be charged using either an energetic electron beam or UV irradiation, or a combination of both, in a vacuum chamber with a pressure lower than 1×10^{-3} Pa ($7{,}5 \times 10^{-6}$ Torr). The electron energy shall be less than 30 keV so that the charging takes place mostly over the insulator surface, and not below it. The vacuum chamber for a geosynchronous orbit (GEO) solar array test shall be equipped with an adequate device to determine the insulator charging potential, such as a non-contacting surface potential probe, preferably mounted on an (x)-(y) scanning device.

If the solar array is for a low Earth orbit (LEO) spacecraft, the solar array insulator shall be charged by a low-energy plasma with a temperature below 10 eV in a vacuum chamber with a pressure that guarantees a collisionless plasma. If the solar array is for a polar Earth orbit (PEO) spacecraft and auroral electrons are responsible for differential charging, the solar array insulator should be charged using an energetic electron beam. If the solar array is for a PEO spacecraft and low-energy ionospheric ions are responsible for differential charging, the solar array insulator should be charged using a low-energy plasma. See Annex C for the minimum chamber size for a low-energy plasma test.

The test facility shall be equipped with a device to record an adequate image of the test coupon during the test so that ESD locations can be identified either during or after the test.

6.3 Test coupon

The test coupon(s) shall consist of at least three strings of three cells to represent a cell surrounded by other cells. The test coupon(s) should

a) reflect the production variation with respect to parameters that can affect the ESD inception threshold, such as degree of grouting, coverglass overhang, cell spacing, etc. on the total number of cells on the test coupon(s),

b) include all the features of a flight panel, such as bus bars, through-holes, terminal strips, wire harness, hold-down, etc.,

c) include the mitigation techniques that represent the flight model as closely as possible, if the solar panel design involves ESD mitigation techniques such as a dissipative coating, and

d) consider the worst condition during the life of the spacecraft, such as after thermal cycling, repaired cells, and other conditions that can lead to a greater risk of ESD and secondary arcs.

6.4 External circuit

In the test, the vacuum chamber serves as the circuit ground. If the charging situation in space is the inverted potential gradient, bias the test coupon to a negative potential with a DC power supply. If the charging situation is the normal potential gradient, ground the test coupon. (See Figure 4 for a circuit diagram.) A small amount of capacitance may be connected to the DC power supply if a brighter flash of ESD light is needed to identify its location. Limit the capacitance so that the electrostatic energy dissipated does not cause degradation of the solar cells on the test coupon(s). An energy of less than 5 mJ is recommended. As the capacitance of a coupon alone sometimes exceeds the limit, external capacitance should not be used for a large coupon of more than about 20 cells. To record the ESD in this event, use a sensitive camera.

© ISO 2011 – All rights reserved
Documents
Document Sharing Hub
Full document details: BS ISO 11221:2011

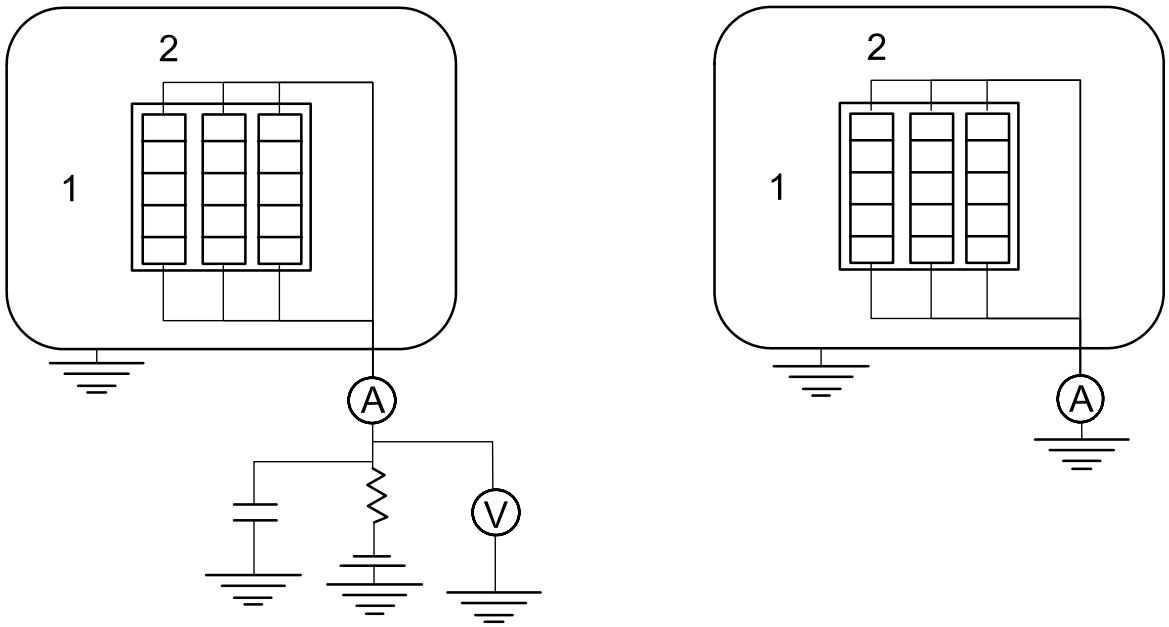

a) Inverted potential gradient **b) Normal potential gradient**

Key

1 coupon

2 vacuum chamber

Figure 4 — Test set-up for the ESD inception test

6.5 Test procedures

If an electron beam gun or a UV source is used for charging the test coupon, the test shall be carried out until a statistically significant number of ESD events, no less than 10, occur on the test coupon. The test coupon surface potential shall be measured repeatedly during the test by a non-contacting surface potential probe. The coupon surface potential closest to each ESD location shall be identified and recorded. The minimum differential voltage is the minimum value among all the ESD events recorded. Be aware of the uncertainties associated with the spatial resolution of the probe and the temporal variation of the potential depending on the time of measurement from the ESD inception.

If a low-energy plasma source is used, the differential charging voltage can be approximated by the chamber plasma potential, which is usually positive by several times the electron temperature, minus the negative coupon potential. The uncertainty is in the order of the electron temperature. The coupon bias voltage shall be varied to cover all the possible charging potentials in orbit. In the case of PEO spacecraft, the waiting time at each bias voltage should be no less than 20 min. In the case of LEO spacecraft, the waiting time at each bias voltage should be no less than 90 min. At low bias voltages where the probability of ESD is very low, a longer waiting time is recommended to improve the statistics. See Reference [1] for an example of characterizing the arc rate per unit time under a low-energy plasma environment. If the threshold is unknown, plot the arc rates at different bias voltages on a logarithmic scale and find the voltage where the probability of an arc over a given time becomes negligible, assuming that ESD inception is modelled as a Poisson process (see Reference [2] for an example).

6.6 Estimation of number of ESD events in orbit

It can be useful to analyse the number of ESD events expected in orbit as a basis for discussion to determine the number of primary discharges in the subsequent tests. See Annex D for details. Other methods of analysis may also be used to compute the number of ESD events.

© ISO 2011 – All rights reserved

Documents
Document Sharing Hub
Full document details: BS ISO 11221:2011