BS ISO 1143:2021

BSI Standards Publication

Metallic materials — Rotating bar bending fatigue testing

Documents
Document Sharing Hub

Full document details: BS ISO 1143:2021

National foreword

This British Standard is the UK implementation of ISO 1143:2021. It supersedes BS ISO 1143:2010, which is withdrawn.

The UK participation in its preparation was entrusted to Technical Committee ISE/101/6, Fatigue testing of metals and metal matrix composites.

A list of organizations represented on this committee can be obtained on request to its committee manager.

Contractual and legal considerations

This publication has been prepared in good faith, however no representation, warranty, assurance or undertaking (express or implied) is or will be made, and no responsibility or liability is or will be accepted by BSI in relation to the adequacy, accuracy, completeness or reasonableness of this publication. All and any such responsibility and liability is expressly disclaimed to the full extent permitted by the law.

This publication is provided as is, and is to be used at the recipient's own risk.

The recipient is advised to consider seeking professional guidance with respect to its use of this publication.

This publication is not intended to constitute a contract. Users are responsible for its correct application.

© The British Standards Institution 2021
Published by BSI Standards Limited 2021

ISBN 978 0 539 06769 9

ICS 77.040.10

Compliance with a British Standard cannot confer immunity from legal obligations.

This British Standard was published under the authority of the Standards Policy and Strategy Committee on 31 August 2021.

Amendments/corrigenda issued since publication

Date	Text affected

Documents
Document Sharing Hub

Full document details: BS ISO 1143:2021

INTERNATIONAL STANDARD

ISO 1143

Third edition
2021-07

Metallic materials — Rotating bar bending fatigue testing

Matériaux métalliques — Essais de fatigue par flexion rotative de barreaux

Reference number
ISO 1143:2021(E)

Documents
Document Sharing Hub

© ISO 2021

Full document details: BS ISO 1143:2021

COPYRIGHT PROTECTED DOCUMENT

© ISO 2021

All rights reserved. Unless otherwise specified, or required in the context of its implementation, no part of this publication may be reproduced or utilized otherwise in any form or by any means, electronic or mechanical, including photocopying, or posting on the internet or an intranet, without prior written permission. Permission can be requested from either ISO at the address below or ISO's member body in the country of the requester.

ISO copyright office
CP 401 • Ch. de Blandonnet 8
CH-1214 Vernier, Geneva
Phone: +41 22 749 01 11
Email: copyright@iso.org
Website: www.iso.org

Published in Switzerland

© ISO 2021 – All rights reserved

Documents
Document Sharing Hub

Full document details: BS ISO 1143:2021

Contents

Page

Foreword ... **iv**

1 Scope ... **1**

2 Normative references ... **1**

3 Terms and definitions ... **1**

4 Symbols ... **2**

5 Principle of test ... **2**

6 Shape and size of specimen ... **3**
6.1 Forms of the test section ... 3
6.2 Dimensions of specimens ... 8

7 Preparation of specimens ... **8**
7.1 General ... 8
7.2 Selection of the specimen and marking ... 8
7.3 Machining procedure ... 9
7.3.1 Heat treatment of test material ... 9
7.3.2 Machining criteria ... 9
7.3.3 Surface condition of specimens ... 9
7.3.4 Dimensional checks ... 10
7.4 Storage and handling ... 10

8 Accuracy of the testing apparatus ... **10**

9 Heating device and temperature measurement ... **11**

10 Test procedure ... **11**
10.1 Mounting the specimen ... 11
10.2 Application of force ... 12
10.3 Frequency selection ... 12
10.4 End of test ... 13
10.5 Procedure for testing at elevated temperature ... 13

11 Test report ... **14**

12 Presentation of fatigue test results ... **15**
12.1 Tabular presentation ... 15
12.2 Graphical presentation ... 15

13 Measurement uncertainty ... **16**
13.1 General ... 16
13.2 Test conditions ... 16
13.3 Test results ... 16

Annex A (normative) **Verification of the bending moment of rotating bar bending fatigue machines** ... **17**

Annex B (informative) **Example of a test report** ... **25**

Bibliography ... **26**

© ISO 2021 – All rights reserved

Documents
Document Sharing Hub

Full document details: BS ISO 1143:2021

Foreword

ISO (the International Organization for Standardization) is a worldwide federation of national standards bodies (ISO member bodies). The work of preparing International Standards is normally carried out through ISO technical committees. Each member body interested in a subject for which a technical committee has been established has the right to be represented on that committee. International organizations, governmental and non-governmental, in liaison with ISO, also take part in the work. ISO collaborates closely with the International Electrotechnical Commission (IEC) on all matters of electrotechnical standardization.

The procedures used to develop this document and those intended for its further maintenance are described in the ISO/IEC Directives, Part 1. In particular, the different approval criteria needed for the different types of ISO documents should be noted. This document was drafted in accordance with the editorial rules of the ISO/IEC Directives, Part 2 (see www.iso.org/directives).

Attention is drawn to the possibility that some of the elements of this document may be the subject of patent rights. ISO shall not be held responsible for identifying any or all such patent rights. Details of any patent rights identified during the development of the document will be in the Introduction and/or on the ISO list of patent declarations received (see www.iso.org/patents).

Any trade name used in this document is information given for the convenience of users and does not constitute an endorsement.

For an explanation of the voluntary nature of standards, the meaning of ISO specific terms and expressions related to conformity assessment, as well as information about ISO's adherence to the World Trade Organization (WTO) principles in the Technical Barriers to Trade (TBT), see www.iso.org/iso/foreword.html.

This document was prepared by Technical Committee ISO/TC 164, *Mechanical testing of metals*, Subcommittee SC 4, *Fatigue, fracture and toughness testing*.

The third edition cancels and replaces the second edition (ISO 1143:2010), which has been technically revised.

The main changes compared to the previous edition are as follows:

— A new Clause 13, Measurement uncertainty, has been added;

— a new Annex B, Example of a test report, has been added.

Any feedback or questions on this document should be directed to the user's national standards body. A complete listing of these bodies can be found at www.iso.org/members.html.

© ISO 2021 – All rights reserved
Documents
Document Sharing Hub
Full document details: BS ISO 1143:2021

Metallic materials — Rotating bar bending fatigue testing

WARNING — This document does not address safety or health concerns, should such issues exist, that may be associated with its use or application. It is the responsibility of the user of this document to establish any appropriate safety and health concerns, as well as to determine the applicability of any national or local regulatory limitations regarding the use of this document.

1 Scope

This document specifies the method for rotating bar bending fatigue testing of metallic materials. The tests are conducted at room temperature or elevated temperature in air, the specimen being rotated.

Fatigue tests on notched specimens are not covered by this document, since the shape and size of notched specimens have not been standardized. However, fatigue test procedures described in this document can be applied to fatigue tests of notched specimens.

2 Normative references

The following documents are referred to in the text in such a way that some or all of their content constitutes requirements of this document. For dated references, only the edition cited applies. For undated references, the latest edition of the referenced document (including any amendments) applies.

ISO 376, *Metallic materials — Calibration of force-proving instruments used for the verification of uniaxial testing machines*

ISO 1099, *Metallic materials — Fatigue testing — Axial force-controlled method*

ISO 12106, *Metallic materials — Fatigue testing — Axial-strain-controlled method*

ISO 12107, *Metallic materials — Fatigue testing — Statistical planning and analysis of data*

ISO 23718, *Metallic materials — Mechanical testing — Vocabulary*

3 Terms and definitions

For the purposes of this document, the terms and definitions given in ISO 1099, ISO 12106, ISO 12107, ISO 23718 and the following apply.

ISO and IEC maintain terminology databases for use in standardization at the following addresses:

— ISO Online browsing platform: available at https://www.iso.org/obp

— IEC Electropedia: available at https://www.electropedia.org/

3.1
fatigue
process of changes in properties which can occur in a metallic material due to the repeated application of stresses or strains and that can lead to cracking or failure

3.2
fatigue life
N_f
number of applied cycles to achieve a defined failure criterion

© ISO 2021 – All rights reserved

Documents
Document Sharing Hub
Full document details: BS ISO 1143:2021

3.3
***S-N* diagram**
diagram that shows the relationship between stress and *fatigue life* (3.2)

3.4
bending moment
M
multiplication between force and length of lever arm at test temperature

3.5
section modulus
W
ratio of the moment of inertia of the cross-section of a beam undergoing flexure to the greatest distance of an element of the beam from the neutral axis

3.6
machine lever ratio
M_{lr}
ratio between the force applied to the weight hanger and the *bending moment* (3.4) applied to the specimen

3.7
length of lever arm
L
distance between the supporting point and the loading point

Note 1 to entry: See Figures 1 to 7.

Note 2 to entry: Since these distances are length of level arm, $L_1 = L_2 = L$.

4 Symbols

Symbols and corresponding designations are given in Table 1

Table 1 — Symbols

Symbol	Designation	Unit
D	Diameter of gripped or loaded end of specimen	mm
d	Diameter of specimen where stress is maximum	mm
L	Length of lever arm	mm
M	Bending moment	N·mm
M_{lr}	Machine lever ratio	/
N_f	Fatigue life, cycles to failure	cycle
r	Radius at ends of test section that starts transition from test diameter, d	mm
W	Section modulus	mm^3

5 Principle of test

Nominally identical specimens are used, each being rotated and subjected to a constant bending moment. The forces giving rise to the bending moment do not rotate. The specimen may be mounted as a cantilever, with single-point or two-point loading, or as a beam, with four-point loading. The test is continued until the specimen fails or until a pre-determined number of stress cycles have been achieved, a stress cycle corresponds to a complete rotation of the specimen.

© ISO 2021 – All rights reserved
Documents
Document Sharing Hub
Full document details: BS ISO 1143:2021

6 Shape and size of specimen

6.1 Forms of the test section

The test section may be

a) cylindrical, with tangentially blending fillets at one or both ends (see Figures 1, 4 and 5),

b) tapered (see Figure 2), or

c) hourglass-type (see Figures 3, 6 and 7).

NOTE A volume of material is tested in the gauge portion of a parallel specimen in two-point and four-point loading conditions. This volume is equally under maximum stress. For all other loading conditions and for both parallel and hourglass specimens, only a thin planar element of material is submitted to the maximum stress at the minimum cross-section.

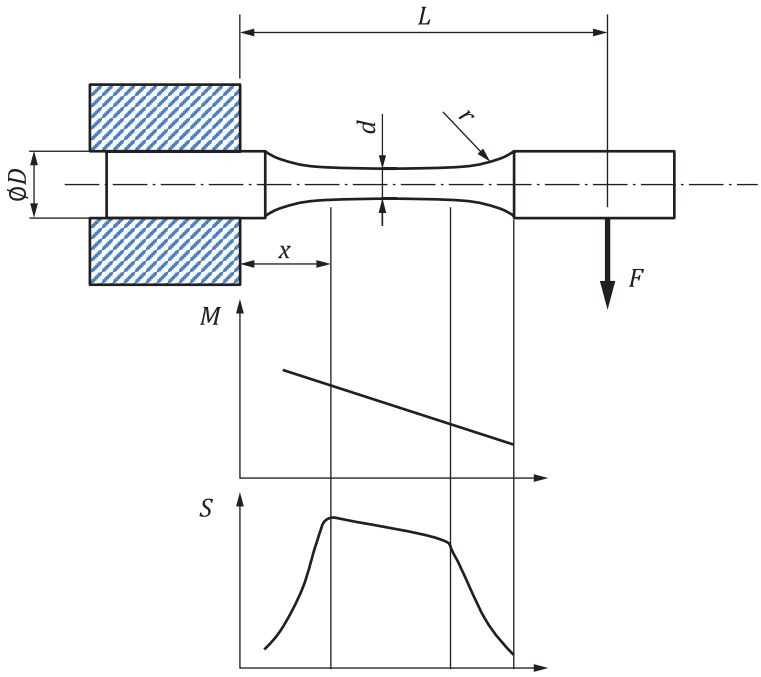

Key

D	diameter of gripped or loaded end of specimen	*M*	bending moment
d	diameter of specimen where stress is maximum	*r*	radius (see Table 1)
F	applied force	*S*	stress
L	length of lever arm	*x*	distance along specimen axis from fixed bearing face to maximum stress plane

Figure 1 — Parallel specimen — Single-point loading

© ISO 2021 – All rights reserved

Documents
Document Sharing Hub
Full document details: BS ISO 1143:2021

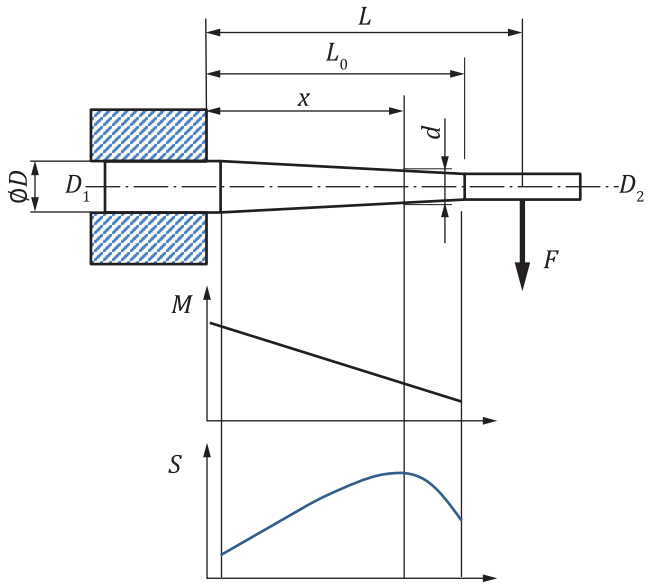

Key

D	diameter of gripped or loaded end of specimen	*M*	bending moment
d	diameter of specimen where stress is maximum	*S*	stress
F	applied force	*x*	distance along specimen axis from fixed bearing face to maximum stress plane
L	length of lever arm		

Figure 2 — Tapered specimen — Single-point loading

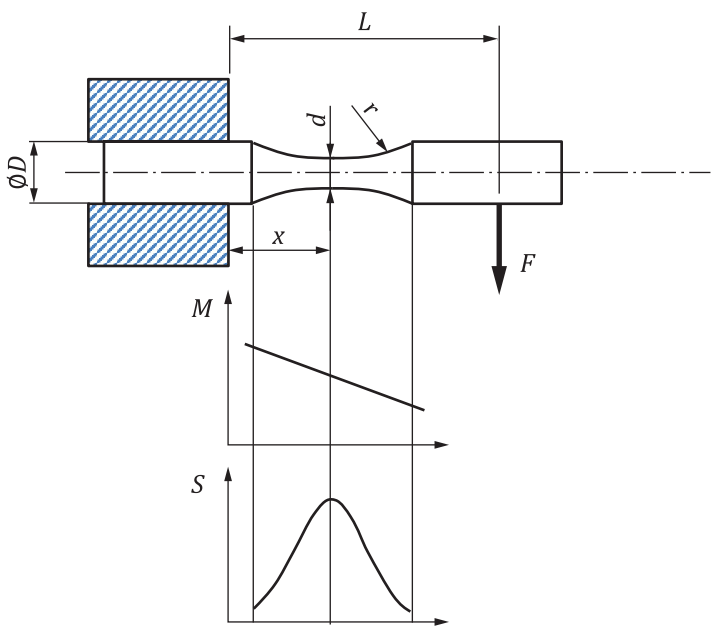

Key

D	diameter of gripped or loaded end of specimen	*M*	bending moment
d	diameter of specimen where stress is maximum	*S*	stress
F	applied force	*x*	distance along specimen axis from fixed bearing face to maximum stress plane
L	length of lever arm		
r	radius (see Table 1)		

Figure 3 — Hourglass specimen — Single-point loading

© ISO 2021 – All rights reserved
Documents
Document Sharing Hub
Full document details: BS ISO 1143:2021

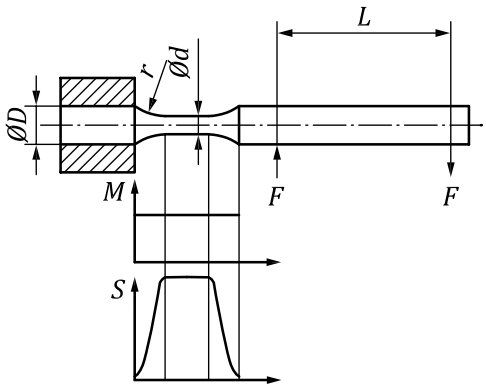

Key

D	diameter of gripped or loaded end of specimen	*M*	bending moment
d	diameter of specimen where stress is maximum	*S*	stress
F	applied force	*r*	radius (see Table 1)
L	length of lever arm		

Figure 4 — Parallel specimen — Two-point loading

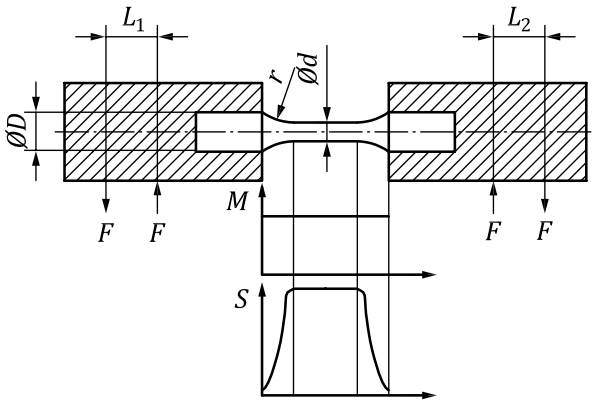

Key

D	diameter of gripped or loaded end of specimen	*M*	bending moment
d	diameter of specimen where stress is maximum	*S*	stress
F	applied force	*r*	radius (see Table 1)
L_1, L_2	length of lever arm		

NOTE $L_1 = L_2 = L$

Figure 5 — Parallel specimen — Four-point loading

© ISO 2021 – All rights reserved

Documents
Document Sharing Hub
Full document details: BS ISO 1143:2021