BS ISO 11443:2021

BSI Standards Publication

Plastics — Determination of the fluidity of plastics using capillary and slit-die rheometers

Documents
Document Sharing Hub

Full document details: BS ISO 11443:2021

National foreword

This British Standard is the UK implementation of ISO 11443:2021. It supersedes BS ISO 11443:2014, which is withdrawn.

The UK participation in its preparation was entrusted to Technical Committee PRI/21, Testing of plastics.

A list of organizations represented on this committee can be obtained on request to its committee manager.

Contractual and legal considerations

This publication has been prepared in good faith, however no representation, warranty, assurance or undertaking (express or implied) is or will be made, and no responsibility or liability is or will be accepted by BSI in relation to the adequacy, accuracy, completeness or reasonableness of this publication. All and any such responsibility and liability is expressly disclaimed to the full extent permitted by the law.

This publication is provided as is, and is to be used at the recipient's own risk.

The recipient is advised to consider seeking professional guidance with respect to its use of this publication.

This publication is not intended to constitute a contract. Users are responsible for its correct application.

© The British Standards Institution 2021
Published by BSI Standards Limited 2021

ISBN 978 0 539 12198 8

ICS 83.080.01

Compliance with a British Standard cannot confer immunity from legal obligations.

This British Standard was published under the authority of the Standards Policy and Strategy Committee on 30 April 2021.

Amendments/corrigenda issued since publication

Date	Text affected

Documents
Document Sharing Hub

Full document details: BS ISO 11443:2021

INTERNATIONAL STANDARD

ISO 11443

Fourth edition
2021-02

Plastics — Determination of the fluidity of plastics using capillary and slit-die rheometers

Plastiques — Détermination de la fluidité au moyen de rhéomètres équipés d'une filière capillaire ou plate

Reference number
ISO 11443:2021(E)

Documents
Document Sharing Hub

© ISO 2021

Full document details: BS ISO 11443:2021

COPYRIGHT PROTECTED DOCUMENT

© ISO 2021

All rights reserved. Unless otherwise specified, or required in the context of its implementation, no part of this publication may be reproduced or utilized otherwise in any form or by any means, electronic or mechanical, including photocopying, or posting on the internet or an intranet, without prior written permission. Permission can be requested from either ISO at the address below or ISO's member body in the country of the requester.

ISO copyright office
CP 401 • Ch. de Blandonnet 8
CH-1214 Vernier, Geneva
Phone: +41 22 749 01 11
Email: copyright@iso.org
Website: www.iso.org

Published in Switzerland

© ISO 2021 – All rights reserved

Documents
Document Sharing Hub

Full document details: BS ISO 11443:2021

Contents

Page

Foreword ... **v**

1 Scope ... **1**

2 Normative references ... **1**

3 Terms and definitions ... **1**

4 General principles ... **4**

5 Apparatus ... **4**
5.1 Test device ... 4
5.1.1 General ... 4
5.1.2 Rheometer barrel ... 5
5.1.3 Capillary dies (method A) ... 5
5.1.4 Slit dies (method B) ... 9
5.1.5 Piston ... 9
5.2 Temperature control ... 9
5.3 Measurement of temperature and calibration ... 10
5.3.1 Test temperature ... 10
5.3.2 Measurement of test temperature ... 10
5.3.3 Temperature calibration ... 10
5.4 Measurement of pressure and calibration ... 10
5.4.1 Test pressure ... 10
5.4.2 Pressure drop along the length of the slit die ... 11
5.4.3 Calibration ... 11
5.5 Measurement of the volume flow rate of the sample ... 11

6 Sampling ... **11**

7 Procedure ... **11**
7.1 Cleaning the test device ... 11
7.2 Selection of test temperatures ... 12
7.3 Preparation of samples ... 13
7.4 Preheating ... 13
7.5 Determination of the maximum permissible test duration ... 13
7.6 Determination of test pressure at constant volume flow rate: Method 2 ... 14
7.7 Determination of volume flow rate at constant test pressure: Method 1 ... 14
7.8 Waiting periods during measurement ... 14
7.9 Measurement of extrudate swelling ... 14
7.9.1 General ... 14
7.9.2 Measurement at room temperature ... 15
7.9.3 Measurement at the test temperature ... 15

8 Expression of results ... **15**
8.1 Volume flow rate ... 15
8.2 Apparent shear rate ... 16
8.2.1 General ... 16
8.2.2 Method A: Capillary dies ... 16
8.2.3 Method B: Slit dies ... 16
8.3 Apparent shear stress ... 17
8.3.1 General ... 17
8.3.2 Method A: Capillary dies ... 17
8.3.3 Method B: Slit dies ... 17
8.4 True shear stress ... 17
8.4.1 General ... 17
8.4.2 Bagley correction for capillary dies (method A) ... 18
8.4.3 Bagley correction for slit dies (method B) ... 21
8.4.4 Direct determination using slit dies (method B) ... 22
8.5 True shear rate ... 23

© ISO 2021 – All rights reserved

AVA Documents
Document Sharing Hub
Full document details: BS ISO 11443:2021

8.5.1 General 22
8.5.2 Method A: Capillary dies 23
8.5.3 Method B: Slit dies 23
8.6 Viscosity 23
8.7 Determination of extrudate swelling 23
8.7.1 Measurement at room temperature 23
8.7.2 Measurement at the test temperature 24

9 Precision 24

10 Test report 25
10.1 General 25
10.2 Test conditions 25
10.3 Flow characteristics 26
10.3.1 General 26
10.3.2 Graphical representation 26
10.3.3 Individual values 27
10.4 Visual examination 27

Annex A (informative) **Method of correcting for the influence of H/B on the apparent shear rate 28**

Annex B (informative) **Measurement errors 30**

Annex C (informative) **Uncertainties in the determination of shear viscosity by capillary extrusion rheometry testing 31**

Bibliography 36

© ISO 2021 – All rights reserved

Documents
Document Sharing Hub
Full document details: BS ISO 11443:2021

Foreword

ISO (the International Organization for Standardization) is a worldwide federation of national standards bodies (ISO member bodies). The work of preparing International Standards is normally carried out through ISO technical committees. Each member body interested in a subject for which a technical committee has been established has the right to be represented on that committee. International organizations, governmental and non-governmental, in liaison with ISO, also take part in the work. ISO collaborates closely with the International Electrotechnical Commission (IEC) on all matters of electrotechnical standardization.

The procedures used to develop this document and those intended for its further maintenance are described in the ISO/IEC Directives, Part 1. In particular, the different approval criteria needed for the different types of ISO documents should be noted. This document was drafted in accordance with the editorial rules of the ISO/IEC Directives, Part 2 (see www.iso.org/directives).

Attention is drawn to the possibility that some of the elements of this document may be the subject of patent rights. ISO shall not be held responsible for identifying any or all such patent rights. Details of any patent rights identified during the development of the document will be in the Introduction and/or on the ISO list of patent declarations received (see www.iso.org/patents).

Any trade name used in this document is information given for the convenience of users and does not constitute an endorsement.

For an explanation of the voluntary nature of standards, the meaning of ISO specific terms and expressions related to conformity assessment, as well as information about ISO's adherence to the World Trade Organization (WTO) principles in the Technical Barriers to Trade (TBT), see www.iso.org/iso/foreword.html.

This document was prepared by Technical Committee ISO/TC 61, *Plastics*, Subcommittee SC 5, *Physical-chemical properties*.

This fourth edition cancels and replaces the third edition (ISO 11443:2014), which has been technically revised.

The main changes compared to the previous edition are as follows:

— the use of a zero length die has been added.

Any feedback or questions on this document should be directed to the user's national standards body. A complete listing of these bodies can be found at www.iso.org/members.html.

© ISO 2021 – All rights reserved

Documents
Document Sharing Hub
Full document details: BS ISO 11443:2021

Documents
Document Sharing Hub

Plastics — Determination of the fluidity of plastics using capillary and slit-die rheometers

1 Scope

This document specifies methods for determining the fluidity of plastics melts subjected to shear stresses at rates and temperatures approximating to those arising in plastics processing. Testing plastics melts in accordance with these methods is of great importance since the fluidity of plastics melts is generally not dependent solely on temperature, but also on other parameters; in particular shear rate and shear stress.

The methods described in this document are useful for determining melt viscosities from 10 Pa·s to 10^7 Pa·s, depending on the measurement range of the pressure and/or force transducer and the mechanical and physical characteristics of the rheometer. The shear rates occurring in extrusion rheometers range from 1 s^{-1} to 10^6 s^{-1}.

Elongational effects at the die entrance cause extrudate swelling at the die exit. Methods for assessing extrudate swelling have also been included.

The rheological techniques described are not limited to the characterization of wall-adhering thermoplastics melts only; for example, thermoplastics exhibiting "slip" effects[1][2] and thermosetting plastics can be included. However, the methods used for determining the shear rate and shear viscosity are invalid for materials which are not wall-adhering. Nevertheless, this document can be used to characterize the rheological behaviour of such fluids for a given geometry.

2 Normative references

The following documents are referred to in the text in such a way that some or all of their content constitutes requirements of this document. For dated references, only the edition cited applies. For undated references, the latest edition of the referenced document (including any amendments) applies.

ISO 1133-1, *Plastics — Determination of the melt mass-flow rate (MFR) and melt volume-flow rate (MVR) of thermoplastics — Part 1: Standard method*

ISO 1133-2, *Plastics — Determination of the melt mass-flow rate (MFR) and melt volume-flow rate (MVR) of thermoplastics — Part 2: Method for materials sensitive to time-temperature history and/or moisture*

ISO 4287, *Geometrical Product Specifications (GPS) — Surface texture: Profile method — Terms, definitions and surface texture parameters*

ISO 6507-1, *Metallic materials — Vickers hardness test — Part 1: Test method*

ISO 11403-2, *Plastics — Acquisition and presentation of comparable multipoint data — Part 2: Thermal and processing properties*

3 Terms and definitions

For the purposes of this document, the following terms and definitions apply.

ISO and IEC maintain terminological databases for use in standardization at the following addresses:

— ISO Online browsing platform: available at https://www.iso.org/obp

— IEC Electropedia: available at http://www.electropedia.org/

© ISO 2021 – All rights reserved

Documents
Document Sharing Hub
Full document details: BS ISO 11443:2021

3.1
Newtonian fluid
fluid for which the viscosity is independent of the shear rate and of time

3.2
non-Newtonian fluid
fluid for which the viscosity varies with the shear rate and/or with time

Note 1 to entry: For the purposes of this document, this definition refers to fluids for which the viscosity varies only with the shear rate.

3.3
apparent shear stress
τ_{ap}
fictive shear stress to which the melt in contact with the die wall is subjected, expressed in pascals (Pa)

Note 1 to entry: It is calculated as the product of test pressure and the ratio of die cross-sectional area to die wall area.

3.4
apparent shear rate
$\dot{\gamma}_{ap}$
fictive shear rate that the melt at the wall would experience at the observed volume flow rate if its behaviour were Newtonian, expressed in reciprocal seconds (s^{-1})

3.5
true shear stress
τ
actual shear stress to which the melt in contact with the die wall is subjected, expressed in pascals (Pa)

Note 1 to entry: It is estimated from the test pressure p by applying corrections for entrance and exit pressure losses, or is directly determined from the melt-pressure gradient in the channel.

Note 2 to entry: For the purposes of notation, the absence of a subscript is used to denote true values.

3.6
true shear rate
$\dot{\gamma}$
shear rate obtained from the *apparent shear rate* $\dot{\gamma}_{ap}$ (3.4) by taking into account the deviations from Newtonian behaviour by appropriate correction algorithms (see Note in 8.2.2), expressed in reciprocal seconds (s^{-1})

Note 1 to entry: For the purposes of notation, the absence of a subscript is used to denote true values.

3.7
viscosity
η
viscosity in steady shear, defined as the ratio $\tau/\dot{\gamma}$ of *true shear stress* τ (3.5) to *true shear rate* $\dot{\gamma}$ (3.6), expressed in pascal seconds (Pa·s)

3.8
apparent viscosity
η_{ap}
ratio $\tau_{ap}/\dot{\gamma}_{ap}$ of apparent shear stress τ_{ap} to *apparent shear rate* $\dot{\gamma}_{ap}$ (3.4), expressed in pascal seconds (Pa·s)

3.9
Bagley corrected apparent viscosity
η_{apB}
ratio $\tau/\dot{\gamma}_{ap}$ of true shear stress τ (3.5) to *apparent shear rate* $\dot{\gamma}_{ap}$ (3.4), expressed in pascal seconds (Pa·s)

© ISO 2021 – All rights reserved
AVA Documents Document Sharing Hub
Full document details: BS ISO 11443:2021

3.10
Rabinowitsch corrected apparent viscosity
η_{apR}
ratio $\tau_{ap}/\dot{\gamma}$ of *apparent shear stress* τ_{ap} to *true shear rate* $\dot{\gamma}$ (3.6), expressed in pascal seconds (Pa·s)

Note 1 to entry: This term is appropriate for use when testing with a single die of large length-to-diameter aspect ratio for which entrance effects are negligible.

3.11
volume flow rate
Q
volume of melt flowing through the die per unit time, expressed in cubic millimetres per second (mm^3/s)

3.12
swell ratio at room temperature
S_a
ratio of the diameter of the extrudate to the diameter of the capillary die, both measured at room temperature

3.13
swell ratio at the test temperature
S_T
ratio of the diameter of the extrudate to the diameter of the capillary die, both measured at the test temperature

3.14
percent swell at room temperature
s_a
difference between the diameter of the extruded strand and the diameter of the capillary die, expressed as a percentage of the diameter of the capillary die, both measured at room temperature

3.15
percent swell at the test temperature
s_T
difference between the diameter of the extruded strand and the diameter of the capillary die, expressed as a percentage of the diameter of the capillary die, both measured at the test temperature

Note 1 to entry: Equivalent slit-die extrudate swell terms can be derived based on the thickness of slit-die extrudate with reference to the slit-die thickness.

3.16
preheating time
time interval between completion of charging of the barrel and the beginning of measurement

3.17
dwell time
time interval between the completion of charging of the barrel and the end of measurements

Note 1 to entry: In certain special cases, it can be necessary to note the dwell time at the end of each measurement where more than one measurement per barrel filling is made.

3.18
extrusion time
time corresponding to the period of measurement for a given shear rate

3.19
critical shear stress
value of the shear stresses at the die wall at which any of the following occur:

— a discontinuity in the curve plotting shear stress against flow rate or shear rate;

— roughness (or waving) of the extrudate as it leaves the die

© ISO 2021 – All rights reserved

Documents
Document Sharing Hub
Full document details: BS ISO 11443:2021

Note 1 to entry: It is expressed in pascals (Pa).

3.20
critical shear rate
shear rate corresponding to the *critical shear stress* (3.19), expressed in reciprocal seconds (s^{-1})

3.21
zero length die
special designed die for an easy, quick and accurate entrance pressure loss correction by Bagley correction, because only measurements with two different die lengths are necessary

4 General principles

The plastics melt is forced through a capillary or slit die of known dimensions. Two principal methods can be used:

a) Method 1: for a specified constant test pressure p, the volume flow rate Q is measured, or

b) Method 2: for a specified constant volume flow rate Q, the test pressure p is measured.

These methods can be used with capillary dies (method A) and slit dies (method B). For full designation of the test method options, see Table 1.

Table 1 — Designation of test methods

Die cross section	Preset parameter	
	Test pressure, p	**Volume flow rate**, Q
Circular (capillary die)	A1	A2
Rectangular (slit die)	B1	B2

Measurements can be made using a range of values of the preset parameter (either applied test pressure in method 1, or volume flow rate in method 2).

If a slit die with pressure transducers positioned along its length and also upstream of the die entry is used, then entrance and exit pressure drop values can be determined. If capillary dies of the same radius but of varying lengths are used, then the sum of the entrance and exit pressure drops can be determined.

A slit die with pressure transducers positioned along its length is particularly suited for automated measurements using online computer evaluation.

Recommended values for capillary die dimensions and for flow rates and temperatures to be used in testing are presented either in the relevant clauses below or in ISO 11403-2.

In using a slit die, either the aspect ratio H/B between the thickness H and the width B of the slit is small or else a correction for H/B (see Annex A) is necessary. In the latter case, the calculated quantities are dependent on assumptions made in deriving the correction formulae used, notably that elastic effects are irrelevant.

5 Apparatus

5.1 Test device

5.1.1 General

The test device shall consist of a heatable barrel, the bore of which is closed at the bottom end by an interchangeable capillary or slit die. The test pressure shall be exerted on the melt contained in this

© ISO 2021 – All rights reserved
Documents
Document Sharing Hub
Full document details: BS ISO 11443:2021

barrel by a piston, screw, or by the use of gas pressure. Figure 1 and Figure 2 show typical examples. Other dimensions are permitted.

5.1.2 Rheometer barrel

The barrel shall consist of a material resistant to wear and corrosion up to the maximum temperature of the heating system.

The barrel can have a lateral bore for the insertion of a melt-pressure transducer close to the die entrance.

The permissible deviations in the mean bore diameter throughout the length of the barrel shall be less than ±0,007 mm.

The barrel shall be manufactured using techniques and materials that produce a Vickers hardness preferably of at least 800 HV 30 (according to ISO 6507-1 and Note 1) and a surface roughness of less than R_a = 0,25 µm (average arithmetic discrepancy, according to ISO 4287).

NOTE 1 For temperatures up to 400 °C, nitrided steel has been found suitable. Materials of hardness values lower than that specified but of sufficient corrosion and abrasion resistance have been found to be acceptable for construction of the barrel and dies.

NOTE 2 An increase in barrel-bore diameter increases the number of measurements that can be made with a single barrel filling and increases the shear rate range of the instrument. Disadvantages of using a larger barrel-bore diameter are that larger sample masses are required and that the time necessary to reach temperature equilibrium throughout the sample is greater. The barrel-bore diameters of commercially available rheometers lie in the range between 6,35 mm and 30 mm.

5.1.3 Capillary dies (method A)

5.1.3.1 The entire length of the capillary die wall shall be machined to an accuracy of ±0,007 mm for the diameter (D) and ±0,025 mm for the length (L) (see Figure 1).

The capillary shall be manufactured using techniques and materials that produce a Vickers hardness preferably of at least 800 HV 30 (according to ISO 6507-1 and Note 1 in 5.1.2) and a surface roughness of less than R_a = 0,25 µm (average arithmetic discrepancy, according to ISO 4287).

The capillary opening shall show no visible machining marks or perceptible eccentricity.

NOTE 1 Diameters of capillary dies typically used lie in the range between 0,5 mm and 2 mm, with various lengths to obtain the desired L/D ratios. For testing of filled materials, larger diameters can be required.

NOTE 2 Hardened steel, tungsten carbide, stellite, and hardened stainless steel are the most common die materials.

NOTE 3 The precision with which capillary dimensions can be measured is dependent upon both the capillary radius and the capillary length. With capillaries of diameter smaller than 1,25 mm, the specified precision (±0,007 mm) is difficult to obtain. Due to the extreme sensitivity of flow data to capillary dimensions, it is important that the capillary dimensions, and the precision with which the dimensions are measured, are known and reported. This also applies to the dimensions (thickness, width, and length) of slit dies (see 5.1.4).

© ISO 2021 – All rights reserved

Documents
Document Sharing Hub
Full document details: BS ISO 11443:2021

Dimensions in millimetres

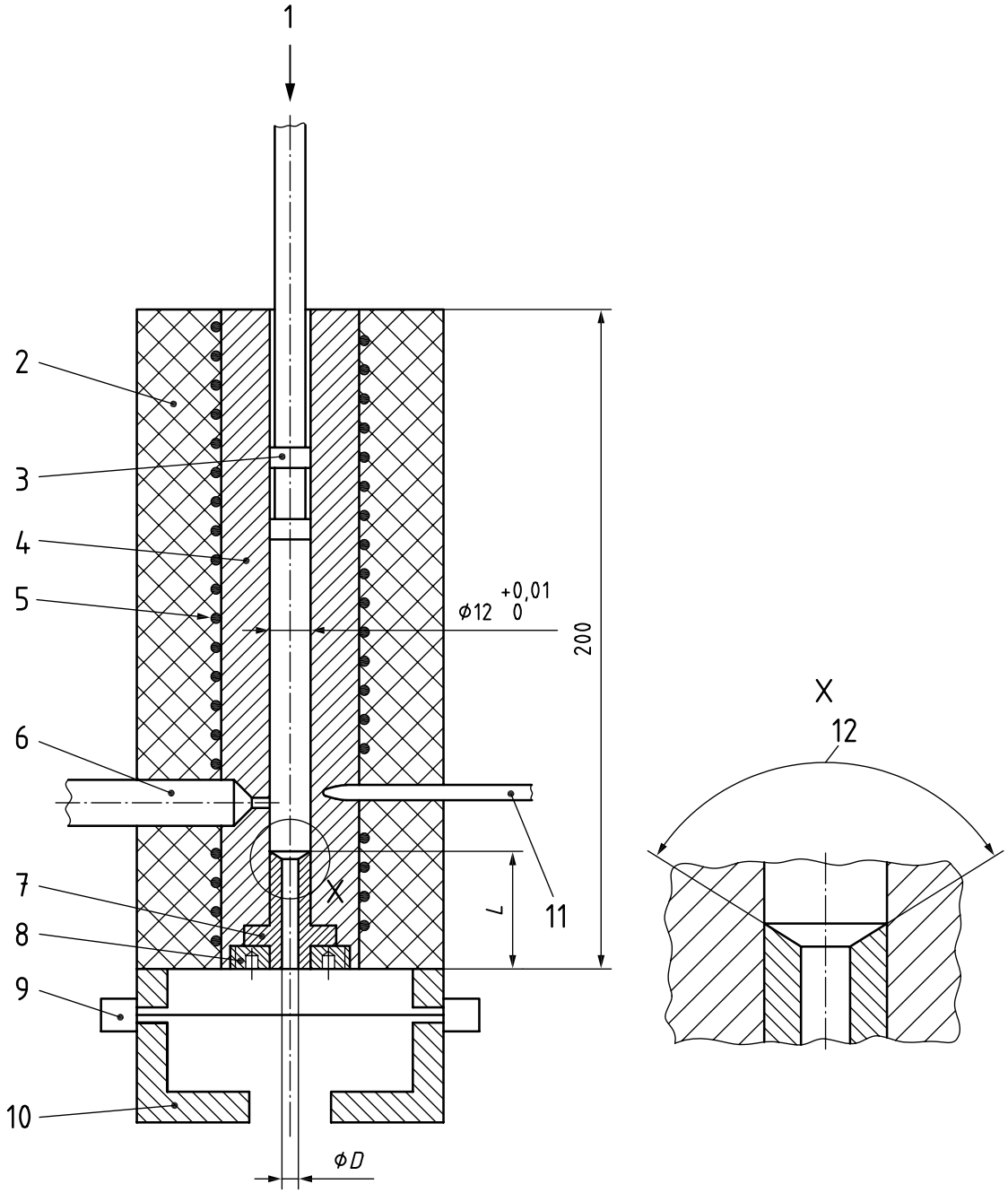

Key

1 applied force or constant velocity
2 thermal insulation
3 piston
4 barrel
5 heating coil
6 pressure transducer
7 capillary die
8 die-retaining nut
9 optical sensor
10 temperature-controlled air chamber
11 thermometer
12 inlet angle

Figure 1 — Typical example of an extrusion rheometer used with a capillary die

© ISO 2021 – All rights reserved
Documents
Document Sharing Hub
Full document details: BS ISO 11443:2021