BS ISO 11451-2:2015

BSI Standards Publication

Road vehicles — Vehicle test methods for electrical disturbances from narrowband radiated electromagnetic energy

Part 2: Off-vehicle radiation sources

bsi.

...making excellence a habit.™

AVA Document Sharing Hub

Full document details: BS ISO 11451-2:2015

National foreword

This British Standard is the UK implementation of ISO 11451-2:2015.

The UK participation in its preparation was entrusted to Technical Committee AUE/16, Data Communication (Road Vehicles).

A list of organizations represented on this committee can be obtained on request to its secretary.

This publication does not purport to include all the necessary provisions of a contract. Users are responsible for its correct application.

© The British Standards Institution 2015. Published by BSI Standards Limited 2015

ISBN 978 0 580 78595 5

ICS 33.100.20; 43.040.10

Compliance with a British Standard cannot confer immunity from legal obligations.

This British Standard was published under the authority of the Standards Policy and Strategy Committee on 30 June 2015.

Amendments issued since publication

Date	Text affected

Documents
Document Sharing Hub

Full document details: BS ISO 11451-2:2015

INTERNATIONAL STANDARD

ISO 11451-2

Fourth edition
2015-06-01

Road vehicles — Vehicle test methods for electrical disturbances from narrowband radiated electromagnetic energy —

Part 2: Off-vehicle radiation sources

Véhicules routiers — Méthodes d'essai d'un véhicule soumis à des perturbations électriques par rayonnement d'énergie électromagnétique en bande étroite —

Partie 2: Sources de rayonnement hors du véhicule

Reference number
ISO 11451-2:2015(E)

Documents
Document Sharing Hub

© ISO 2015

Full document details: BS ISO 11451-2:2015

COPYRIGHT PROTECTED DOCUMENT

© ISO 2015, Published in Switzerland

All rights reserved. Unless otherwise specified, no part of this publication may be reproduced or utilized otherwise in any form or by any means, electronic or mechanical, including photocopying, or posting on the internet or an intranet, without prior written permission. Permission can be requested from either ISO at the address below or ISO's member body in the country of the requester.

ISO copyright office
Ch. de Blandonnet 8 • CP 401
CH-1214 Vernier, Geneva, Switzerland
Tel. +41 22 749 01 11
Fax +41 22 749 09 47
copyright@iso.org
www.iso.org

© ISO 2015 – All rights reserved

Documents
Document Sharing Hub

Full document details: BS ISO 11451-2:2015

Contents

Page

Foreword ... **iv**

1 Scope ... **1**

2 Normative references ... **1**

3 Terms and definitions ... **1**

4 Test conditions ... **1**

5 Test location ... **2**

6 Test instrumentation ... **4**
- 6.1 Field generating device ... 4
- 6.2 Field probes ... 5
- 6.3 Stimulation and monitoring of the device under test (DUT) ... 5

7 Test set-up ... **5**
- 7.1 Vehicle placement ... 6
- 7.2 Field generating device location (relative to vehicle and shielded enclosure) ... 6
  - 7.2.1 Antenna constraints ... 6
  - 7.2.2 TLS constraints ... 6
- 7.3 Vehicle test configurations ... 6
  - 7.3.1 Vehicle not connected to the power grid ... 6
  - 7.3.2 Vehicle in charging mode connected to the power grid ... 7
  - 7.3.3 Vehicle in charging mode through wireless power transmission (WPT) ... 15

8 Test procedure ... **17**
- 8.1 Test plan ... 18
- 8.2 Test method ... 18
  - 8.2.1 Field calibration ... 18
- 8.3 Test report ... 24

Annex A (informative) **Function performance status classification** ... **25**

© ISO 2015 – All rights reserved

Documents
Document Sharing Hub
Full document details: BS ISO 11451-2:2015

Foreword

ISO (the International Organization for Standardization) is a worldwide federation of national standards bodies (ISO member bodies). The work of preparing International Standards is normally carried out through ISO technical committees. Each member body interested in a subject for which a technical committee has been established has the right to be represented on that committee. International organizations, governmental and non-governmental, in liaison with ISO, also take part in the work. ISO collaborates closely with the International Electrotechnical Commission (IEC) on all matters of electrotechnical standardization.

The procedures used to develop this document and those intended for its further maintenance are described in the ISO/IEC Directives, Part 1. In particular the different approval criteria needed for the different types of ISO documents should be noted. This document was drafted in accordance with the editorial rules of the ISO/IEC Directives, Part 2 (see www.iso.org/directives).

Attention is drawn to the possibility that some of the elements of this document may be the subject of patent rights. ISO shall not be held responsible for identifying any or all such patent rights. Details of any patent rights identified during the development of the document will be in the Introduction and/or on the ISO list of patent declarations received (see www.iso.org/patents).

Any trade name used in this document is information given for the convenience of users and does not constitute an endorsement.

For an explanation on the meaning of ISO specific terms and expressions related to conformity assessment, as well as information about ISO's adherence to the WTO principles in the Technical Barriers to Trade (TBT) see the following URL: Foreword - Supplementary information

The committee responsible for this document is ISO/TC 22, *Road vehicles*, Subcommittee SC 32, *Electrical and electronic components and general system aspects*.

Annex A of this part of ISO 11451 is for information only.

This fourth edition cancels and replaces the third edition (ISO 11451-2:2005) which has been technically revised.

ISO 11451 consists of the following parts, under the general title *Road vehicles — Vehicle test methods for electrical disturbances from narrowband radiated electromagnetic energy*:

— *Part 1: General principles and terminology*

— *Part 2: Off-vehicle radiation sources*

— *Part 3: On-board transmitter simulation*

— *Part 4: Bulk current injection (BCI)*

© ISO 2015 – All rights reserved
Documents
Document Sharing Hub
Full document details: BS ISO 11451-2:2015

INTERNATIONAL STANDARD ISO 11451-2:2015(E)

Road vehicles — Vehicle test methods for electrical disturbances from narrowband radiated electromagnetic energy —

Part 2: Off-vehicle radiation sources

1 Scope

This part of ISO 11451 specifies a method for testing the immunity of passenger cars and commercial vehicles to electrical disturbances from off-vehicle radiation sources, regardless of the vehicle propulsion system (e.g. spark ignition engine, diesel engine, electric motor).

The electromagnetic disturbances considered are limited to narrowband electromagnetic fields.

While this standard refers specifically to passenger cars and commercial vehicles, generalized as "vehicle(s)", it can readily be applied to other types of vehicles.

ISO 11451-1 specifies general test conditions, definitions, practical use, and basic principles of the test procedure.

Function performance status classification guidelines for immunity to electromagnetic radiation from an off-vehicle radiation source are given in Annex A.

2 Normative references

The following documents, in whole or in part, are normatively referenced in this document and are indispensable for its application. For dated references, only the edition cited applies. For undated references, the latest edition of the referenced document (including any amendments) applies.

ISO 11451-1, *Road vehicles — Vehicle test methods for electrical disturbances from narrowband radiated electromagnetic energy — Part 1: General principles and terminology*

3 Terms and definitions

For the purposes of this document, the terms and definitions given in ISO 11451-1 apply.

4 Test conditions

The applicable frequency range of this test method is 0,01 MHz to 18 000 MHz. Testing over the full frequency range could require different field-generating devices, but this does not imply that testing of overlapping frequency ranges is required.

The user shall specify the test severity level or levels over the frequency range. Suggested test severity levels are given in Annex A of this International Standard.

Standard test conditions are given in ISO 11451-1 for the following:

— test temperature;

— supply voltage;

© ISO 2015 – All rights reserved

Documents
Document Sharing Hub
Full document details: BS ISO 11451-2:2015

— modulation;

— dwell time;

— frequency step sizes;

— definition of test severity levels;

— test signal quality.

5 Test location

The test should be performed in an absorber-lined shielded enclosure.

The aim of using an absorber-lined shielded enclosure is to create an indoor electromagnetic compatibility testing facility that simulates open field testing.

The size, shape, and construction of the enclosure can vary considerably. Typically, the floor is not covered with absorbing material, but such covering is allowed. Measurements in enclosures with or without floor absorbers can lead to different results. The minimum size of the shielded enclosure is determined by the size of the test region needed, the size of the field generation device or devices, the needed clearances between these and the largest vehicle to be tested, and the characteristics of the absorbing material. To create the test region, the absorber, field generation system and enclosure shape are selected such that the amount of extraneous energy in the test region is reduced to below a minimum value that will give the desired measurement accuracy. The design objective is to reduce the reflected energy in the test region to –10 dB or less over the test frequency range (not applicable to transmission line system (TLS) field generation systems). An example of a rectangular shielded enclosure is shown in Figure 1.

The test may alternatively be performed at an outdoor test site. The test facility shall comply with (national) legal requirements regarding the emission of electromagnetic fields.

© ISO 2015 – All rights reserved
Documents
Document Sharing Hub
Full document details: BS ISO 11451-2:2015

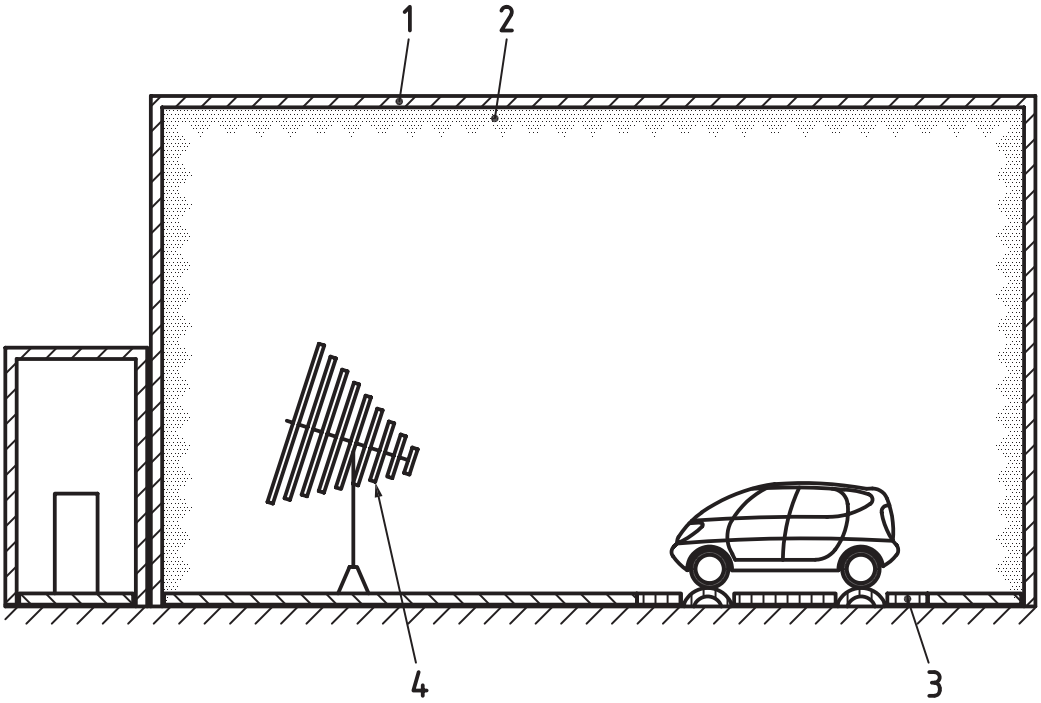

a) Side view (vertical polarization)

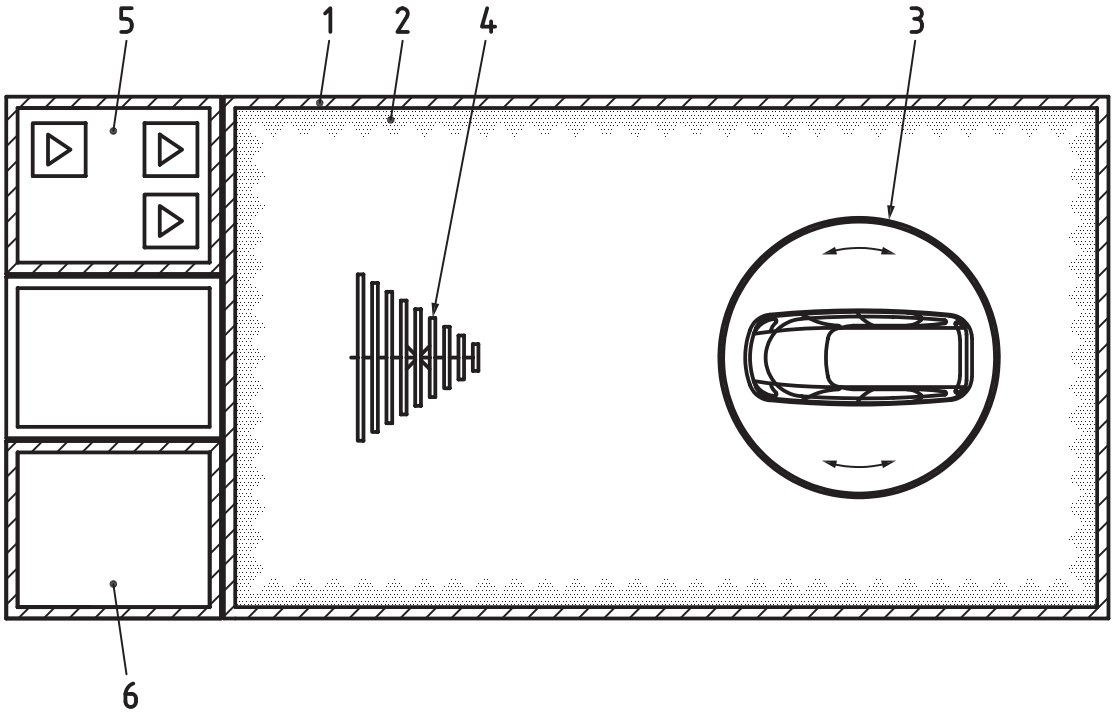

b) Top view (horizontal polarization)

Key

1	absorber-lined shielded enclosure	4	antenna
2	RF absorber material	5	amplifier room
3	vehicle dynamometer on turntable[a]	6	control room

[a] Turntable shown rotatable through ±180° with two pairs of variable wheelbase rollers to accommodate all vehicle sizes and functions.

Figure 1 — Example of absorber-lined shielded enclosure

Documents
Document Sharing Hub

© ISO 2015 – All rights reserved

Full document details: BS ISO 11451-2:2015

6 Test instrumentation

Testing consists of generating radiated electromagnetic fields using antenna sets with radio frequency (RF) sources capable of producing the desired field strength over the range of test frequencies.

The following test instrumentation is used:

— Field generating device(s): e.g. antenna(s);

— Field probe(s);

— RF signal generator with internal or external modulation capability;

— High power amplifier(s);

— Powermeter (or equivalent measuring instrument) to measure forward power and reflected power.

6.1 Field generating device

The field generating device can be an antenna or a TLS.

The construction and orientation of any field generating device shall be such that the generated field can be polarized in the mode specified in the test plan (see 8.1). An example of a parallel-plate TLS is shown in Figure 2. Multiple antennas, amplifiers and directional couplers could be necessary to cover the complete frequency range.

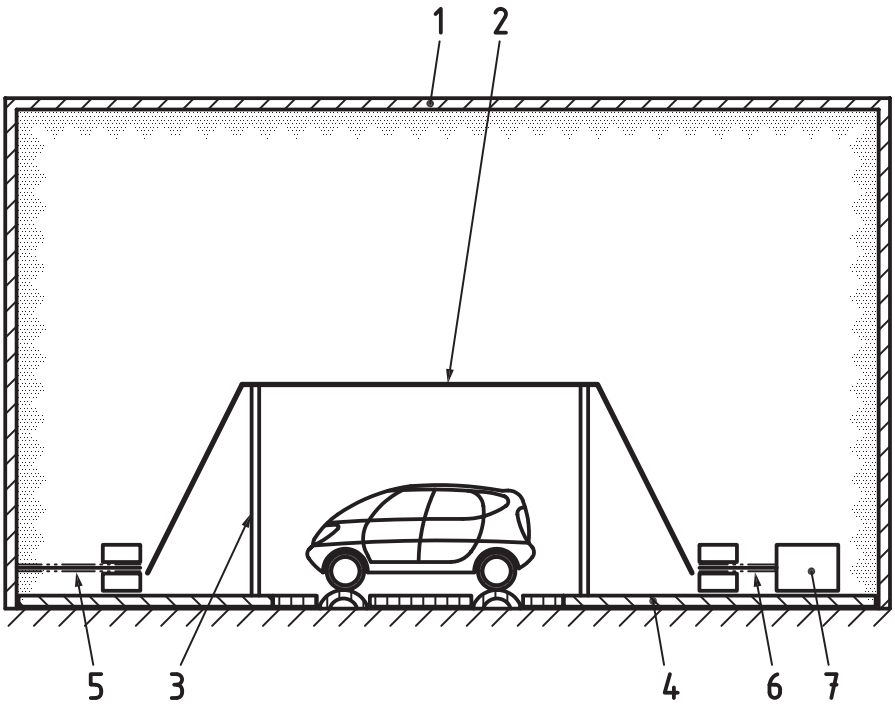

a) Side view

© ISO 2015 – All rights reserved
Documents
Document Sharing Hub
Full document details: BS ISO 11451-2:2015

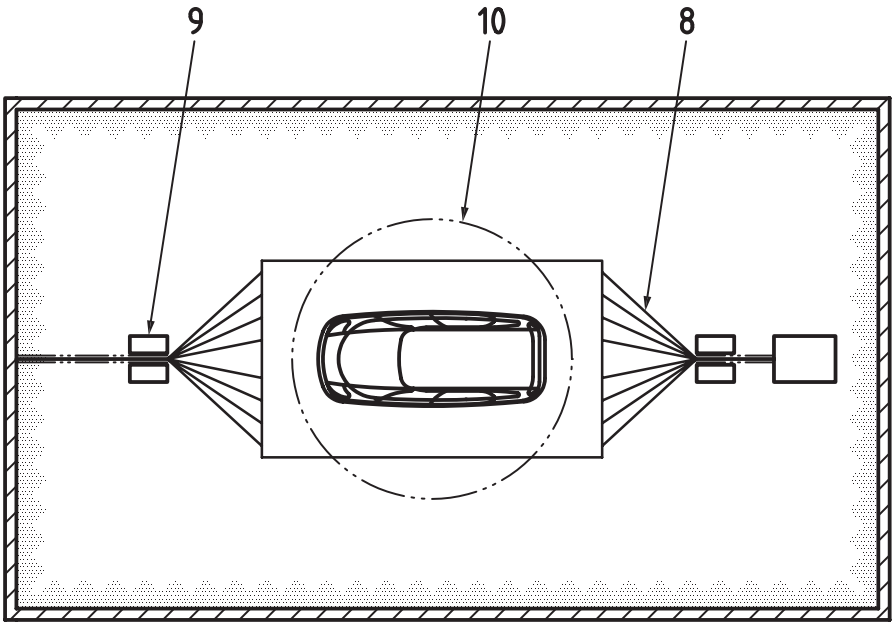

b) Top view

Key

1 shielded enclosure (absorbers permitted)
2 conductive plate or set of wires
3 non-metallic supports
4 shielded enclosure floor
5 signal source feed line (coaxial cable)
6 coaxial cable
7 load
8 conductive wires
9 signal source feed connection
10 turntable (not required for this test)

Figure 2 — Example of parallel-plate TLS

6.2 Field probes

Field probes shall be electrically small in relation to the wavelength and isotropic. The communication lines from the probes shall be fibre optic links.

6.3 Stimulation and monitoring of the device under test (DUT)

The vehicle shall be operated as required in the test plan by using actuators which have a minimum effect on the electromagnetic characteristics, e.g. plastic blocks on the push-buttons, pneumatic actuators with plastic tubes.

Connections to equipment monitoring electromagnetic interference reactions of the vehicle may be accomplished by using fibre-optics, or high resistance leads. Other type of leads can be used but require extreme care to minimize interactions. The orientation, length, and location of such leads shall be carefully documented to ensure repeatability of test results.

Any electrical connection of monitoring equipment to the vehicle can cause malfunctions of the vehicle. Extreme care shall be taken to avoid such an effect.

7 Test set-up

Three test setups are described:

— one for all types of vehicles when they are not connected to the power mains;

© ISO 2015 – All rights reserved

Documents
Document Sharing Hub
Full document details: BS ISO 11451-2:2015