BS ISO 11451-5:2023

BSI Standards Publication

Road vehicles — Vehicle test methods for electrical disturbances from narrowband radiated electromagnetic energy

Part 5: Reverberation chamber

Documents
Document Sharing Hub

Full document details: BS ISO 11451-5:2023

National foreword

This British Standard is the UK implementation of ISO 11451-5:2023.

The UK participation in its preparation was entrusted to Technical Committee AUE/32, Electrical and electronic components and general system aspects (Road vehicles).

A list of organizations represented on this committee can be obtained on request to its committee manager.

Contractual and legal considerations

This publication has been prepared in good faith, however no representation, warranty, assurance or undertaking (express or implied) is or will be made, and no responsibility or liability is or will be accepted by BSI in relation to the adequacy, accuracy, completeness or reasonableness of this publication. All and any such responsibility and liability is expressly disclaimed to the full extent permitted by the law.

This publication is provided as is, and is to be used at the recipient's own risk.

The recipient is advised to consider seeking professional guidance with respect to its use of this publication.

This publication is not intended to constitute a contract. Users are responsible for its correct application.

© The British Standards Institution 2023
Published by BSI Standards Limited 2023

ISBN 978 0 539 04275 7

ICS 19.060; 19.080; 33.100.20; 43.040.10

Compliance with a British Standard cannot confer immunity from legal obligations.

This British Standard was published under the authority of the Standards Policy and Strategy Committee on 31 May 2023.

Amendments/corrigenda issued since publication

Date	Text affected

Documents
Document Sharing Hub

Full document details: BS ISO 11451-5:2023

INTERNATIONAL STANDARD

ISO 11451-5

First edition
2023-05

Road vehicles — Vehicle test methods for electrical disturbances from narrowband radiated electromagnetic energy —

Part 5: Reverberation chamber

Véhicules routiers — Méthodes d'essai d'un véhicule soumis à des perturbations électriques par rayonnement d'énergie électromagnétique en bande étroite —

Partie 5: Chambre réverbérante

Reference number
ISO 11451-5:2023(E)

Documents
Document Sharing Hub

© ISO 2023

Full document details: BS ISO 11451-5:2023

COPYRIGHT PROTECTED DOCUMENT

© ISO 2023

All rights reserved. Unless otherwise specified, or required in the context of its implementation, no part of this publication may be reproduced or utilized otherwise in any form or by any means, electronic or mechanical, including photocopying, or posting on the internet or an intranet, without prior written permission. Permission can be requested from either ISO at the address below or ISO's member body in the country of the requester.

ISO copyright office
CP 401 • Ch. de Blandonnet 8
CH-1214 Vernier, Geneva
Phone: +41 22 749 01 11
Email: copyright@iso.org
Website: www.iso.org

Published in Switzerland

© ISO 2023 – All rights reserved

Documents
Document Sharing Hub

Full document details: BS ISO 11451-5:2023

Contents

Page

Foreword ... **v**

1 Scope ... **1**

2 Normative references ... **1**

3 Terms and definitions ... **1**

4 Test conditions ... **6**

5 Test location ... **6**
5.1 Reverberation chamber description ... 6
5.2 Working volume ... 7

6 Test instrumentation ... **7**
6.1 General ... 7
6.2 Field generating device ... 8
6.3 Field probes ... 8
6.4 Stimulation and monitoring of the device under test (DUT) ... 8
6.5 Optional: receiving antenna(s) and spectrum analyser ... 8
6.6 Optional: vector network analyser ... 9

7 Test set-up ... **9**
7.1 Vehicle placement ... 10
7.2 Field generating device location – Antenna constraints ... 10
7.3 Vehicle test configurations ... 10
7.3.1 Vehicle not connected to the power grid ... 10
7.3.2 Vehicle in charging mode 1 or mode 2 (AC powered, without communication) ... 10
7.3.3 Vehicle in charging mode 3 or mode 4 (AC or DC powered, with communication) ... 13
7.3.4 Vehicle in charging mode through wireless power transmission (WPT) ... 17

8 Test procedure ... **19**
8.1 General ... 19
8.2 Stirring configurations ... 20
8.3 Test plan ... 20
8.4 Test methods ... 20
8.5 Reverb method with substitution method power control ... 23
8.5.1 Reverb reference points ... 23
8.5.2 Substitution method with empty chamber calibration ... 25
8.5.3 Substitution method with calibration including the vehicle ... 29
8.6 Test report ... 31

Annex A (informative) **Function performance status classification** ... **32**

Annex B (normative) **Test level definition** ... **33**

Annex C (normative) **Reverberation chamber characteristics** ... **36**

Annex D (informative) **Tuned mode and stirred mode** ... **44**

Annex E (informative) **TLS method** ... **48**

Annex F (informative) **Cavity mode method** ... **55**

Annex G (informative) **Reverb method with closed-loop power control** ... **59**

Annex H (informative) **Chamber time constant method** ... **61**

Annex I (informative) **VNA method** ... **67**

Annex J (informative) **Measurement of total antenna efficiency η** ... **74**

Annex K (informative) **Measurement of diffuse field correction factor F_{df}** ... **77**

© ISO 2023 – All rights reserved

AVA Documents
Document Sharing Hub
Full document details: BS ISO 11451-5:2023

Annex L (informative) **Measurement of τ, Q, and ACS** **80**
Annex M (normative) **Additional AAN(s)** **85**
Bibliography **86**

© ISO 2023 – All rights reserved
Documents
Document Sharing Hub
Full document details: BS ISO 11451-5:2023

Foreword

ISO (the International Organization for Standardization) is a worldwide federation of national standards bodies (ISO member bodies). The work of preparing International Standards is normally carried out through ISO technical committees. Each member body interested in a subject for which a technical committee has been established has the right to be represented on that committee. International organizations, governmental and non-governmental, in liaison with ISO, also take part in the work. ISO collaborates closely with the International Electrotechnical Commission (IEC) on all matters of electrotechnical standardization.

The procedures used to develop this document and those intended for its further maintenance are described in the ISO/IEC Directives, Part 1. In particular, the different approval criteria needed for the different types of ISO documents should be noted. This document was drafted in accordance with the editorial rules of the ISO/IEC Directives, Part 2 (see www.iso.org/directives).

Attention is drawn to the possibility that some of the elements of this document may be the subject of patent rights. ISO shall not be held responsible for identifying any or all such patent rights. Details of any patent rights identified during the development of the document will be in the Introduction and/or on the ISO list of patent declarations received (see www.iso.org/patents).

Any trade name used in this document is information given for the convenience of users and does not constitute an endorsement.

For an explanation of the voluntary nature of standards, the meaning of ISO specific terms and expressions related to conformity assessment, as well as information about ISO's adherence to the World Trade Organization (WTO) principles in the Technical Barriers to Trade (TBT), see www.iso.org/iso/foreword.html.

This document was prepared by Technical Committee ISO/TC 22, *Road vehicles*, Subcommittee SC 32, *Electrical and electronic components and general system aspects*.

A list of all parts in the ISO 11451 series can be found on the ISO website.

Any feedback or questions on this document should be directed to the user's national standards body. A complete listing of these bodies can be found at www.iso.org/members.html.

© ISO 2023 – All rights reserved

Documents
Document Sharing Hub
Full document details: BS ISO 11451-5:2023

Documents
Document Sharing Hub

Road vehicles — Vehicle test methods for electrical disturbances from narrowband radiated electromagnetic energy —

Part 5:
Reverberation chamber

1 Scope

This document specifies methods for testing the immunity of passenger cars and commercial vehicles to electromagnetic disturbances, regardless of the vehicle propulsion system (e.g. spark ignition engine, diesel engine, electric motor) using a reverberation chamber.

The electromagnetic disturbances considered are limited to narrowband electromagnetic fields.

While this document refers specifically to passenger cars and commercial vehicles, generalized as "vehicle(s)", it can readily be applied to other types of vehicles.

ISO 11451-1 specifies general test conditions, definitions, practical use, and basic principles of the test procedure.

Function performance status classification guidelines for immunity to electromagnetic radiation from an off-vehicle radiation source are given in Annex A.

2 Normative references

The following documents are referred to in the text in such a way that some or all of their content constitutes requirements of this document. For dated references, only the edition cited applies. For undated references, the latest edition of the referenced document (including any amendments) applies.

ISO 11451-1:2015, *Road vehicles — Vehicle test methods for electrical disturbances from narrowband radiated electromagnetic energy — Part 1: General principles and terminology*

IEC 61000-4-21, *Electromagnetic compatibility (EMC) – Part 4-21: Testing and measurement techniques – Reverberation chamber test methods*

3 Terms and definitions

For the purposes of this document, the terms and definitions given in ISO 11451-1 and the following apply.

ISO and IEC maintain terminology databases for use in standardization at the following addresses:

— ISO Online browsing platform: available at https://www.iso.org/obp

— IEC Electropedia: available at https://www.electropedia.org/

© ISO 2023 – All rights reserved

Documents
Document Sharing Hub
Full document details: BS ISO 11451-5:2023

3.1
mean absorption cross section
ACS

$$A_{\mathrm{acs}} = \langle \sigma_{\mathrm{a}} \rangle_{\Omega} = \frac{1}{8\pi} \iint_{4\pi} \left(\sigma_{\mathrm{a,TE}} + \sigma_{\mathrm{a,TM}} \right) d\Omega$$

where

σ_{a} is the absorption cross section for incident waves from a spatial direction averaged over TE and TM waves;

$\sigma_{\mathrm{a,TE}}$ is the absorption cross section for incident TE waves from a spatial direction;

$\sigma_{\mathrm{a,TM}}$ is the absorption cross section for incident TM waves from a spatial direction;

Ω is the solid angle which is 4π for the full sphere (i.e. waves from all angles).

Note 1 to entry: It is the measure for the ability of a vehicle to absorb energy in a *reverberation chamber* (3.16). It gives the cross section area of an equivalent ideal absorber without any reflections or scattering, which absorbs the same energy as the vehicle in the reverberation chamber. In contrast to the *chamber loading factor (CLF)* (3.5), the ACS is a property of the vehicle only and is the same for all reverberation chambers. Therefore, it allows determination of the necessary extra power to compensate the loading effects by the vehicle without a loading factor measurement or a new chamber characterization with vehicle.

Note 2 to entry: See Annexes H and L.

Note 3 to entry: See Reference [19].

3.2
antenna characterization factor
ACF
ratio of the average received power to forward power obtained in the antenna characterization of the empty chamber characterization

Note 1 to entry: See 8.5.2.

3.3
cavity mode method
method adopting chamber modes to generate the required field strength with less power for the frequency between *TLS method* (3.22) and the *lowest usable frequency (LUF)* (3.11), typically (30-80) MHz, where the chamber has a lower mode density

Note 1 to entry: See Annex F.

3.4
chamber characterization factor
CCF
normalized average received power with the vehicle present

Note 1 to entry: See 8.5.2.

3.5
chamber loading factor
CLF
ratio of the *antenna characterization factor* (3.2) to the *chamber characterization factor* (3.4)

Note 1 to entry: See 8.5.2.

Note 2 to entry: It is a measure for the additional loading of the chamber due to the test setup including, for example, the vehicle and the *support equipment* (3.21).

© ISO 2023 – All rights reserved
Documents
Document Sharing Hub
Full document details: BS ISO 11451-5:2023

3.6
chamber time constant
mean time decay of the received power delay profile in a *reverberation chamber* (3.16)

Note 1 to entry: See Annexes H and L.

3.7
charging mode
mode of operation intended for charging the rechargeable energy storage system (storage system that provides electric energy for electric propulsion which can be recharged)

3.7.1
charging mode 1
charging mode (3.7) where the vehicle is connected to a standard socket-outlet of an AC supply network, utilizing a cable and plug, both of which are not fitted with any supplementary pilot or auxiliary contacts

Note 1 to entry: In some countries, mode 1 charging can be prohibited or requires special precautions.

Note 2 to entry: Charging mode 1 is defined in IEC 61851-1:2017,6.2.1.

3.7.2
charging mode 2
charging mode (3.7) where the vehicle is connected to AC mains using a charging cable, which has an *EV supply equipment (EVSE)* (3.10) box in-line (e.g. in-cable control box / in-cable control and protection device), providing control pilot signalling between the vehicle and the EVSE box and personal protection against electric shock

Note 1 to entry: In some countries, special restrictions are applied for mode 2 charging.

Note 2 to entry: There is no communication with the vehicle.

Note 3 to entry: Charging mode 2 is defined in IEC 61851-1:2017,6.2.2.

3.7.3
charging mode 3
charging mode (3.7) where the vehicle is connected to a fixed installation [*EV supply equipment (EVSE)* (3.10), e.g. AC charging station, AC wallbox] providing AC power to the vehicle, with communication between the vehicle and the EVSE (through signal/control lines and/or through wired network lines)

Note 1 to entry: Charging mode 3 is defined in IEC 61851-1:2017,6.2.3.

3.7.4
charging mode 4
charging mode (3.7) where the vehicle is connected to a fixed installation [*EV supply equipment (EVSE)* (3.10), e.g. DC charging station], providing DC power to the vehicle (with an off-board charger), with communication between the vehicle and the EVSE (through signal/control lines and/or through wired network lines)

Note 1 to entry: Charging mode 4 is defined in IEC 61851-1:2017,6.2.4.

3.8
coherence time of the reverberation chamber
time interval between two independent *stirring configurations* (3.19) in *stirred mode* (3.18)

Note 1 to entry: The field in the *reverberation chamber* (3.16) conserves its statistical properties [e.g. the positions of the field maxima and minima in the *working volume* (3.27)] during the coherence time.

© ISO 2023 – All rights reserved

Documents
Document Sharing Hub
Full document details: BS ISO 11451-5:2023

3.9
CDF
cumulative distribution function
probability that the electromagnetic field strength is less or equal to a specific value

Note 1 to entry: A value of this function can be used as levelling target (e.g. 100 V/m at CDF 0,2 means 20 % of the measured electric field strength values are less or equal to 100 V/m and 80 % are higher than 100 V/m).

3.10
EVSE
EV supply equipment
equipment or a combination of equipment, providing dedicated functions to supply electric energy from a fixed electrical installation or supply network to an EV for the purpose of charging

3.11
lowest usable frequency
LUF
lowest frequency for which the field uniformity requirements are met for the *reverb method* (3.17) and at least 12 independent *stirring configurations* (3.19) can be achieved

Note 1 to entry: The LUF is determined in accordance with C.6.

3.12
maximum chamber loading factor
MLF
figure of merit corresponding to the worst case loading configuration for which the field uniformity has been demonstrated

Note 1 to entry: See 8.5.2.

3.13
periodization
method to define an analysis time window for the calculation of autocorrelation coefficients based on the complete period of a periodic stirring process sequence

3.14
power delay profile
PDP
temporal behaviour of the power decay in a *reverberation chamber* (3.16) after switch-off of the power source

3.15
quasi-tuned mode
operating mode of a *reverberation chamber* (3.16) where the response time of the DUT to the external field is shorter than the *coherence time of the reverberation chamber* (3.8)

Note 1 to entry: See D.3.1.

3.16
reverberation chamber
high Q shielded room (cavity) whose boundary conditions are changed via one or several rotating tuners or moving walls (including *vibrating intrinsic reverberation chambers (VIRCs)* (3.28) with or without conductive contact to the floor) or repositioning of the transmitting antenna(s)

Note 1 to entry: This results in a statistically uniform electromagnetic field.

3.17
reverb method
usage of a *reverberation chamber* (3.16) above the *lowest usable frequency (LUF)* (3.11)

© ISO 2023 – All rights reserved
Documents
Document Sharing Hub
Full document details: BS ISO 11451-5:2023

3.18
stirred mode
operating mode of a *reverberation chamber* (3.16) where a *tuner* (3.25) or a *vibrating intrinsic reverberation chamber (VIRC)* (3.28) shaker is moved continuously while the test is running

3.19
stirring configuration
unique set of conditions that defines the RF environment

Note 1 to entry: It can stand for a single *tuner* (3.25) in a fixed position as in classical *reverberation chambers* (3.16). In addition, it can stand for a position of a *vibrating intrinsic reverberation chamber (VIRC)* (3.28) at a point in time, for a momentary frequency in case of frequency stirring, or a transmitting antenna configuration.

3.20
stirring scheme
operating mode of a *reverberation chamber* (3.16) that is a *stirred mode* (3.18) or a *tuned mode* (3.24) or a combination thereof

3.21
support equipment
equipment associated with performing an EMC test on a vehicle including (but not all inclusive) load simulator, charging cables, AMN(s), HV-AN(s), AAN(s), DUT monitoring equipment including fibre optic interface modules and TV camera

3.22
TLS method
method using a TLS (similar as in ISO 11451-2) inside a *reverberation chamber* (3.16) and which extends the usage beyond TEM-waveguide testing up to the *lowest usable frequency (LUF)* (3.11) of the reverberation chamber

Note 1 to entry: See Annex E.

3.23
total antenna efficiency
ratio of radiated power to forward power at antenna port, it is less than 1 or 100 % due to mismatching and losses of the antenna (e.g. ohmic loss of metallic material and dielectric loss of insulation)

Note 1 to entry: See Annex J.

3.24
tuned mode
operating mode of a *reverberation chamber* (3.16) where the *tuner* (3.25) is moved stepwise to fixed positions and the test is repeated successively at each of those fixed tuner positions

3.25
tuner
large metallic reflector capable of changing the electromagnetic boundary conditions in a *reverberation chamber* (3.16) as it rotates or moves

Note 1 to entry: As the tuner moves, the nulls and maximums in the field change location, ensuring the vehicle is exposed to a statistically uniform field.

3.26
windowing
method to define an analysis time window for the calculation of autocorrelation coefficients based on a part of a stirring process sequence

3.27
working volume
volume within the *reverberation chamber* (3.16) that contains the vehicle, the *support equipment* (3.21), and the receiving antenna, if used

© ISO 2023 – All rights reserved

Documents
Document Sharing Hub
Full document details: BS ISO 11451-5:2023

3.28
VIRC
vibrating intrinsic reverberation chamber
tent-like structure formed by conductive fabrics where movements of the walls are excited, e.g. by moving arms which push and pull corners or edges of the tent

4 Test conditions

The applicable frequency range for the reverb method is LUF to 18 000 MHz. Testing over the full frequency range could require different field-generating devices, but this does not imply that testing of overlapping frequency ranges is required.

NOTE The applicable frequency range is 0,01 MHz to LUF for the TLS method (see Annex E), 30 MHz to LUF for the cavity mode method (see Annex F), and LUF to 18 000 MHz for the other reverb methods (see Annexes G, H and I).

The user shall specify the test severity level or levels over the frequency range. Suggested test severity levels are given in Annex A.

Standard test conditions are given in ISO 11451-1 for the following:

— test temperature;

— supply voltage;

— modulation;

— dwell time;

— frequency step sizes;

— definition of test severity levels;

— test signal quality.

5 Test location

5.1 Reverberation chamber description

The test shall be performed in a reverberation chamber.

The aim of using a reverberation chamber is to create statistically homogeneous and isotropic electromagnetic fields within the working volume.

These conditions are not valid close to the ground floor in the working volume (see 5.2).

A reverberation chamber for vehicle testing consists of a shielded enclosure, one or several field generating devices, and some mechanical apparatus to change the boundary conditions for the electromagnetic fields. This mechanical apparatus may, for example, contain one or several rotating tuners or moving walls, or may even be realized by using conductive fabrics as shielded enclosure (e.g. a VIRC).

The chamber may contain a vehicle dynamometer, a turntable or both.

It may also contain a TLS (see Annex E) or other type of field generators (e.g. tunable monopoles, see Annex F) as field generating device for testing from 0,01 MHz to the LUF.

The chamber may also contain one or several receiving antennas and one or more field probes.

The size, shape and construction of the reverberation chamber can vary considerably. The minimum size of the shielded enclosure is determined by the size of the test region needed, the size of the

© ISO 2023 – All rights reserved
AVA Documents Document Sharing Hub
Full document details: BS ISO 11451-5:2023

field generation device or devices, the size and shape and location of the tuner or tuners, the needed clearances between all these and the largest vehicle to be tested, and the intended LUF of the chamber. An example of a rectangular reverberation chamber with one mechanical tuner and one field generating antenna is shown in Figure 1.

After initial construction, the reverberation chamber shall be characterized in accordance with the test methods intended to be used. For the reverb method, the chamber shall fulfil the field uniformity requirements of Table C.2. The LUF of the reverberation chamber is determined during this initial characterization. Following any major modifications, a new chamber characterization shall be carried out again. Changes to the tuners shall be considered a major modification.

5.2 Working volume

The working volume is the volume that contains the vehicle, any support equipment and the receiving antenna, if used. The form of the working volume shall be a cuboid.

The minimum distance between the working volume and the walls and ceiling of the shielded enclosure or any tuner or any transmitting antenna shall be at least $\lambda/4$ at the lowest used frequency of the reverb method.

The working volume for testing vehicles starts directly on the ground plane in order to contain the full vehicle. Although this differs from the IEC 61000-4-21 working volume definition, for the purpose of chamber calibration, the reverb reference points described in IEC 61000-4-21 shall be used.

NOTE For the TLS method (see Annex E), and the cavity mode method (see Annex F), the $\lambda/4$ minimum distance requirement does not apply.

More than one vehicle can be tested in one immunity test (e.g. testing of communication between vehicles). If the distance between the vehicles is closer than $\lambda/4$ at the lowest tested frequency there could be significant interaction between the vehicles. This can be desirable for investigating proximity effects. If the distance between the vehicles is larger than $\lambda/4$ at the lowest tested frequency there will be scattering between the vehicles similar to the scattering from walls, etc. Therefore, this test can be interpreted as the simultaneous independent test of multiple vehicles. In either case, the field homogeneity requirements shall still be fulfilled with multiple vehicles present and the loading shall be compensated appropriately as defined in the applicable test method.

6 Test instrumentation

6.1 General

Testing consists of generating radiated electromagnetic fields using antenna sets with radio frequency (RF) sources capable of producing the desired field strength over the range of test frequencies.

The following test instrumentation is used:

— field generating device(s): e.g. antenna(s);

— field probe(s);

— RF signal generator with internal or external modulation capability;

— high power amplifier(s);

— power meter (or equivalent measuring instrument) to measure forward power and reflected power;

— optional: receiving antenna(s) and spectrum analyser;

— optional: vector network analyser.

© ISO 2023 – All rights reserved

Documents
Document Sharing Hub
Full document details: BS ISO 11451-5:2023

6.2 Field generating device

A transmitting antenna is used as the field generating device for the reverb method.

NOTE The TLS method (see Annex E) uses a TLS as a field generation device, and the cavity mode method (see Annex F) uses tunable monopoles.

Multiple antennas, amplifiers and directional couplers may be necessary to cover the complete frequency range.

The transmitting antenna(s) shall be linearly polarized antenna(s) capable of satisfying the frequency requirements. The antenna efficiency should be at least 75 % (log periodic and horn antennas typically fulfil this requirement). An example with a horn antenna is shown in Figure 1.

6.3 Field probes

Field probes shall be capable of measuring electric field strength in three orthogonal axes. The communication lines from the probes shall be fibre optic links. The sampling rate, bandwidth and dynamic range of the probe shall be capable to measure accurately the field. This is especially important for fast stirred mode techniques.

At high frequencies, the radiation characteristics of the field probes will deviate from the ideal one, due to size relative to wavelength, symmetry and other properties. Above which frequency, this happens or if it is relevant in the frequency range of the probe, depends on the probe properties. For application in the reverberation chamber, the directivity and isotropy of the field probe itself does not matter, since for measuring the mean and maximum values, only the total radiation efficiency of the probe axis is important not the gain. Annex K describes a method, how to measure and compensate diffuse-field correction factors for field probes. If the properties of a field probe in the diffuse-field are not known, it is recommended to determine the diffuse-field correction factor according to Annex K, and in case deviations are identified, to correct them.

6.4 Stimulation and monitoring of the device under test (DUT)

The vehicle shall be operated as required in the test plan by using actuators which have a minimum effect on the electromagnetic characteristics, e.g. plastic blocks on the push-buttons, pneumatic actuators with plastic tubes.

Connections to equipment monitoring electromagnetic interference reactions of the vehicle may be accomplished by using fibre-optics, or high resistance leads. Other type of leads may be used but require extreme care to minimize interactions. The orientation, length and location of such leads shall be carefully documented to ensure repeatability of test results.

Any electrical connection of monitoring equipment to the vehicle may cause malfunctions of the vehicle. Extreme care shall be taken to avoid such an effect.

6.5 Optional: receiving antenna(s) and spectrum analyser

For chamber characterization and test, receiving antenna(s) and a spectrum analyser may be used to measure the received power. This measurement may be used to determine the chamber loading factor due to the vehicle and the support equipment (see 8.5.2).

© ISO 2023 – All rights reserved
Documents
Document Sharing Hub
Full document details: BS ISO 11451-5:2023

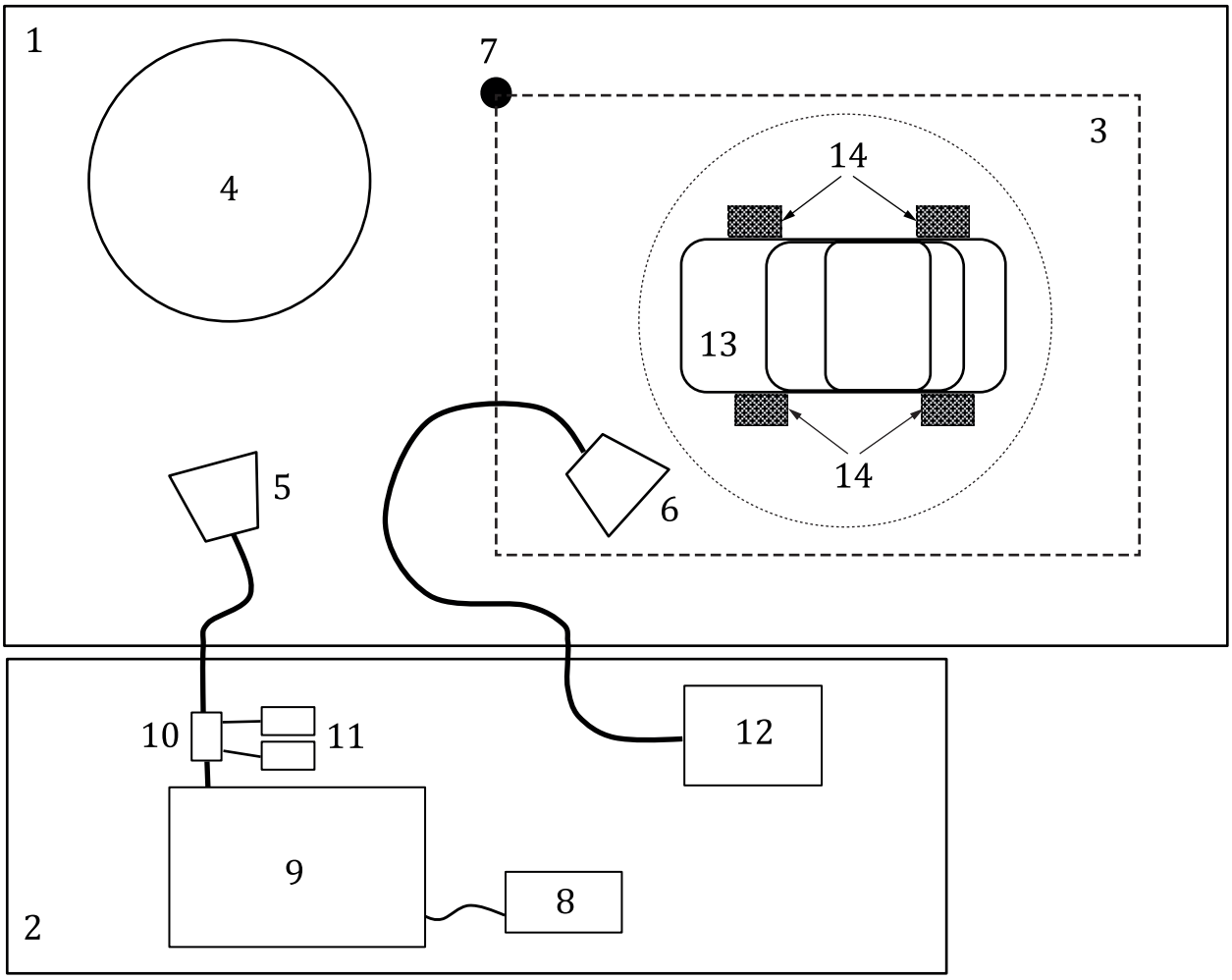

Key

1 reverberation chamber / VIRC
2 amplifier / operator room
3 working volume
4 tuner, if used
5 transmitting antenna
6 receiving antenna, if used
7 field probe(s), if used
8 RF signal generator
9 RF amplifier
10 directional coupler
11 power meters
12 spectrum analyser, if used
13 vehicle
14 dynamometer (with or without turn-table)

Figure 1 — Example of a reverberation chamber

6.6 Optional: vector network analyser

For the VNA method (Annex I) and measurement of the chamber time constant with the spectral method (Annex L), and of antenna efficiencies (Annex J), a vector network analyser shall be used.

7 Test set-up

Four test setups are described:

— one for all type of vehicles when they are not in charging mode,

— one for vehicles in charging mode 1 or mode 2 (AC powered, without communication),

© ISO 2023 – All rights reserved

Documents
Document Sharing Hub
Full document details: BS ISO 11451-5:2023

— one for vehicles in charging mode 3 or mode 4 (AC or DC powered, with communication),

— one for vehicles in charging mode through wireless power transmission (WPT).

7.1 Vehicle placement

The vehicle shall be placed in the working volume. The working volume may contain a vehicle dynamometer or turntable or both (see Figure 1).

7.2 Field generating device location – Antenna constraints

The location of the transmitting antenna(s) shall be the same for both characterization and testing. The transmitting antenna shall not directly illuminate the working volume. The transmitting antenna should be directed into a corner of the chamber if possible (see Figure 1 for location of a transmitting antenna as example). Directing the antenna into the tuner is also acceptable.

NOTE An upward tilt of the antenna is advisable to avoid direct incident wave illumination of the chamber wall resulting in a potentially high VSWR situation.

7.3 Vehicle test configurations

The configuration of 7.3.1 is applicable to all vehicle types (combustion engine, electric or hybrid propulsion).

The configuration of 7.3.2 is applicable only to the electric or hybrid / plugin propelled vehicles when they are in charging mode 1 or mode 2.

The configuration of 7.3.3 is applicable only to the electric or hybrid / plugin propelled vehicles when they are in charging mode 3 or mode 4.

The configuration of 7.3.4 is applicable only to the electric propelled vehicles when they are in charging mode through wireless power transmission (WPT).

7.3.1 Vehicle not connected to the power grid

An example of a test set-up is shown in Figure 1.

7.3.2 Vehicle in charging mode 1 or mode 2 (AC powered, without communication)

7.3.2.1 General

This configuration concerns only charging mode 1 and mode 2.

The vehicle, AMN(s) and power charging cable shall be placed in the working volume.

Examples of test set-ups are shown in Figure 2 and Figure 3.

7.3.2.2 Power mains

The power mains socket may be placed anywhere in the test location (including the working volume) with the following conditions:

— the socket(s) shall be placed on the ground plane;

— the length of the cable between the power mains socket and the AMN(s) shall be kept as short as possible;

— the cable between the power mains socket and the AMN shall be placed directly on the ground plane.

© ISO 2023 – All rights reserved
Documents
Document Sharing Hub
Full document details: BS ISO 11451-5:2023

Care shall be taken to avoid disturbances to the off-board peripheral equipment.

7.3.2.3 Artificial mains network

Power mains shall be applied to the vehicle through 50 µH/50 Ω artificial mains networks (AMN(s)) as defined in ISO 11451-1:2015, Annex B.

The AMN(s) shall be mounted directly on the ground plane. The case of the AMN(s) shall be bonded to the ground plane.

The measuring port of each AMN shall be terminated with a 50 Ω load.

7.3.2.4 Power charging cable

The power charging cable shall be laid out in a straight line between the AMN(s) and the vehicle charging inlet and shall be routed perpendicularly to the vehicle's longitudinal axis (see Figure 2 and Figure 3). The projected cable length from the side of the AMN(s) to the side of the vehicle shall be (800 (+200 / −0)) mm as shown in Figure 2 and Figure 3.

For a longer cable, the extraneous length shall be "Z-folded" symmetrically. No contact or overlap is allowed between windings. The width of the Z-folded cable shall be between 500 mm and 1 000 mm. If it is impractical to do so because of cable bulk or stiffness, or because the testing is being done at a user's installation, the disposition of the excess cable length shall be precisely noted in the test report.

The charging cable at the vehicle side shall hang vertically at a distance of (100 (+200 / −0)) mm from the vehicle body.

The whole cable shall be placed on a non-conductive, low relative permittivity (dielectric-constant) material ($\varepsilon_r \leq 1{,}4$), at (100 ± 25) mm above the ground plane.

Unless otherwise specified the mode 1 or mode 2 charging cable provided by the manufacturer shall be used and shall have a maximum length of 10 m.

If the vehicle manufacturer delivers more than one mode 1 or mode 2 cable, the measurements may be performed with one representative cable for each mode.

Dimensions in millimetres

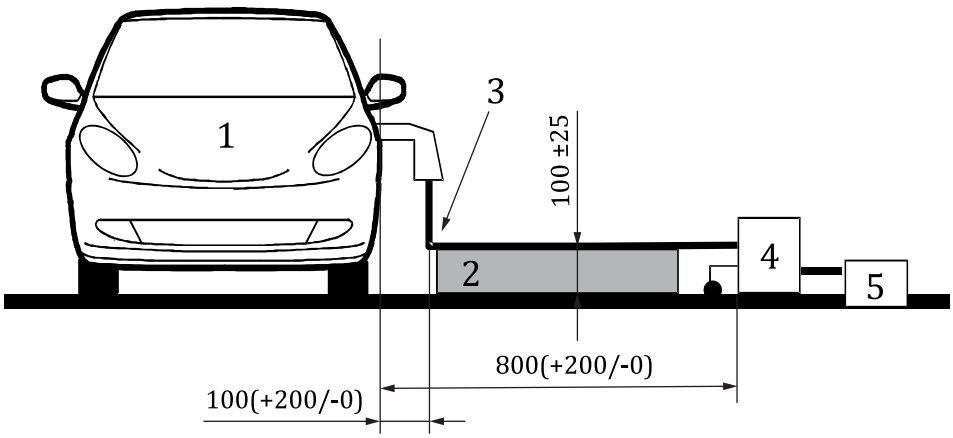

a) Front view

© ISO 2023 – All rights reserved

Documents
Document Sharing Hub
Full document details: BS ISO 11451-5:2023

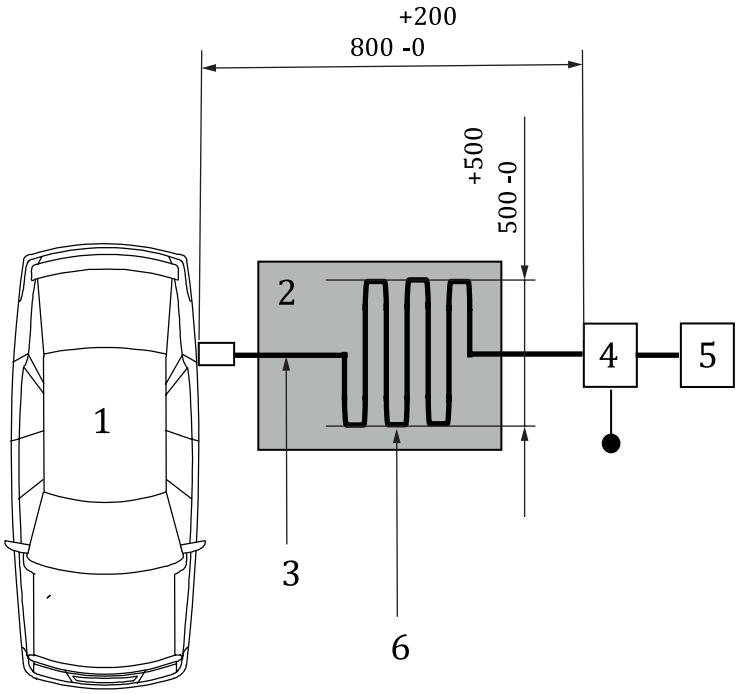

b) Top view

Key

1 vehicle under test
2 insulating support
3 charging cable (including EVSE for charging mode 2)
4 artificial mains network(s) grounded
5 power mains socket (see 7.3.2.2)
6 extraneous length Z-folded

NOTE The cable between the AC mains and the AMN does not need to be aligned in same direction as the cable between the AMN and the EV.

Figure 2 — Example of test setup for vehicle with socket located on vehicle side (charging mode 1 or mode 2, AC powered, without communication)

Dimensions in millimetres

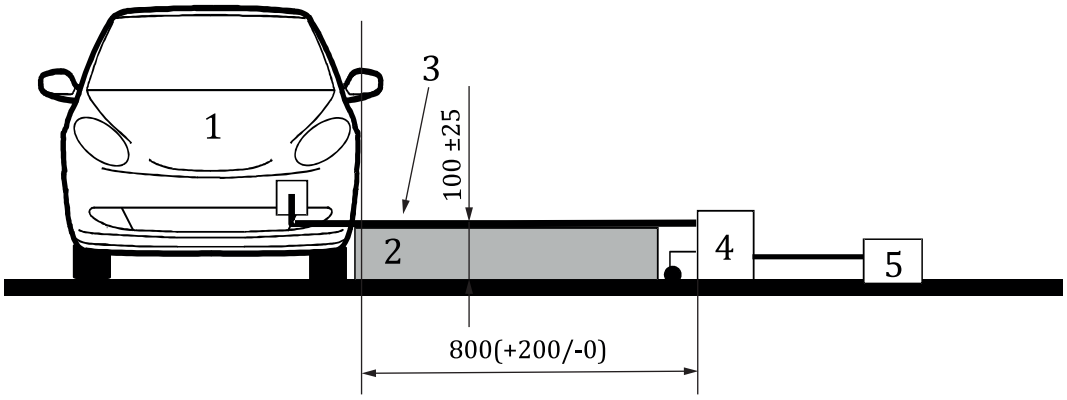

a) Front view

© ISO 2023 – All rights reserved
Documents
Document Sharing Hub
Full document details: BS ISO 11451-5:2023

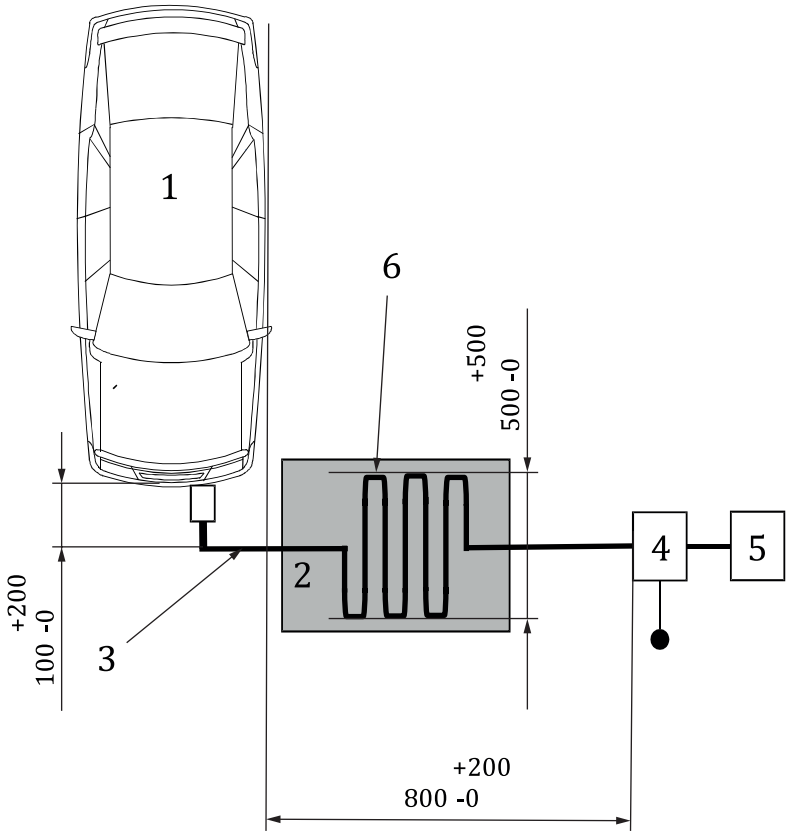

b) Top view

Key

1 vehicle under test
2 insulating support
3 charging cable (including EVSE for charging mode 2)
4 artificial mains network(s) grounded
5 power mains socket (see 7.3.2.2)
6 extraneous length Z-folded

NOTE The cable between the AC mains and the AMN does not need to be aligned in same direction as the cable between the AMN and the EV.

Figure 3 — Example of test setup for vehicle with socket located front / rear of vehicle (charging mode 1 or mode 2, AC powered, without communication)

7.3.3 Vehicle in charging mode 3 or mode 4 (AC or DC powered, with communication)

7.3.3.1 General

This configuration concerns charging mode 3 and mode 4.

The vehicle, HV-AN(s)/AMN(s), AAN(s) and power charging harness shall be placed in the working volume.

Examples of test setups are shown in Figure 4 and Figure 5.

© ISO 2023 – All rights reserved

Documents
Document Sharing Hub
Full document details: BS ISO 11451-5:2023

7.3.3.2 Charging station / power mains

The charging station may be placed either in the test location (including the working volume) or outside the test location.

If the communication between the vehicle and the charging station can be simulated, the charging station may be replaced by a power supply connected to the AC power mains network.

In both cases, power mains/supply and communication or signal lines socket(s) shall be placed in the test location with the following conditions:

— the socket(s) shall be placed on the ground plane;

— the length of the cable between the power mains/supply socket(s) and the AMN(s) or DC-charging-AN(s) should be kept as short as possible and shall be placed directly on the ground plane;

— the length of the cable between the communication socket(s) and the AAN(s) should be kept as short as possible and shall be placed directly on the ground plane.

If the charging station is placed inside the reverberation chamber, then the harnesses between the charging station and the power mains or communication socket shall satisfy the following conditions:

— the harness at charging station side shall hang vertically down to the ground plane;

— the extraneous length shall be placed directly on the ground plane and “Z-folded” if necessary. If it is impractical to do so because of cable bulk or stiffness, or because the testing is being done at a user's installation, the disposition of the excess cable shall be precisely noted in the test report.

Care shall be taken to avoid disturbances to the off-board peripheral equipment.

NOTE In a reverberation chamber, strong electromagnetic fields are everywhere, not only in the working volume. Shielding the off-board power unit or placing it outside can be the simplest countermeasures to avoid disturbances.

7.3.3.3 Artificial networks

AC power mains shall be applied to the vehicle through 50 µH/50 Ω AMN(s) as defined in ISO 11451-1:2015, Annex B.

DC power mains shall be applied to the vehicle through 5 µH/50 Ω HV-AN(s) as defined in ISO 11451-1:2015, Annex B.

The AMN(s)/HV-AN(s) shall be mounted directly on the ground plane. The case of the AMN(s)/HV-AN(s) shall be bonded to the ground plane.

The measuring port of each AMN/HV-AN shall be terminated with a 50 Ω load.

7.3.3.4 Asymmetric artificial network

Communication lines connected to signal/control ports and lines connected to wired network ports shall be applied to the vehicle through AAN(s).

The various AAN(s) that shall be used are defined in Annex M and in ISO 11451-1:2015, Annex B:

— ISO 11451-1:2015, B.4.1 for signal/control ports with symmetric lines,

— ISO 11451-1:2015, B.4.3 for signal/control ports with PLC technology on the control pilot line and

— M.1 for signal/control ports with a control pilot line.

The AAN(s) shall be mounted directly on the ground plane. The case of the AAN(s) shall be bonded to the ground plane.

© ISO 2023 – All rights reserved
Documents
Document Sharing Hub
Full document details: BS ISO 11451-5:2023

The measuring port of each AAN shall be terminated with a 50 Ω load.

If a charging station is used, AAN(s) are not required for the signal/control ports and/or for the wired network ports. The communication lines between the vehicle and the charging station shall be connected to the associated equipment on the charging station side as in typical installations.

If communication is emulated (i.e. the charging station is replaced by a power supply) and if the presence of the AAN prevents proper communication then no AAN shall be used.

7.3.3.5 Power charging harness

The power (charging) harness, including the power and the communication wires/cables, shall be laid out in a straight line between the AMN(s)/HV-AN(s) / AAN(s) and the vehicle charging inlet and shall be routed perpendicularly to the vehicle's longitudinal axis (see Figure 4 and Figure 5). The projected harness length from the side of the AMN(s)/HV-AN(s) / AAN(s) to the side of the vehicle shall be (800 (+200 / −0)) mm.

For a longer harness, the extraneous length shall be “Z-folded” symmetrically. No contact or overlap is allowed between windings. The width of the Z-folded cable shall be between 500 mm and 1 000 mm. If it is impractical to do so because of harness bulk or stiffness, or because the testing is being done at a user installation, the disposition of the excess harness shall be precisely noted in the test report.

The power (charging) harness, including the power and the communication wires/cables, at the vehicle side shall hang vertically at a distance of (100 (+200 / −0)) mm from the vehicle body.

The whole harness shall be placed on a non-conductive, low relative permittivity (dielectric-constant) material (ε_r ≤ 1,4), at (100 ± 25) mm above the ground plane.

Unless otherwise specified the mode 3 charging cable provided by the manufacturer shall be used and shall have a length greater than 2 m but shorter or equal to 10 m.

If the vehicle manufacturer delivers more than one mode 3 cable, the measurements may be performed with one representative mode 3 cable.

Unless otherwise specified the mode 4 charging cable of the test facility shall be used.

Dimensions in millimetres

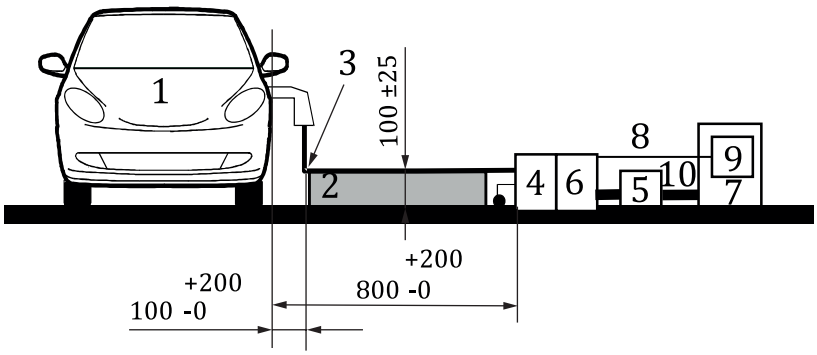

a) Front view

© ISO 2023 – All rights reserved

Documents
Document Sharing Hub
Full document details: BS ISO 11451-5:2023

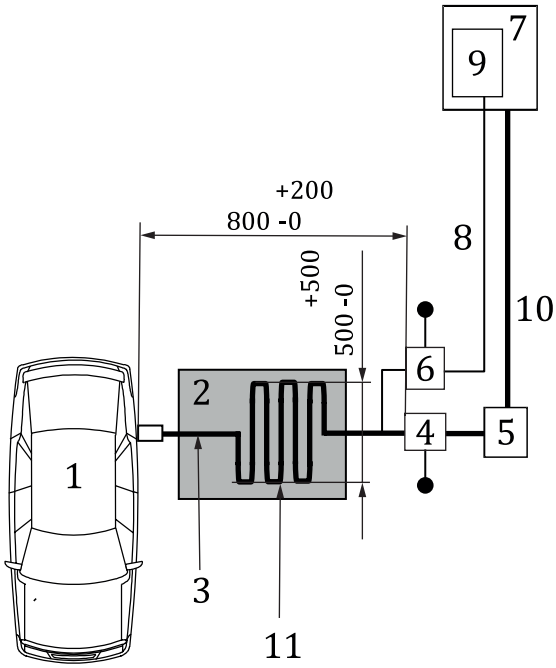

b) Top view

Key

1 vehicle under test
2 insulating support
3 charging harness with communication lines
4 AMN(s) or DC-charging-AN(s), grounded
5 power mains / supply socket (optional, see 7.3.3.2)
6 AAN(s), grounded (optional, not represented in the front view)
7 charging station (can be emulated)
8 communication lines
9 communication module
10 power cable
11 extraneous length Z-folded

NOTE The cable between the AC/DC mains/supply and the AMN/DC-charging-AN does not need to be aligned in same direction as the cable between the AMN/DC-charging-AN and the EV.

Figure 4 — Example of test setup for vehicle with socket located on vehicle side (charging mode 3 or mode 4, AC or DC powered, with communication)

Dimensions in millimetres

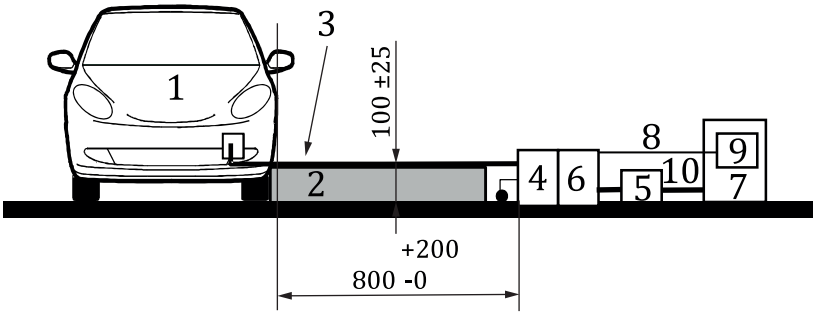

a) Front view

© ISO 2023 – All rights reserved
Documents
Document Sharing Hub
Full document details: BS ISO 11451-5:2023

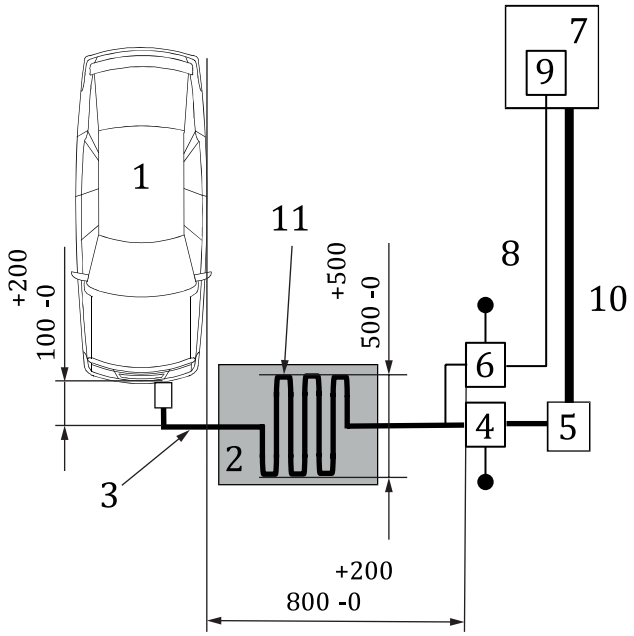

b) Top view

Key

1 vehicle under test
2 insulating support
3 charging harness with communication lines
4 AMN(s) or DC-charging-AN(s), grounded
5 power mains / supply socket (optional, see 7.3.3.2)
6 AAN(s), grounded (optional, not represented in the front view)
7 charging station (can be emulated)
8 communication lines
9 communication module
10 power cable
11 extraneous length Z-folded

NOTE The cable between the AC/DC mains/supply and the AMN/DC-charging-AN does not need to be aligned in same direction as the cable between the AMN/DC-charging-AN and the EV.

Figure 5 — Example of test setup for vehicle with plug located front/rear of vehicle (charging mode 3 or mode 4, AC or DC powered, with communication)

7.3.4 Vehicle in charging mode through wireless power transmission (WPT)

The wireless power transfer (WPT) system mainly consists of a primary device (ground side), a secondary device (vehicle side) and an off-board power unit. In some designs, the primary device and the off-board power unit are both integrated in a single unit.

7.3.4.1 Off-board power unit

The off-board power unit may be placed outside of the reverberation chamber or anywhere on the ground plane of the reverberation chamber.

© ISO 2023 – All rights reserved

Documents
Document Sharing Hub
Full document details: BS ISO 11451-5:2023

Care shall be taken to avoid disturbances of the off-board power unit.

NOTE In a reverberation chamber, strong electromagnetic fields are everywhere, not only in the working volume. Shielding the off-board power unit or placing it outside can be the simplest countermeasures to avoid disturbances.

The off-board power unit shall be bonded to ground (≤ 2,5 mΩ).

The harness between the off-board power unit and the primary device shall be placed directly on the ground plane.

Use of an artificial mains network (AMN) is recommended on the AC mains feed to the supply device (off-board power device).

If the off-board power unit is placed inside the test site then the harness between the off-board power unit and the primary device shall satisfy the following conditions:

— the harness on the off-board power unit side shall hang vertically down to the ground plane;

— the extraneous length shall be placed directly on the ground plane and “Z folded” if necessary.

7.3.4.2 Primary device

The primary device shall be aligned with the vehicle's secondary device. The distance(s) between the primary device and the secondary device shall be defined in the test plan and documented in the test report.

In order to prevent coupling with the ground floor, the primary device shall be raised above the ground plane by non-magnetic and non-metallic material.

The functionality of wireless power transfer shall be ensured by adapting the height of the primary device above the ground plane, so that the air gap between primary and secondary devices emulate the actual coupling that would otherwise be seen by the system. This may lead to the raising of the vehicle under test on metallic spacers such that the necessary air gap separation distance is maintained between the primary and secondary devices.

However, the cable between the primary device and the off-board power unit shall be placed directly on the ground plane.

The arrangement of the vehicle, its secondary device and the primary device that are used for the test, including the air gap size, the misalignment size and direction, as well as the separation from the metallic ground plane shall be documented in the test report.

Example of a test set-up is shown in Figure 6.

© ISO 2023 – All rights reserved
Documents
Document Sharing Hub
Full document details: BS ISO 11451-5:2023

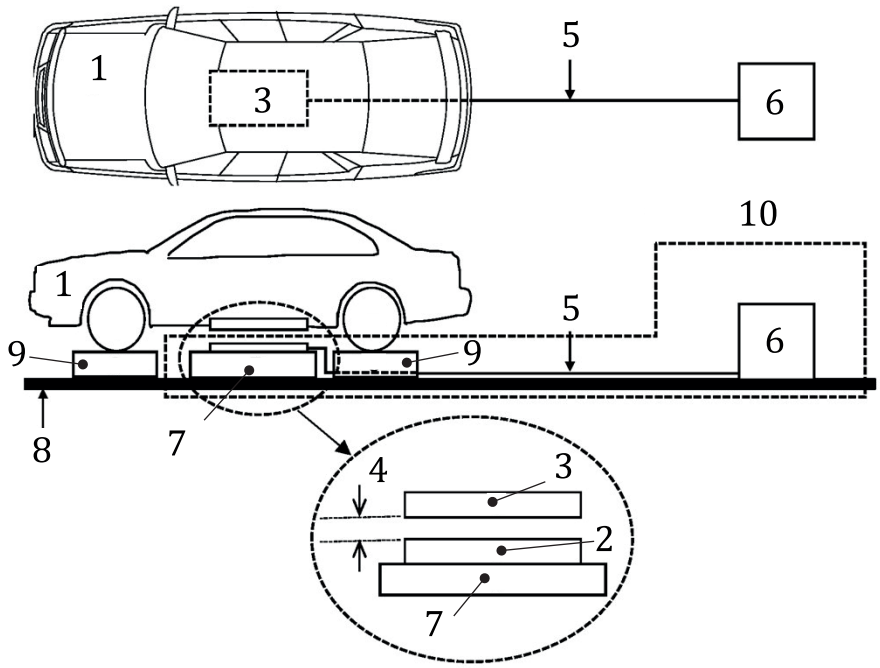

Key

1 vehicle under test
2 primary device (off-board)
3 secondary device (on-board)
4 air gap
5 cable (between primary device and off-board power unit, placed on ground plane directly)
6 off-board power unit (grounded to ground plane)
7 non-magnetic and non-metallic support
8 ground plane
9 metallic spacers (optional)
10 associated equipment: key 2, 5, and 6

Figure 6 — Example of test setup for vehicle in charging mode through wireless power transmission (WPT)

8 Test procedure

8.1 General

CAUTION — Hazardous voltages and fields can exist within the test area. Take care to ensure that the requirements for limiting the exposure of humans to RF energy are met.

The general arrangement of the disturbance source and vehicle represents a standardized test condition. Any deviations from the standard test configuration shall be agreed upon prior to testing and recorded in the test report.

The vehicle shall be made to operate under typical loading and operating conditions. These operating conditions shall be clearly defined in the test plan.

The orientation(s) of the vehicle for radiated immunity tests shall be defined in the test plan.

© ISO 2023 – All rights reserved

Documents
Document Sharing Hub
Full document details: BS ISO 11451-5:2023

In case of tuned mode, the positions of the tuner(s) shall be defined in the test-plan. In case of stirred mode, the speed(s) of the tuner(s) and/or VIRC shaker(s) shall be defined in the test-plan. In case of antenna-stirring, the positions and orientations of the antenna(s) shall be defined in the test plan.

8.2 Stirring configurations

Several stirring methods exist and may be used separately or in combination. They can provide a continuous stirring or a discrete stepped or tuned stirring. Consequently, the mathematical operations included in the formulas to calculate the test level, the number of independent stirring configurations, and the field uniformity shall be modified for each stirring method or each combination. The user of this document has to decide which method or combination of methods to use.

The term stirring configuration leaves the individual method open.

Consequently, the calculation of mean values would include summation over discrete values or integration over proper time spans (e.g. the dwell time used for testing) which practically will be approximated by a proper sampling of the field or power over time and proper summation over the sampled values. With the mean value (or the maximum value) over all stirring configurations (totality of methods or combination of methods chosen by the user shall be applied for calibration and testing), a proper calculation over all relevant stirring methods is meant, denoted as $\langle \cdot \rangle_{sc}$ (or as $\max_{sc}(\cdot)$).

8.3 Test plan

Prior to performing the tests, a test plan shall be generated which shall include:

— test set-up;

— frequency range;

— working volume and reverb reference points (and TLS reference points, if applicable);

— position(s) of receiving antenna(s), if used;

— vehicle mode of operation;

— vehicle acceptance criteria;

— definition of test severity levels;

— vehicle monitoring conditions;

— modulation;

— vehicle orientation;

— positions and/or speed(s) of tuner(s) and/or VIRC shaker(s);

— antenna location(s) of transmitting antenna(s);

— test report content;

and any special instructions and changes from the standard test.

Every DUT shall be verified under the most significant situations, e.g. in stand-by mode and in a mode where all the actuators can be excited.

8.4 Test methods

This document defines several test methods described in the main body and in Annexes E to I. Tables 1 and 2 summarize the main properties of each test method. Tables 1 and 2 are intended to serve as a guide for selecting a test method that best fits the needs.

© ISO 2023 – All rights reserved
Documents
Document Sharing Hub
Full document details: BS ISO 11451-5:2023

Unless otherwise specified, methods described in 8.5.2 or 8.5.3 are the methods to be used. Methods described in Annexes E to I are alternative ones.

Table 1 — Test methods in the main body

Test method	Subclause	Features
Reverb method with substitution method power control + Loading factor method	8.5.2	Frequency range: f_{LUF} to 18 000 MHz Same method as defined in IEC 61000-4-21. Tuned mode and stirred mode are possible. Requires a spectrum analyser or power meter and a receiving antenna for loading determination. Field uniformity check only for maximum loading. As long as actual loading is smaller, validity of field uniformity is assumed. If only one measurement with receiving antenna is used for determining CLF, this method is less accurate than the two other calibration methods for substitution method. The accuracy may be improved by taking measurements with different receiving antenna positions, but this will take more time. Since power control loop typically is faster than field control loop, settling time of test level is faster than with closed-loop method.
Reverb method with substitution method power control + Field calibration with the vehicle present	8.5.3	Frequency range: f_{LUF} to 18 000 MHz Tuned mode and stirred mode are possible. Needs field probes for the calibration for each new vehicle (class) available. For each vehicle (class) the field uniformity is actually measured and allows therefore a direct comparison with the field homogeneity requirements. Thus a too high loading can be directly determined and the (iterative) experimental determination of the maximum permissible loading is not needed. Unless multi-probe setups are used, this method needs the longest loading determination time. Since power control loop typically is faster than field control loop, settling time of test level is faster than with closed-loop method.

Table 2 — Alternative test methods in Annexes

Test method	Annex	Features
TLS method	Annex E	Frequency range: 10 kHz to f_{LUF} Only test method below 30 MHz. Alternative method to cavity mode method in frequency range 30 MHz to f_{LUF}. Only stirred mode possible. Extension of TLS testing with TEM mode to higher frequencies with smooth transition from dominantly vertical polarization to statistically isotropic reverb method.

© ISO 2023 – All rights reserved

Documents
Document Sharing Hub
Full document details: BS ISO 11451-5:2023