BS ISO 11452-4:2020

BSI Standards Publication

Road vehicles — Component test methods for electrical disturbances from narrowband radiated electromagnetic energy

Part 4: Harness excitation methods

Documents
Document Sharing Hub

Full document details: BS ISO 11452-4:2020

National foreword

This British Standard is the UK implementation of ISO 11452-4:2020. It supersedes BS ISO 11452-4:2011, which is withdrawn.

The UK participation in its preparation was entrusted to Technical Committee AUE/16, Data Communication (Road Vehicles).

A list of organizations represented on this committee can be obtained on request to its secretary.

This publication does not purport to include all the necessary provisions of a contract. Users are responsible for its correct application.

© The British Standards Institution 2020
Published by BSI Standards Limited 2020

ISBN 978 0 580 99274 2

ICS 43.040.10; 33.100.20

Compliance with a British Standard cannot confer immunity from legal obligations.

This British Standard was published under the authority of the Standards Policy and Strategy Committee on 30 April 2020.

Amendments/corrigenda issued since publication

Date	Text affected

Documents
Document Sharing Hub

Full document details: BS ISO 11452-4:2020

INTERNATIONAL STANDARD

ISO 11452-4

Fifth edition
2020-04

Road vehicles — Component test methods for electrical disturbances from narrowband radiated electromagnetic energy —

Part 4: Harness excitation methods

Véhicules routiers — Méthodes d'essai d'un équipement soumis à des perturbations électriques par rayonnement d'énergie électromagnétique en bande étroite —

Partie 4: Méthodes d'excitation des faisceaux

Reference number
ISO 11452-4:2020(E)

Documents
Document Sharing Hub

© ISO 2020

Full document details: BS ISO 11452-4:2020

COPYRIGHT PROTECTED DOCUMENT

© ISO 2020

All rights reserved. Unless otherwise specified, or required in the context of its implementation, no part of this publication may be reproduced or utilized otherwise in any form or by any means, electronic or mechanical, including photocopying, or posting on the internet or an intranet, without prior written permission. Permission can be requested from either ISO at the address below or ISO's member body in the country of the requester.

ISO copyright office
CP 401 • Ch. de Blandonnet 8
CH-1214 Vernier, Geneva
Phone: +41 22 749 01 11
Fax: +41 22 749 09 47
Email: copyright@iso.org
Website: www.iso.org

Published in Switzerland

© ISO 2020 – All rights reserved

Documents
Document Sharing Hub

Full document details: BS ISO 11452-4:2020

Contents

Page

Foreword ... **iv**

1 Scope ... **1**

2 Normative references ... **1**

3 Terms and definitions ... **1**

4 Test conditions ... **1**

5 Test location ... **2**

6 Test instrumentation ... **2**
6.1 BCI test method ... 2
6.1.1 General ... 2
6.1.2 Injection probe ... 3
6.1.3 Current measurement probe ... 3
6.1.4 Stimulation and monitoring of the DUT ... 3
6.2 TWC test method ... 3
6.2.1 General ... 3
6.2.2 Tubular wave coupler ... 3
6.2.3 50 Ω load resistor ... 4
6.2.4 Stimulation and monitoring of the DUT ... 4

7 Test set-up for DUT powered by an unshielded power system ... **4**
7.1 Ground plane ... 4
7.2 Power supply and AN ... 4
7.3 Location of the DUT ... 5
7.4 Location of the test harness ... 5
7.5 Location of the load simulator ... 5
7.6 Location of the harness excitation ... 6
7.6.1 BCI test method ... 6
7.6.2 TWC test method ... 6

8 Test setup for DUT powered by a shielded power system ... **10**
8.1 Ground plane ... 10
8.2 Power supply and AN, HV-AN, AMN and AAN ... 10
8.3 Location of DUT ... 10
8.4 Location of test harness ... 11
8.5 Location of load simulator ... 12
8.6 Location of the harness excitation ... 12
8.6.1 BCI test method ... 12
8.6.2 TWC test method ... 13

9 Test procedure ... **26**
9.1 General ... 26
9.2 Test plan ... 26
9.3 Test methods ... 26
9.3.1 BCI test method ... 26
9.3.2 Tubular wave coupler test method ... 29
9.4 Test report ... 30

Annex A (normative) **Calibration configuration (current injection probe calibration)** ... **32**

Annex B (informative) **Test set-up transfer impedance** ... **34**

Annex C (informative) **Remote/local grounding** ... **40**

Annex D (informative) **Function performance status classification (FPSC)** ... **42**

© ISO 2020 – All rights reserved

Documents
Document Sharing Hub

Full document details: BS ISO 11452-4:2020

Foreword

ISO (the International Organization for Standardization) is a worldwide federation of national standards bodies (ISO member bodies). The work of preparing International Standards is normally carried out through ISO technical committees. Each member body interested in a subject for which a technical committee has been established has the right to be represented on that committee. International organizations, governmental and non-governmental, in liaison with ISO, also take part in the work. ISO collaborates closely with the International Electrotechnical Commission (IEC) on all matters of electrotechnical standardization.

The procedures used to develop this document and those intended for its further maintenance are described in the ISO/IEC Directives, Part 1. In particular, the different approval criteria needed for the different types of ISO documents should be noted. This document was drafted in accordance with the editorial rules of the ISO/IEC Directives, Part 2 (see www.iso.org/directives).

Attention is drawn to the possibility that some of the elements of this document may be the subject of patent rights. ISO shall not be held responsible for identifying any or all such patent rights. Details of any patent rights identified during the development of the document will be in the Introduction and/or on the ISO list of patent declarations received (see www.iso.org/patents).

Any trade name used in this document is information given for the convenience of users and does not constitute an endorsement.

For an explanation of the voluntary nature of standards, the meaning of ISO specific terms and expressions related to conformity assessment, as well as information about ISO's adherence to the World Trade Organization (WTO) principles in the Technical Barriers to Trade (TBT) see www.iso.org/iso/foreword.html.

This document was prepared by Technical Committee ISO/TC 22, *Road vehicles,* Subcommittee SC 32, *Electrical and electronic components and general system aspects*.

This fifth edition cancels and replaces the fourth edition (ISO 11452-4:2011), which has been technically revised. The main changes compared to the previous edition are as follows:

— extension of the frequency range for BCI test method down to 100 kHz;

— introduction to reference to additional artificial networks (HV-AN, AMN, AAN) for DUT powered by a shielded power system;

— precisions for ground plane dimensions;

— addition of test set-up descriptions and Figures for DUT powered by a shielded power system;

— precisions for DUT with multiple connectors; and

— suppression of Annex C relative to artificial networks which are now defined in ISO 11452-1.

A list of all parts in the ISO 11452 series can be found on the ISO website.

Any feedback or questions on this document should be directed to the user's national standards body. A complete listing of these bodies can be found at www.iso.org/members.html.

© ISO 2020 – All rights reserved
Documents
Document Sharing Hub
Full document details: BS ISO 11452-4:2020

Road vehicles — Component test methods for electrical disturbances from narrowband radiated electromagnetic energy —

Part 4: Harness excitation methods

1 Scope

This document specifies harness excitation test methods and procedures for determining the immunity of electronic components of passenger cars and commercial vehicles regardless of the propulsion system (e.g. spark-ignition engine, diesel engine, electric motor).

The bulk current injection (BCI) test method is based on current injection into the wiring harness using a current probe as a transformer where the harness forms the secondary winding.

The tubular wave coupler (TWC) test method is based on a wave coupling into the wiring harness using the directional coupler principle. The TWC test method was developed for immunity testing of automotive components with respect to radiated disturbances in the GHz ranges (GSM bands, UMTS, ISM 2,4 GHz). It is best suited to small (with respect to wavelength) and shielded device under test (DUT), since in these cases the dominating coupling mechanism is via the harness.

The electromagnetic disturbances considered in this document are limited to continuous narrowband electromagnetic fields.

2 Normative references

The following documents are referred to in the text in such a way that some or all of their content constitutes requirements of this document. For dated references, only the edition cited applies. For undated references, the latest edition of the referenced document (including any amendments) applies.

ISO 11452-1:2015, *Road vehicles — Component test methods for electrical disturbances from narrowband radiated electromagnetic energy — Part 1: General principles and terminology*

3 Terms and definitions

For the purposes of this document, the terms and definitions given in ISO 11452-1 apply.

ISO and IEC maintain terminological databases for use in standardization at the following addresses:

— ISO Online browsing platform: available at https://www.iso.org/obp

— IEC Electropedia: available at http://www.electropedia.org/

4 Test conditions

The applicable frequency ranges of the BCI and the TWC test methods are direct functions of the transducer characteristics (current probe or tubular wave coupler). More than one type of transducer may be required.

© ISO 2020 – All rights reserved

Documents
Document Sharing Hub
Full document details: BS ISO 11452-4:2020

To test automotive electronic systems, the typical applicable frequency range:

— of the BCI test method is 100 kHz to 400 MHz,

— of the TWC test method is 400 MHz to 3 GHz.

The users shall specify the test severity level(s) over the frequency range. Suggested test levels are included in Annex D.

Standard test conditions are given in ISO 11452-1 for the following:

— test temperature;

— supply voltage;

— modulation;

— dwell time;

— frequency step sizes;

— definition of test severity levels;

— test signal quality.

5 Test location

The tests shall be performed in a shielded enclosure.

6 Test instrumentation

6.1 BCI test method

6.1.1 General

BCI is a method of carrying out immunity tests by inducing disturbance signals directly into the wiring harness by means of a current injection probe. The injection probe is a current transformer through which the wiring harnesses of the device under test (DUT) are passed. Immunity tests are carried out by varying the test severity level and frequency of the induced disturbance.

The following equipment is used:

— ground plane;

— current injection probe(s);

— current measurement probe(s);

— artificial networks (AN), high voltage artificial networks (HV-AN), artificial mains networks (AMN), and asymmetric artificial networks (AAN);

— radio frequency (RF) generator with internal or external modulation capability;

— power amplifier;

— power measuring instrumentation to measure the forward and reverse power;

— current measurement equipment.

© ISO 2020 – All rights reserved
Documents
Document Sharing Hub
Full document details: BS ISO 11452-4:2020

6.1.2 Injection probe

An injection probe or set of probes capable of operating over the test frequency range is required to couple the test signal to the DUT. The probe(s) shall be capable of withstanding the necessary input power for the maximum test level over the test frequency range regardless of the test set-up loading.

Saturation of the injection probe by test level and by DUT current should be taken into consideration.

6.1.3 Current measurement probe

The current measurement probe or set of probes shall be capable of operating over the test frequency range.

6.1.4 Stimulation and monitoring of the DUT

The DUT shall be operated as required in the test plan by actuators which have a minimum effect on the electromagnetic characteristics, for example plastic blocks on the push-buttons, pneumatic actuators with plastic tubes.

Connections to equipment monitoring electromagnetic interference reactions of the DUT may be accomplished by using fibre-optics, or high-resistance leads. Other type of leads may be used but require extreme care to minimize interactions. The orientation, length and location of such leads shall be carefully documented to ensure repeatability of test results.

Any electrical connection of monitoring equipment to the DUT may cause malfunctions of the DUT. Extreme care shall be taken to avoid such an effect.

6.2 TWC test method

6.2.1 General

The approach of this test method is an equivalent coupling to a plane wave coupling into a wiring harness of automotive components. To realize this, a short 50 Ω coaxial line configuration with open ends, an inner tube-shaped conductor and matched terminations are used to generate a transverse electromagnetic (TEM) wave inside. The wiring harness leads through the inner conductor of the wave coupler. This leads to two disturbing components for the DUT: a TEM wave component coupled via the cable, and a radiated component, caused by the scattering field from the primary TEM wave in the connecting cable between the coupler and the DUT.

The following equipment is used:

— ground plane;

— tubular wave coupler;

— artificial networks (AN), high voltage artificial networks (HV-AN), artificial mains networks (AMN), and asymmetric artificial networks (AAN);

— radio frequency (RF) generator with internal or external modulation capability;

— power amplifier;

— power measuring instrumentation to measure the forward and reverse power.

6.2.2 Tubular wave coupler

A tubular wave coupler is used to couple the disturbances into the test wiring harness. It shall be capable of coupling the test power over the test frequency range into the wiring harness and shall have a sufficiently high coupling and power rating.

© ISO 2020 – All rights reserved

Documents
Document Sharing Hub
Full document details: BS ISO 11452-4:2020

6.2.3 50 Ω load resistor

A 50 Ω load resistor is used to match the output of the tubular wave coupler. The power rating shall be equal or greater than the applied forward power.

6.2.4 Stimulation and monitoring of the DUT

See 6.1.4.

7 Test set-up for DUT powered by an unshielded power system

7.1 Ground plane

The ground plane shall be made of 0,5 mm thick (minimum) copper, brass or galvanized steel.

The minimum width of the ground plane shall be 1 000 mm, or the width of the entire underneath of the test setup [DUT and associated equipment (e.g. harness including supply lines, load simulator located on the test bench and AN(s)), excluding battery and/or power supply] plus 200 mm, whichever is the larger.

The minimum length of the ground plane shall be:

— 1 500 mm or the length of the entire underneath of the test setup [DUT and associated equipment (e.g. harness including supply lines, load simulator located on the test bench and AN(s)), excluding battery and/or power supply] plus 200 mm, whichever is the larger for the BCI method using the closed-loop method with power limitation,

— 2 000 mm or the length of the entire underneath of the test setup [DUT and associated equipment (e.g. harness including supply lines, load simulator located on the test bench and AN(s)), excluding battery and/or power supply] plus 200 mm, whichever is the larger for all other methods defined in this document.

The height of the ground plane (test bench) shall be (900 ± 100) mm above the floor.

The ground plane shall be bonded to the shielded enclosure such that the DC resistance shall not exceed 2,5 mΩ. The distance from the edge of the ground strap to the edge of the next strap shall not be greater than 300 mm. The maximum length to width ratio for the ground straps shall be 7:1.

7.2 Power supply and AN

Each DUT power supply lead shall be connected to the power supply through an AN.

Power supply is assumed to be negative ground. If the DUT utilizes a positive ground, then the test set-ups shown in the figures need to be adapted accordingly. Power shall be applied to the DUT via 5 µH/50 Ω AN (see ISO 11452-1 for the schematic). The number of ANs required depends on the intended DUT installation in the vehicle.

— For a DUT remotely grounded (vehicle power return line longer than 200 mm), two ANs are required, one for the positive supply line and one for the power return line (see Annex C).

— For a DUT locally grounded (vehicle power return line 200 mm or shorter), one AN is required for the positive supply (see Annex C).

The AN(s) shall be mounted directly on the ground plane. The case or cases of the AN(s) shall be bonded to the ground plane.

The power supply return shall be connected to the ground plane between the power supply and the AN(s).

The measuring port of each AN shall be terminated with a 50 Ω load which is capable of dissipating the coupled RF power.

© ISO 2020 – All rights reserved
Documents
Document Sharing Hub
Full document details: BS ISO 11452-4:2020

The length of the power supply lines between the power supply and the load simulator shall be as short as possible and defined in the test plan. Unless otherwise specified, the power supply lines between the power supply and the load simulator shall be placed directly on the ground plane.

7.3 Location of the DUT

The DUT shall be placed on a non-conductive, low relative permittivity (dielectric constant) material ($\varepsilon_r \leq 1{,}4$), at (50 ± 5) mm above the metallic surface of the table.

The case of the DUT shall not be grounded to the metallic surface of the table unless it is grounded in the actual vehicle.

The face of the DUT shall be located at least 100 mm from the edge of the ground plane.

There should be a distance at least 500 mm between the DUT and any metal part such as the walls of the shielded room, with the exception of the ground plane on which the DUT is placed.

7.4 Location of the test harness

Unless otherwise specified in the test plan, the length of test harness between the DUT and the load simulator shall be:

— $\left(1\,700^{+300}_{0}\right)$ mm for all test methods defined in this document except for the BCI test method using the closed-loop method with power limitation;

— $\left(1\,000^{+200}_{0}\right)$ mm for the BCI test method using the closed-loop method with power limitation.

The wiring type is defined by the actual system application and requirement.

The wiring harness shall be straight:

— over at least 1 400 mm starting at the DUT for all test methods defined in this document except for the BCI test method using the closed-loop method with power limitation;

— over its entire length for the BCI test method using the closed-loop method with power limitation.

The wiring harness should be fixed (position and number of wires).

The wiring harness shall pass through the current injection and current measurement probes or the tubular wave coupler and shall be located parallel to the edge of the ground plane at least at 200 mm from the edge of the ground plane. The length of the wires in the load simulator should be short by comparison with the length of the harness. The wires within the load simulator should be fixed.

NOTE If all wires in the load simulator and the wiring harness have the same lengths, strong resonance effects might occur. This can be avoided by using or adding wires of different lengths in the load simulator.

The test harness (or each branch) shall be placed on a non-conductive, low relative permittivity (dielectric constant) material ($\varepsilon_r \leq 1{,}4$), with a thickness of (50 ± 5) mm.

For DUTs with multiple harness branches, the branches not included in the probe shall be placed at least 100 mm away from the branch included in the probe.

7.5 Location of the load simulator

Unless otherwise specified in the test plan, the load simulator should be placed directly on the ground plane. If the load simulator has a metallic case, this case shall be bonded to the ground plane.

Alternatively, the load simulator may be located adjacent to the ground plane (with the case of the load simulator bonded to the ground plane) or outside of the test chamber, provided the test harness from

© ISO 2020 – All rights reserved

AVA Documents Document Sharing Hub
Full document details: BS ISO 11452-4:2020

the DUT passes through an RF boundary bonded to the ground plane. The layout of the test harness that is connected to the load simulator shall be defined in the test plan and recorded in the test report.

When the load simulator is located on the ground plane, the DC power supply lines of the load simulator shall be connected through the AN(s).

7.6 Location of the harness excitation

7.6.1 BCI test method

7.6.1.1 Substitution method

The injection probe shall be placed at (150 ± 50) mm from the connector of the DUT. Additional tests at d = (450 ± 50) mm and d = (750 ± 50) mm may be required.

Distances from DUT are measured from the centre/midpoint of probes.

If a current measurement probe is used during the test, it shall be placed at (50 ± 10) mm from the connector of the DUT.

An example of a test configuration is shown in Figure 1.

7.6.1.2 Closed-loop method with power limitation

The injection probe shall be placed at (900 ± 10) mm from the connector of the DUT.

Distance from DUT is measured from the centre/midpoint of the injection probe.

The current measurement probe shall be placed at (50 ± 10) mm from the connector of the DUT.

An example of a test configuration is shown in Figure 2.

7.6.2 TWC test method

The tubular wave coupler shall be placed at (100 ± 10) mm from the DUT and isolated from the ground plane. It shall be connected to the high-frequency equipment at the port, which is closer to the DUT. The 50 Ω load resistor shall be insulated from the ground plane and placed at a minimum distance of 200 mm from the wiring harness and connected to the second port of the TWC.

Figure 3 gives an example for the test set-up.

© ISO 2020 – All rights reserved
Documents
Document Sharing Hub
Full document details: BS ISO 11452-4:2020

Dimensions in millimetres

Top view

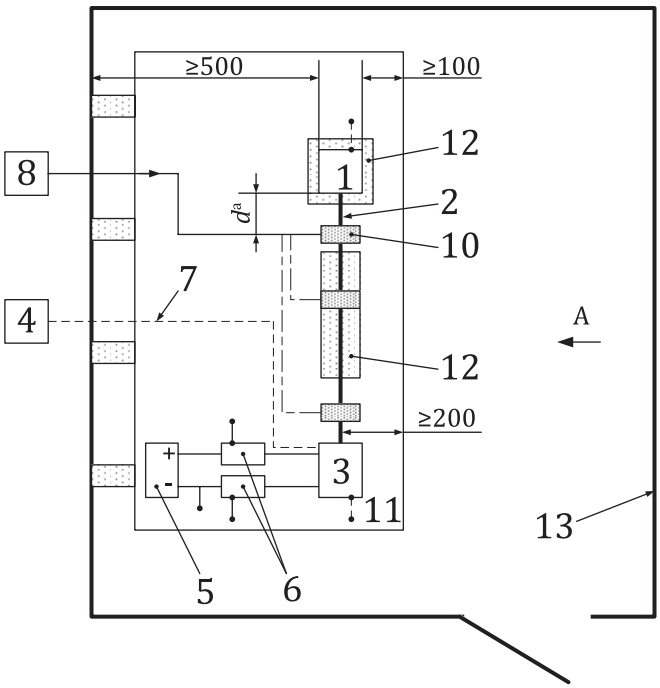

A

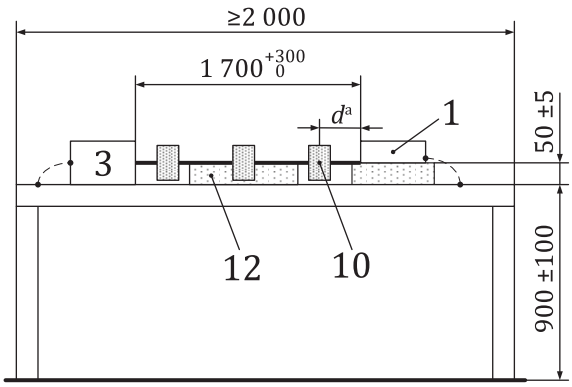

Side view

Key

1 DUT (grounded locally if required in test plan)

2 test harness

3 load simulator (placement and ground connection according to 7.5)

4 stimulation and monitoring system

5 power supply

6 AN

7 optical fibres

8 high frequency equipment (generator, amplifier and measuring instruments)

9 optional current measurement probe (not shown in this figure, but shown in Figure 2)

10 injection probe (represented at 3 positions)

11 ground plane (bonded to shielded enclosure)

12 low relative permittivity support ($\varepsilon_r \leq 1{,}4$)

13 shielded enclosure

[a] See 7.6.1.1.

Figure 1 — BCI configuration — Substitution method

© ISO 2020 – All rights reserved

Documents
Document Sharing Hub
Full document details: BS ISO 11452-4:2020

Dimensions in millimetres

Top view

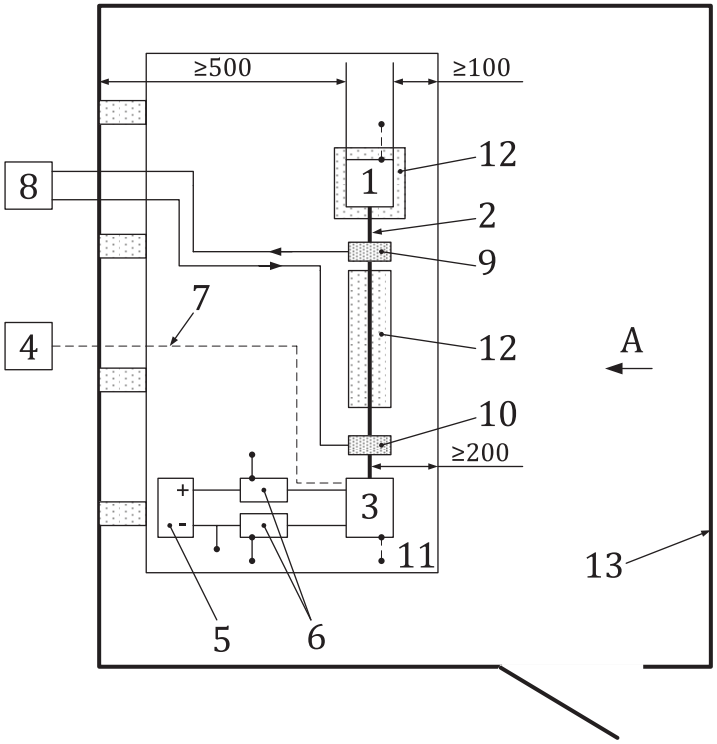

A

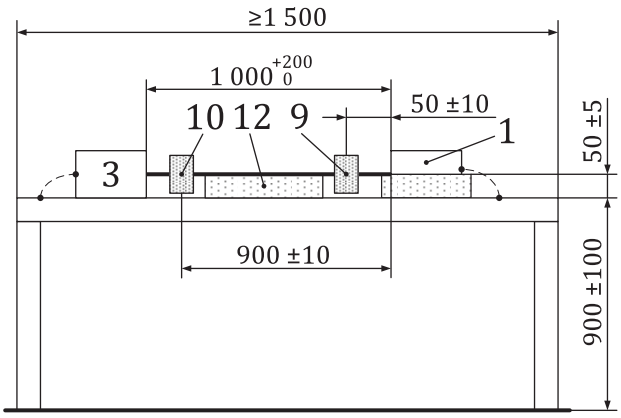

Side view

Key

1 DUT (grounded locally if required in test plan)

2 test harness

3 load simulator (placement and ground connection according to 7.5)

4 stimulation and monitoring system

5 power supply

6 AN

7 optical fibres

8 high frequency equipment (generator, amplifier and measuring instruments)

9 current measurement probe

10 injection probe

11 ground plane (bonded-to shielded enclosure)

12 low relative permittivity support ($\varepsilon_r \leq 1{,}4$)

13 shielded enclosure

Figure 2 — BCI configuration — Closed-loop method with power limitation

© ISO 2020 – All rights reserved

Documents
Document Sharing Hub

Full document details: BS ISO 11452-4:2020

Dimensions in millimetres

Top view

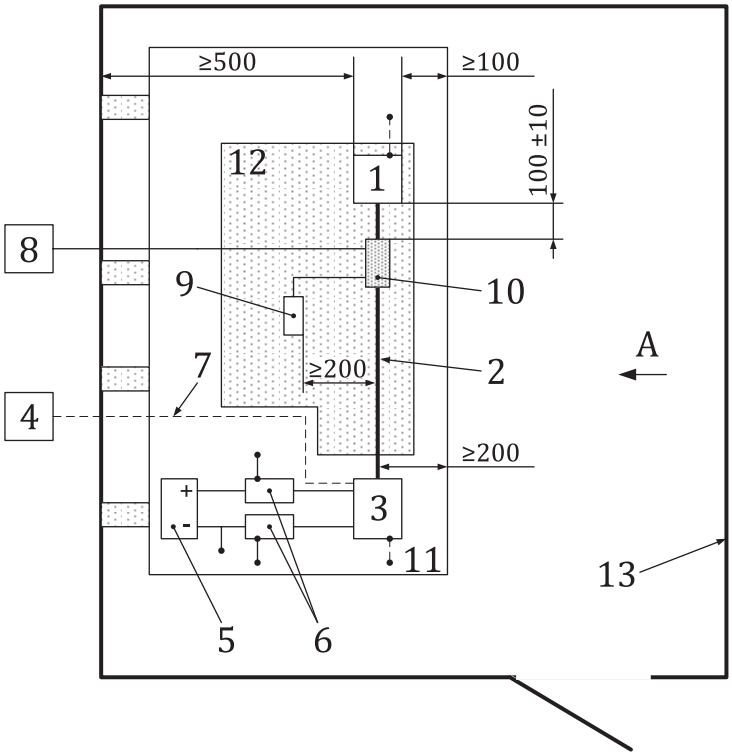

A

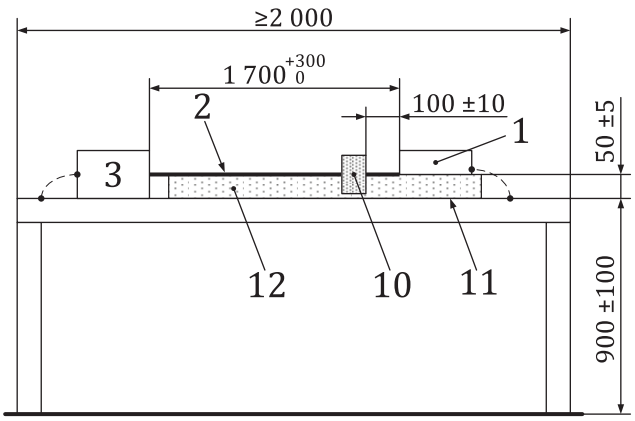

Side view

Key

1 DUT (grounded locally if required in test plan)

2 test harness

3 load simulator (placement and ground connection according to 7.5)

4 stimulation and monitoring system

5 power supply

6 AN

7 optical fibres

8 high frequency equipment (generator, amplifier and measuring instruments)

9 50 Ω load

10 tubular wave coupler

11 ground plane (bonded-to shielded enclosure)

12 low relative permittivity support ($\varepsilon_r \leq 1{,}4$)

13 shielded enclosure

Figure 3 — Tubular wave coupler test set-up

© ISO 2020 – All rights reserved

Documents
Document Sharing Hub
Full document details: BS ISO 11452-4:2020

8 Test setup for DUT powered by a shielded power system

8.1 Ground plane

The ground plane conditions defined in 7.1 apply.

8.2 Power supply and AN, HV-AN, AMN and AAN

Each DUT power supply lead shall be connected to the power supply through an HV-AN (for DUT with DC HV supply) and/or AMN (for DUT with AC supply).

— DC HV supply shall be applied to the DUT via a 5 µH/50 Ω HV-AN (see ISO 11452-1 for the schematic).

— AC supply shall be applied to the DUT via a 50 µH/50 Ω AMN (see ISO 11452-1 for the schematic).

The HV-AN(s) shall be mounted directly on the ground plane. The case or cases of the HV-AN(s) shall be bonded to the ground plane.

The measuring port of each HV-AN(s) shall be terminated with a 50 Ω load.

The vehicle HV battery should be used; otherwise the external HV power supply shall be connected via feed-through-filtering.

Shielded supply lines for the positive HV DC terminal line (HV+), the negative HV DC terminal line (HV–) and three phase AC lines may be separate coaxial cables or in a common shield depending on the connector system used.

The shielded harnesses used for this test shall be representative of the vehicle application in terms of cable construction and connector termination as defined in the test plan.

Care should be taken when using a power line filter (Key 16) on the HV supply line. This filter will increase the common mode capacitance between HV+ and ground reference or HV- and ground reference and may lead to the generation of extra resonances.

For charger, the AMN(s) shall be mounted on the ground plane. The case or cases of the AMN(s) shall be bonded to the ground plane. The charger PE (protective earth) line shall be bounded to the ground plane and to the AMN(s) PE connection.

For charger/inverter with communication, AAN (see ISO 11452-1 for the schematic) may be inserted in the communication line between the charger/inverter and the communication interface.

The measuring port of each AAN(s) shall be terminated with a 50 Ω load.

The measuring port of each HV-AN(s) / AMN(s) shall be terminated with a 50 Ω load.

8.3 Location of DUT

Unless otherwise specified, the DUT shall be placed directly on the ground plane with the DUT case bonded to the ground plane either directly or via defined impedance.

The face of the DUT shall be located at least 100 mm from the edge of the ground plane.

There should be a distance at least 500 mm between the DUT and any metal part such as the walls of the shielded room, with the exception of the ground straps and of the ground plane on which the DUT is placed.

In case of a charger, the battery charger case shall be bonded to the ground plane.

© ISO 2020 – All rights reserved
Documents
Document Sharing Hub
Full document details: BS ISO 11452-4:2020