BS ISO 11452-9:2012

BSI Standards Publication

Road vehicles — Component test methods for electrical disturbances from narrowband radiated electromagnetic energy

Part 9: Portable transmitters

NO COPYING WITHOUT BSI PERMISSION EXCEPT AS PERMITTED BY COPYRIGHT LAW

raising standards worldwide™

Full document details: BS ISO 11452-9:2012

National foreword

This British Standard is the UK implementation of ISO 11452-9:2012.

The UK participation in its preparation was entrusted to Technical Committee AUE/16, Electrical and electronic equipment.

A list of organizations represented on this committee can be obtained on request to its secretary.

This publication does not purport to include all the necessary provisions of a contract. Users are responsible for its correct application.

© The British Standards Institution 2012. Published by BSI Standards Limited 2012

ISBN 978 0 580 58062 8

ICS 33.100.20; 43.040.10

Compliance with a British Standard cannot confer immunity from legal obligations.

This British Standard was published under the authority of the Standards Policy and Strategy Committee on 31 May 2012.

Amendments issued since publication

Date	Text affected

Documents
Document Sharing Hub

Full document details: BS ISO 11452-9:2012

INTERNATIONAL STANDARD

ISO 11452-9

First edition
2012-05-15

Road vehicles — Component test methods for electrical disturbances from narrowband radiated electromagnetic energy —

Part 9: Portable transmitters

Véhicules routiers — Méthodes d'essai d'un équipement soumis à des perturbations électriques par rayonnement d'énergie électromagnétique en bande étroite —

Partie 9: Émetteurs portables

Reference number
ISO 11452-9:2012(E)

Documents
Document Sharing Hub
© ISO 2012

Full document details: BS ISO 11452-9:2012

COPYRIGHT PROTECTED DOCUMENT

© ISO 2012

All rights reserved. Unless otherwise specified, no part of this publication may be reproduced or utilized in any form or by any means, electronic or mechanical, including photocopying and microfilm, without permission in writing from either ISO at the address below or ISO's member body in the country of the requester.

ISO copyright office
Case postale 56 • CH-1211 Geneva 20
Tel. + 41 22 749 01 11
Fax + 41 22 749 09 47
E-mail copyright@iso.org
Web www.iso.org

Published in Switzerland

Documents
Document Sharing Hub
© ISO 2012 – All rights reserved

Full document details: BS ISO 11452-9:2012

Contents

Page

Foreword ... iv

Introduction ... v

1 Scope ... 1

2 Normative references ... 1

3 Terms and definitions ... 1

4 Test conditions ... 1

5 Test location ... 2

6 Test instrumentation ... 2
6.1 General ... 2
6.2 Commercial portable transmitters ... 2
6.3 Simulated portable transmitters ... 2
6.4 Stimulation and monitoring of the DUT ... 3

7 Test set-up ... 3
7.1 Ground plane ... 3
7.2 Power supply and artificial networks ... 3
7.3 Location of the DUT ... 4
7.4 Location of the test harness ... 4
7.5 Location of the load simulator ... 4

8 Tests ... 6
8.1 General ... 6
8.2 Test plan ... 6
8.3 Test methods ... 7
8.4 Test report ... 10

Annex A (informative) **Typical characteristics of portable transmitters** ... 11

Annex B (informative) **Examples of simulated portable transmitter antennas** ... 13

Annex C (informative) **Example of test severity levels associated with function performance status classification** ... 45

Annex D (informative) **Remote/local grounding** ... 46

© ISO 2012 – All rights reserved

Documents
Document Sharing Hub

Full document details: BS ISO 11452-9:2012

Foreword

ISO (the International Organization for Standardization) is a worldwide federation of national standards bodies (ISO member bodies). The work of preparing International Standards is normally carried out through ISO technical committees. Each member body interested in a subject for which a technical committee has been established has the right to be represented on that committee. International organizations, governmental and non-governmental, in liaison with ISO, also take part in the work. ISO collaborates closely with the International Electrotechnical Commission (IEC) on all matters of electrotechnical standardization.

International Standards are drafted in accordance with the rules given in the ISO/IEC Directives, Part 2.

The main task of technical committees is to prepare International Standards. Draft International Standards adopted by the technical committees are circulated to the member bodies for voting. Publication as an International Standard requires approval by at least 75 % of the member bodies casting a vote.

Attention is drawn to the possibility that some of the elements of this document may be the subject of patent rights. ISO shall not be held responsible for identifying any or all such patent rights.

ISO 11452-9 was prepared by Technical Committee ISO/TC 22, *Road vehicles*, Subcommittee SC 3, *Electrical and electronic equipment*.

ISO 11452 consists of the following parts, under the general title *Road vehicles — Component test methods for electrical disturbances from narrowband radiated electromagnetic energy*:

— *Part 1: General principles and terminology*

— *Part 2: Absorber-lined shielded enclosure*

— *Part 3: Transverse electromagnetic mode (TEM) cell*

— *Part 4: Harness excitation methods*

— *Part 5: Stripline*

— *Part 7: Direct radio frequency (RF) power injection*

— *Part 8: Immunity to magnetic fields*

— *Part 9: Portable transmitters*

— *Part 10: Immunity to conducted disturbances in the extended audio frequency range*

— *Part 11: Reverberation chamber*

© ISO 2012 – All rights reserved
Documents
Document Sharing Hub
Full document details: BS ISO 11452-9:2012

Introduction

Immunity measurements of complete road vehicles can generally only be carried out by the vehicle manufacturer, owing to, for example, high costs of absorber-lined shielded enclosures, the desire to preserve the secrecy of prototypes or a large number of different vehicle models.

For research, development and quality control, a laboratory measuring method can be used by both vehicle manufacturers and equipment suppliers to test electronic components.

© ISO 2012 – All rights reserved

Documents
Document Sharing Hub
Full document details: BS ISO 11452-9:2012

Documents
Document Sharing Hub

INTERNATIONAL STANDARD ISO 11452-9:2012(E)

Road vehicles — Component test methods for electrical disturbances from narrowband radiated electromagnetic energy —

Part 9: Portable transmitters

1 Scope

This part of ISO 11452 specifies test methods and procedures for testing electromagnetic immunity to portable transmitters of electronic components for passenger cars and commercial vehicles, regardless of the propulsion system (e.g. spark-ignition engine, diesel engine, electric motor). The device under test (DUT), together with the wiring harness (prototype or standard test harness), is subjected to an electromagnetic disturbance generated by portable transmitters inside an absorber-lined shielded enclosure, with peripheral devices either inside or outside the enclosure. The electromagnetic disturbances considered are limited to continuous narrowband electromagnetic fields.

2 Normative references

The following referenced documents are indispensable for the application of this document. For dated references, only the edition cited applies. For undated references, the latest edition of the referenced document (including any amendments) applies.

ISO 11452-1, *Road vehicles — Component test methods for electrical disturbances from narrowband radiated electromagnetic energy — Part 1: General principles and terminology*

Guidelines for Limiting Exposure to Time-Varying Electric, Magnetic, and Electromagnetic Fields (up to 300 GHz). International Commission on Non-Ionizing Radiation Protection (ICNIRP)

3 Terms and definitions

For the purposes of this document, the terms and definitions given in ISO 11452-1 apply.

4 Test conditions

The applicable frequency range of the test method is 26 MHz to 5,85 GHz.

The user of this International Standard shall specify the test severity level or levels over the frequency bands. The test severity level shall take into account

— typical portable transmitter characteristics (frequency bands, power level and modulation), given in Annex A, and

— the characteristics of the antenna(s) used for this test.

NOTE Users of this International Standard are advised that Annex A is for information only and cannot be considered as an exhaustive description of various portable transmitters available in all countries.

Standard test conditions are given in ISO 11452-1 for the following:

— test temperature;

— supply voltage;

© ISO 2012 – All rights reserved

Documents
Document Sharing Hub
Full document details: BS ISO 11452-9:2012

— dwell time;

— test signal quality.

5 Test location

The purpose of such an enclosure is to create an isolated electromagnetic compatibility test facility which simulates open field testing. Basically, an absorber-lined shielded enclosure consists of a shielded room with absorbing material on its internal reflective surfaces, optionally excluding the floor. The design objective is to attenuate the reflected energy in the test area by at least 10 dB compared with the direct energy.

6 Test instrumentation

6.1 General

The field-generating device can be

— commercial portable transmitters with integral antennas, or

— simulated portable transmitters, with an antenna used as described in 6.3.4 and an amplifier.

To reduce test error, the operation of the DUT is usually monitored by fibre-optic couplers.

Test personnel shall be protected in accordance with ICNIRP Guidelines.

NOTE National or other regulations can apply.

6.2 Commercial portable transmitters

Commercial portable transmitters having an integral antenna are a convenient and readily available field-generating device.

6.3 Simulated portable transmitters

6.3.1 General

Simulated portable transmitters consist of

— radio frequency (RF) signal generating equipment, and

— RF power monitoring equipment and antennas.

6.3.2 RF signal generating equipment

Signal sources with internal or external modulation capability.

Power amplifier(s): multiple RF amplifiers may be required to cover the range of test frequencies.

6.3.3 RF power monitoring equipment

An in-line power meter is required when using simulated portable transmitters for measuring power to the antenna. Both forward and reverse power shall be measured and recorded.

6.3.4 Antennas

Unless otherwise specified, the simulated portable transmitter antenna characteristics shall be a passive antenna as detailed in B.2. Examples of other antennas which may be used are presented in Annex B.

© ISO 2012 – All rights reserved
Documents
Document Sharing Hub
Full document details: BS ISO 11452-9:2012

All antennas should be tuned for a minimum voltage standing wave ratio (VSWR) of typically less than 4:1 unless otherwise specified in the test plan. The resulting VSWR has to be compatible with the design of the RF source. As a minimum, the VSWR value shall be recorded at the lower and upper band edges and at middle frequency.

6.4 Stimulation and monitoring of the DUT

The DUT shall be operated in accordance with the test plan by actuators which have a minimum effect on the electromagnetic characteristics.

EXAMPLE Plastic blocks on the push-buttons, pneumatic actuators with plastic tubes.

Connections to equipment monitoring electromagnetic interference reactions of the DUT may be accomplished by using fibre-optics or high-resistance leads. Other types of leads may be used but require extreme care to minimize interactions. The orientation, length and location of such leads shall be carefully documented to ensure repeatability of test results.

CAUTION — Any electrical connection of monitoring equipment to the DUT could cause malfunctions of the DUT. Extreme care shall be taken to avoid such an effect.

7 Test set-up

7.1 Ground plane

7.1.1 General

The ground plane shall be made of 0,5 mm thick (minimum) copper, brass or galvanized steel.

The minimum width of the ground plane shall be 1 000 mm. The minimum length of the ground plane shall be 2 000 mm, or the underneath of the entire equipment plus 200 mm, whichever is larger.

The height of the ground plane (test bench) shall be (900 ± 100) mm above the floor.

The ground plane shall be bonded to the shielded enclosure such that the DC resistance does not exceed 2,5 mΩ. In addition, the bond straps shall be placed no greater than 0,3 m apart.

7.2 Power supply and artificial networks

Each DUT power supply lead shall be connected to the power supply through an artificial network (AN).

Power supply is assumed to be negative ground. If the DUT utilizes positive ground then the test set-up shown in Figures D.1 and D.2 need to be adapted accordingly. Power shall be applied to the DUT via a 5 μH/50 Ω AN. Whether two ANs or only one is required depends on the intended DUT installation in the vehicle:

— for remotely grounded DUTs (vehicle power return line longer than 200 mm), two ANs are required — one for the positive supply line and the other for the power return line (see Annex D);

— for locally grounded DUTs (vehicle power return line 200 mm or shorter), only one AN is required, for the positive supply (see Annex D).

The AN(s) shall be mounted directly on the ground plane. AN cases shall be bonded to the ground plane.

The power supply return shall be connected to the ground plane, between the power supply and the AN(s).

The measuring port of each AN shall be terminated with a 50 Ω load.

© ISO 2012 – All rights reserved

Documents
Document Sharing Hub
Full document details: BS ISO 11452-9:2012

7.3 Location of the DUT

The DUT shall be placed on non-conductive material of low relative permittivity (dielectric constant) ($\varepsilon_r \leq 1{,}4$) at (50 ± 5) mm above the ground plane.

The case of the DUT shall not be grounded to the ground plane unless it is intended to simulate the actual vehicle configuration.

The face of the DUT shall be located at least 100 mm from the edge of the ground plane.

7.4 Location of the test harness

The total length of the test harness between the DUT and the load simulator (or RF boundary) shall be 1700^{+300}_{0} mm unless otherwise specified in the test plan. The wiring type is defined by the actual system application and requirement.

The test harness shall be placed on non-conductive material of low relative permittivity (dielectric constant) ($\varepsilon_r \leq 1{,}4$) at (50 ± 5) mm above the ground plane.

The test harness shall be located at least 200 mm from the edge of the ground plane.

7.5 Location of the load simulator

The load simulator shall be placed directly on the ground plane. If the load simulator has a metallic case, this case shall be bonded to the ground plane.

The load simulator may be located adjacent to the ground plane, with the case of the load simulator bonded to the ground plane, or outside the test chamber, provided the test harness from the DUT passes through an RF boundary bonded to the ground plane.

When the load simulator is located on the ground plane, the DC power supply lines of the load simulator shall be connected through the AN(s).

© ISO 2012 – All rights reserved
Documents
Document Sharing Hub
Full document details: BS ISO 11452-9:2012

Dimensions in millimetres

Upper view

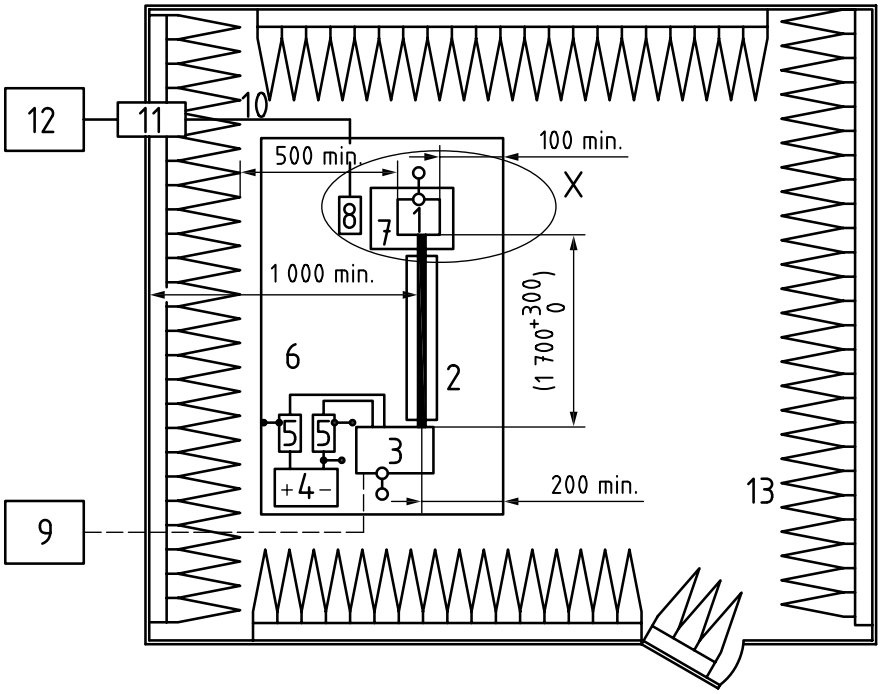

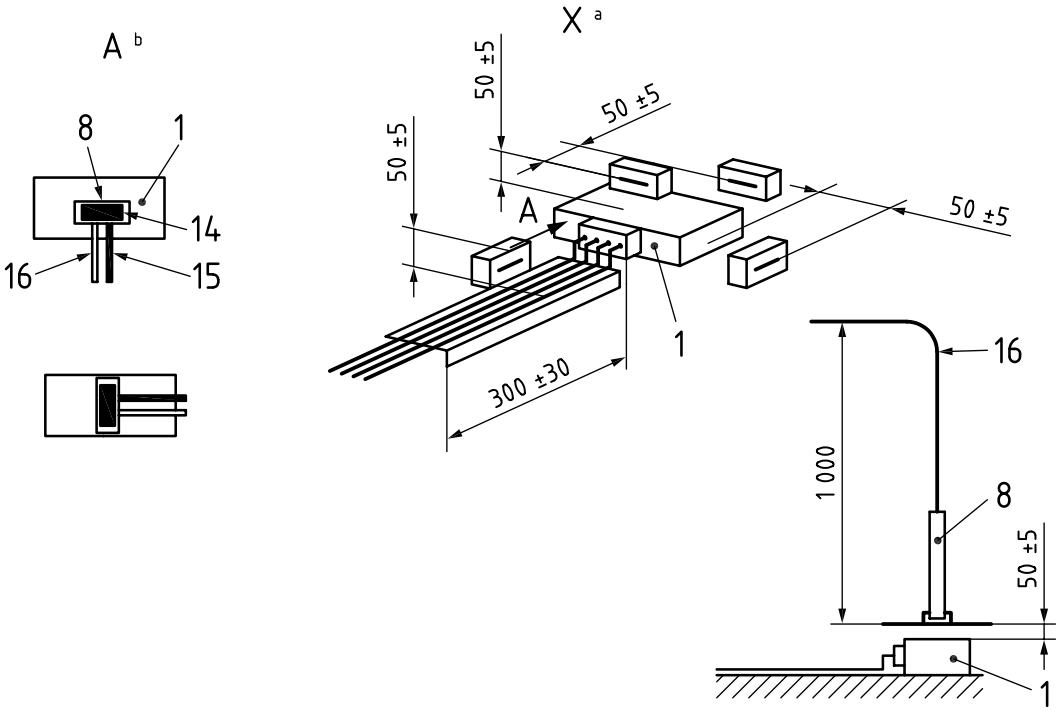

© ISO 2012 – All rights reserved

Documents
Document Sharing Hub
Full document details: BS ISO 11452-9:2012

Key

1 DUT (grounded locally if required in test plan)
2 test harness
3 load simulator (placement and ground connection according to 7.5)
4 power supply (location optional)
5 artificial network (AN)
6 ground plane (bonded to shielded enclosure)
7 low relative permittivity support ($\varepsilon_r \leq 1{,}4$)
8 simulated portable transmitter antenna or commercial transmitter
9 stimulation and monitoring system
10 high-quality double-shielded coaxial cable (50 Ω)
11 bulkhead connector
12 RF signal generator, amplifier, directional coupler and power meter for the simulated portable transmitter
13 RF absorber material
14 dipole axis or patch plane
15 insulating support
16 coaxial cable

[a] View A: simulated portable transmitter position for different polarizations.
[b] View X: simulated portable transmitter positions (DUT and harness).

Figure 1 — Example of test set-up

8 Tests

8.1 General

The general arrangement of the disturbance source and connecting harnesses represents a standardized test condition. Any deviations from this International Standard shall be agreed upon prior to testing.

The DUT load simulator shall be designed to simulate typical loading as in the vehicle. The DUT shall be tested under the most significant conditions, e.g. in stand-by mode and in a mode by which all the actuators can be excited. These operating conditions shall be clearly defined in the test plan to ensure supplier and customer perform identical tests.

8.2 Test plan

Prior to performing the tests, a test plan shall be generated which includes

— test set-up,

— frequency range,

— DUT mode of operation,

— DUT acceptance criteria,

— test severity levels,

— DUT monitoring conditions,

— DUT exposure methodology,

— simulated portable transmitter antenna or commercial transmitter location,

— test report content, and

— any special instructions and changes from the standard test.

© ISO 2012 – All rights reserved
Documents
Document Sharing Hub
Full document details: BS ISO 11452-9:2012

8.3 Test methods

8.3.1 General

CAUTION — Hazardous voltages and fields can exist within the test area. Ensure that all requirements for limiting the exposure of humans to RF energy are met.

The reference parameter for the test is the net power at the simulated portable transmitter antenna feed point. Typical power values are given in Annex A.

NOTE The adjustment of the net power can be made according to ISO 11451-3:2001, Annex B.

8.3.2 Simulated portable transmitter test method

8.3.2.1 General

This method is performed in two phases:

— test level setting;

— testing of the DUT with wiring harness and peripheral devices connected.

8.3.2.2 Test level setting

The adjustment of the net power level shall be performed in continuous wave (CW), with the simulated portable transmitter antenna placed at a minimum distance of 1 m from any part of the DUT, from the ground plane and from the test enclosure, and 0,5 m from any absorber, until the predetermined level is achieved.

Record the net power level and the forward power level.

NOTE If a PEP (peak envelope power) meter is used, the modulated signal can be used during the power adjustment.

8.3.2.3 DUT test

There are two alternative ways, either of which may be used, to expose the DUT after the test level setting phase:

a) approach the simulated portable transmitter at the various positions indicated in the test plan without switching off the power of the simulated portable transmitter;

b) switch off the power of the simulated portable transmitter, approach the simulated portable transmitter at the various positions indicated in the test plan, then switch on the power of the simulated portable transmitter.

The test on the DUT shall be performed at the various positions indicated in the test plan (antenna positioning for coupling to the DUT and harness are defined in 8.3.4 and 8.3.5), with CW and/or modulated signals as indicated in Annex A.

The test on the DUT shall be performed without any change in the forward power level recorded during the determination of the net power (test level setting).

For amplitude modulation (AM) and pulse modulation (PM) signals, the test on the DUT shall be performed with power level adjustment, in order to fulfil the peak conservation principle given in ISO 11452-1. The power adjustments shall be performed in the same condition of simulated portable transmitter location as described for test level setting.

NOTE Due to the position of the simulated portable transmitter antenna close to the DUT, variations in transmitter net power can occur. If a variation of net power occurs, readjustment of net power is not required.

If manual positioning of the antenna is required while the RF power is switched on, then care shall be taken, according to ICNIRP Guidelines, to minimize the exposure of the operator to the generated field. It is

© ISO 2012 – All rights reserved

Documents
Document Sharing Hub
Full document details: BS ISO 11452-9:2012

recommended that a minimum distance of 0,5 m from the operator to the simulated portable transmitter be maintained in order to limit operator influence.

NOTE National or other regulations can apply.

Perform the test at frequencies within the designed bandwidth of the test antenna — at least at the lower and upper band edges, at middle frequency and at frequency steps not greater than those defined in ISO 11452-1.

Continue testing until all frequency bands, modulations, polarizations and simulated portable transmitter locations specified in the test plan are completed.

8.3.3 Commercial portable transmitter test method

This method uses a single phase of the test of the DUT with wiring harness and peripheral devices connected.

The test shall be performed with unmodified commercial portable transmitter characteristics (power, modulation). Any exception to this practice shall be specified in the test plan.

NOTE In general, the output power for commercial portable transmitters considered for this test is the declared value of rated power.

In accordance with the test plan, activate the commercial portable transmitter and place it at the various defined positions (antenna positioning for coupling to the DUT and harness are defined in 8.3.4 and 8.3.5).

Continue until testing of all transmitter(s) specified in the test plan has been completed.

8.3.4 Antenna positioning for coupling to DUT

8.3.4.1 Testing with broadband antennas

The usable test area of the broadband antenna described in B.2 is 100 × 100 mm when testing at a separation of 50 mm from the DUT to the antenna. It is therefore necessary to move the antenna in steps of 100 mm.

All surfaces of the DUT which are to be tested shall be partitioned to square cells of 100 × 100 mm. The antenna shall be placed at a distance of 50 mm and the centre of each cell shall be exposed to the centre and the elements of the antenna in two orthogonal orientations (four exposures in total). It is necessary to expose each cell to the centre of the elements of the antenna because the E and H fields are in different places and move with the test frequency.

a) Place the antenna parallel with the DUT harness and aligned with the centre of the first cell and expose the DUT to the stress levels given in the test plan.

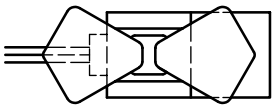

b) Repeat step a) with the antenna rotated 90°.

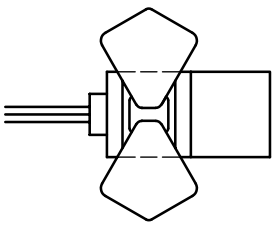

c) Align the antenna with the centre of the next cell and repeat steps a) and b) until all the cells have been exposed to two orthogonal orientations of the antenna.

© ISO 2012 – All rights reserved
Documents
Document Sharing Hub
Full document details: BS ISO 11452-9:2012

d) Move the antenna back to the first cell. Align the antenna element in the centre of the test cell (edges of the element aligned with the centre of the cell) and expose the DUT to the stress levels given in the test plan.

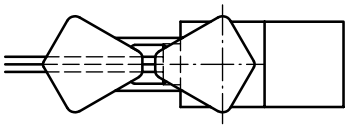

e) Repeat step d) with the antenna rotated 90°.

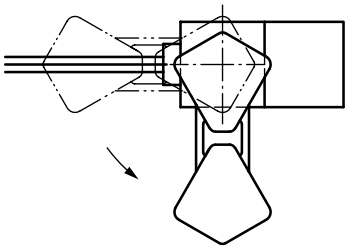

f) Repeat steps d) and e) until all cells have been exposed. When testing DUTs with multiple cells, some cells will be exposed to the elements of the antenna when steps a) to c) are performed on an adjacent cell. If this happens, and duplicate testing would result, it is not necessary to carry out steps d) and e). However, if there is any doubt over the effective exposure of cells to the elements of the antenna, steps d) and e) shall nevertheless be repeated.

g) Repeat steps a) to f) for each DUT surface defined in the test plan for electromagnetic compatibility (EMC). Testing requires rotation of the DUT such that the surface to be tested is parallel to the ground plane. Material of low permittivity shall be used to support the DUT so that the surface under test is facing upwards, towards the antenna.

8.3.4.2 Testing with other antennas

For each surface of the DUT, place the antenna with its centre at a distance of 50 mm from the DUT's surface (see Figure 1).The axis of the monopole, dipole, sleeve or plane of the patch antenna shall be parallel to the surface of the DUT.

The placement of the portable transmitters — at specific position(s) or scanning along the DUT — should be defined in the test plan. Move the portable transmitter along the surface for two orientations (polarizations) of the antenna, parallel to the surface of the DUT.

8.3.5 Antenna positioning for coupling to harness

8.3.5.1 Testing with broadband antennas

Position the antenna central to the connector under test and parallel to the harness. Align the centre of the antenna with the outermost edge of the DUT connector. Expose the DUT to the test signals specified in the test plan. In cases where the DUT has multiple connectors or connectors that are wider than 100 mm, the test shall be repeated multiple times.

Place the antenna with its centre at a distance of 50 mm from the harness.

Carry out the test by moving the portable transmitter along the harness, in 100 mm increments, for a length of 300 mm, starting at the DUT connector.

© ISO 2012 – All rights reserved

Documents
Document Sharing Hub
Full document details: BS ISO 11452-9:2012

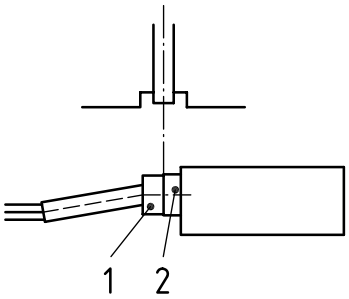

Side view

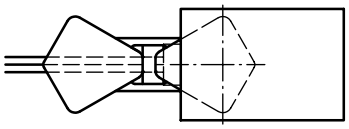

Plan view

8.3.5.2 Testing with other antennas

Place the antenna with its centre at a distance of 50 mm from the harness.

The axis of the antenna shall be parallel to the harness; for a patch antenna, ensure that the polarization of the antenna is parallel to the harness. Alternatively, if the polarization is unknown, perform tests for both polarizations.

Carry out the test by moving the portable transmitter along the harness, in 100 mm increments, for a length of 300 mm, starting at the DUT connector.

8.4 Test report

According to the test plan, a test report shall be submitted detailing information regarding the test equipment, test area, systems tested, frequencies, test modulation, power levels, DUT exposure methodology, the portable transmitter used, VSWR values (except for commercial transmitters), system interactions and any other relevant information regarding testing.

© ISO 2012 – All rights reserved
Documents
Document Sharing Hub
Full document details: BS ISO 11452-9:2012