BS ISO 11783-2:2012

Incorporating corrigendum November 2012

BSI Standards Publication

Tractors and machinery for agriculture and forestry — Serial control and communications data network

Part 2: Physical layer

bsi.

...making excellence a habit.™

Document Sharing Hub

Full document details: BS ISO 11783-2:2012

National foreword

This British Standard is the UK implementation of ISO 11783-2:2012, incorporating corrigendum November 2012. It supersedes BS ISO 11783-2:2002, which is withdrawn.

The UK participation in its preparation was entrusted to Technical Committee AGE/6, Agricultural tractors and forestry machinery.

A list of organizations represented on this committee can be obtained on request to its secretary.

This publication does not purport to include all the necessary provisions of a contract. Users are responsible for its correct application.

© The British Standards Institution 2013.
Published by BSI Standards Limited 2013

ISBN 978 0 580 81328 3

ICS 35.100.10; 35.240.99; 65.060.01

Compliance with a British Standard cannot confer immunity from legal obligations.

This British Standard was published under the authority of the Standards Policy and Strategy Committee on 31 March 2012.

Amendments/corrigenda issued since publication

Date	Text affected
30 April 2013	Implementation of ISO corrigendum November 2012: Tables 1 and 3 updated

Documents
Document Sharing Hub

Full document details: BS ISO 11783-2:2012

INTERNATIONAL STANDARD

ISO 11783-2

Second edition
2012-03-01

Tractors and machinery for agriculture and forestry — Serial control and communications data network —

Part 2: Physical layer

Tracteurs et matériels agricoles et forestiers — Réseaux de commande et de communication de données en série —

Partie 2: Couche physique

Reference number
ISO 11783-2:2012(E)

Documents
Document Sharing Hub

© ISO 2012

Full document details: BS ISO 11783-2:2012

COPYRIGHT PROTECTED DOCUMENT

© ISO 2012

All rights reserved. Unless otherwise specified, no part of this publication may be reproduced or utilized in any form or by any means, electronic or mechanical, including photocopying and microfilm, without permission in writing from either ISO at the address below or ISO's member body in the country of the requester.

ISO copyright office
Case postale 56 • CH-1211 Geneva 20
Tel. + 41 22 749 01 11
Fax + 41 22 749 09 47
E-mail copyright@iso.org
Web www.iso.org

Published in Switzerland

© ISO 2012 – All rights reserved

Documents
Document Sharing Hub

Full document details: BS ISO 11783-2:2012

Contents

Page

Foreword v
Introduction vi
1 Scope 1
2 Normative references 1
3 Terms and definitions 1
4 General description 1
4.1 Network physical layer 1
4.2 Physical media 1
4.3 Differential voltage 2
4.4 Bus 2
4.4.1 Levels 2
4.4.2 Voltage range 2
4.4.3 Termination 2
4.5 Resistance and capacitance 3
4.5.1 Internal resistance (R_{in}), capacitance (C_{in}) 3
4.5.2 Differential internal resistance (R_{diff}), capacitance (C_{diff}) 4
4.6 Bit time 5
4.7 AC parameters 5
5 Functional description 6
6 Electrical specifications 7
6.1 Electrical data 7
6.1.1 General 7
6.1.2 Absolute maximum ratings 7
6.1.3 DC parameters 7
6.1.4 Bus voltages (operational) 9
6.1.5 Electrostatic discharge (ESD) 9
6.2 Physical media parameters 9
6.2.1 Twisted quad cable 9
6.2.2 Topology 10
6.2.3 ECU connection to TBC_PWR and TBC_RTN 11
6.2.4 Power For TBC_PWR and TBC_RTN 11
6.3 TBC parameters 12
6.4 Connectors 13
6.4.1 General 13
6.4.2 Bus extension connector 14
6.4.3 Implement bus breakaway connector 16
6.4.4 In-cab connector 21
6.4.5 Diagnostic connector 24
7 Conformance tests 29
7.1 General requirements 29
7.2 Internal resistance 29
7.3 Internal differential resistance 30
7.4 ECU recessive input threshold 30
7.5 ECU dominant input threshold 31
7.6 ECU dominant output 31
7.7 ECU internal delay time 32
8 Bus failure and fault confinement 33
8.1 General 33

Documents
Document Sharing Hub

© ISO 2012 – All rights reserved

Full document details: BS ISO 11783-2:2012

8.2 Loss of network connection **33**
8.3 Node power or ground loss **33**
8.4 Open and short failures **33**

Annex A (informative) **Protocol controller timing and naming** **37**

Annex B (informative) **Examples of physical layer circuits** **41**

Bibliography **50**

© ISO 2012 – All rights reserved

Documents
Document Sharing Hub
Full document details: BS ISO 11783-2:2012

Foreword

ISO (the International Organization for Standardization) is a worldwide federation of national standards bodies (ISO member bodies). The work of preparing International Standards is normally carried out through ISO technical committees. Each member body interested in a subject for which a technical committee has been established has the right to be represented on that committee. International organizations, governmental and non-governmental, in liaison with ISO, also take part in the work. ISO collaborates closely with the International Electrotechnical Commission (IEC) on all matters of electrotechnical standardization.

International Standards are drafted in accordance with the rules given in the ISO/IEC Directives, Part 2.

The main task of technical committees is to prepare International Standards. Draft International Standards adopted by the technical committees are circulated to the member bodies for voting. Publication as an International Standard requires approval by at least 75 % of the member bodies casting a vote.

ISO 11783-2 was prepared by Technical Committee ISO/TC 23, *Tractors and machinery for agriculture and forestry*, Subcommittee SC 19, *Agricultural electronics*.

This second edition cancels and replaces the first edition (ISO 11783-2:2002), which has been technically revised. It also incorporates the Amendment ISO 11783-2:2002/Amd.1:2006 and the Technical Corrigendum ISO 11783-2:2002/Cor.1:2003.

ISO 11783 consists of the following parts, under the general title *Tractors and machinery for agriculture and forestry — Serial control and communications data network*:

— *Part 1: General standard for mobile data communication*

— *Part 2: Physical layer*

— *Part 3: Data link layer*

— *Part 4: Network layer*

— *Part 5: Network management*

— *Part 6: Virtual terminal*

— *Part 7: Implement messages application layer*

— *Part 8: Power train messages*

— *Part 9: Tractor ECU*

— *Part 10: Task controller and management information system data interchange*

— *Part 11: Mobile data element dictionary*

— *Part 12: Diagnostics services*

— *Part 13: File server*

— *Part 14: Sequence control*

© ISO 2012 – All rights reserved

Documents
Document Sharing Hub
Full document details: BS ISO 11783-2:2012

Introduction

Parts 1 to 14 of ISO 11783 specify a communications system for agricultural equipment based on ISO 11898-1[4] and ISO 11898-2[5]. SAE J1939[8] documents, on which parts of ISO 11783 are based, were developed jointly for use in truck and bus applications and for construction and agriculture applications. Joint documents were completed to allow electronic units that meet the truck and bus SAE J1939 specifications to be used by agricultural and forestry equipment with minimal changes. General information on ISO 11783 is to be found in ISO 11783-1.

The purpose of ISO 11783 is to provide an open, interconnected system for on-board electronic systems. It is intended to enable electronic control units (ECUs) to communicate with each other, providing a standardized system.

The International Organization for Standardization (ISO) draws attention to the fact that it is claimed that compliance with this part of ISO 11783 may involve the use of a patent concerning the controller area network (CAN) protocol referred to throughout the document.

ISO takes no position concerning the evidence, validity and scope of this patent.

The holder of this patent has assured ISO that he is willing to negotiate licences under reasonable and non-discriminatory terms and conditions with applicants throughout the world. In this respect, the statement of the holder of this patent right is registered with ISO. Information may be obtained from:

Robert Bosch GmbH
Wernerstrasse 51
Postfach 30 02 20
D-70442 Stuttgart-Feuerbach
Germany

Attention is drawn to the possibility that some of the elements of this part of ISO 11783 may be the subject of patent rights other than those identified above. ISO shall not be held responsible for identifying any or all such patent rights.

© ISO 2012 – All rights reserved
Documents
Document Sharing Hub
Full document details: BS ISO 11783-2:2012

Tractors and machinery for agriculture and forestry — Serial control and communications data network —

Part 2:
Physical layer

1 Scope

ISO 11783 as a whole specifies a serial data network for control and communications on forestry or agricultural tractors and mounted, semi-mounted, towed or self-propelled implements. Its purpose is to standardize the method and format of transfer of data between sensors, actuators, control elements and information storage and display units, whether mounted on, or part of, the tractor or implement, and to provide an open interconnect system for electronic systems used by agricultural and forestry equipment. This part of ISO 11783 defines and describes the network's 250 kbit/s, twisted, non-shielded, quad-cable physical layer.

2 Normative references

The following referenced documents are indispensable for the application of this document. For dated references, only the edition cited applies. For undated references, the latest edition of the referenced document (including any amendments) applies.

ISO 1724, *Road vehicles — Connectors for the electrical connection of towing and towed vehicles — 7-pole connector type 12 N (normal) for vehicles with 12 V nominal supply voltage*

ISO 11783-1, *Tractors and machinery for agriculture and forestry — Serial control and communications data network — Part 1: General standard for mobile data communication*

3 Terms and definitions

For the purposes of this document, the terms and definitions given in ISO 11783-1 apply.

4 General description

4.1 Network physical layer

The physical layer of a network is the realization of the electrical connection of a number of electronic control units (ECUs) to a bus segment of the network. The total number of ECUs connected is limited by the electrical loads on the bus segment. In accordance with the electrical parameters specified by this part of ISO 11783, the limit shall be 30 ECUs per segment.

4.2 Physical media

This part of ISO 11783 defines a physical media of twisted quad cable. Two of the conductors, designated CAN_H and CAN_L, are driven with the communications signals. The names of the ECU pins corresponding to these conductors are also designated CAN_H and CAN_L. The third and fourth conductors, designated TBC_PWR and TBC_RTN, provide power for the terminating bias circuits (TBCs) on the bus segments.

Documents
Document Sharing Hub

© ISO 2012 – All rights reserved

Full document details: BS ISO 11783-2:2012

4.3 Differential voltage

The voltages of CAN_H and CAN_L relative to the ECU_GND (ground) of each ECU are denoted by V_{CAN_H} and V_{CAN_L}. The differential voltage, V_{diff}, between V_{CAN_H} and V_{CAN_L} is defined by Equation (1):

$$V_{diff} = V_{CAN_H} - V_{CAN_L} \quad (1)$$

4.4 Bus

4.4.1 Levels

4.4.1.1 General

The bus signal lines can be at one of two levels, and in one or the other of the two logical states, recessive or dominant (see Figure 1). In the recessive state, V_{CAN_H} and V_{CAN_L} are fixed at a bias voltage level. V_{diff} is approximately zero on a terminated bus. The recessive state is transmitted during bus idle when all the node CAN drivers are off. The dominant state is transmitted when any of the node CAN drivers is on. The dominate state is represented by a differential voltage greater than a minimum threshold detected by the node CAN receiver circuits. The dominant state overwrites the recessive state and is transmitted when there is a dominant bit (see also Clause 5).

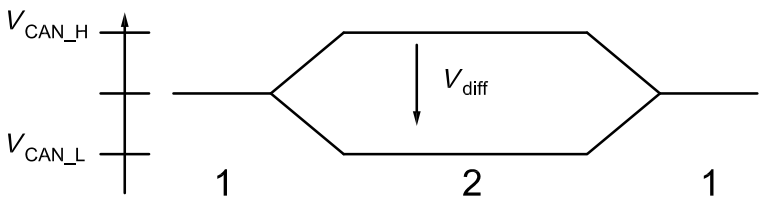

Key

1 recessive

2 dominant

Figure 1 — Physical bit representation of recessive and dominant levels or states

4.4.1.2 During arbitration

During arbitration, a recessive and a dominant bit imposed on the bus signal lines during a given bit time by two ECUs results in a dominant bit.

4.4.2 Voltage range

The bus voltage range is defined by the maximum and minimum acceptable voltage levels of CAN_H and CAN_L, measured with respect to the ECU_GND of each ECU, for which proper operation is guaranteed when all ECUs are connected to bus signal lines.

4.4.3 Termination

The bus signal lines of a bus segment are electrically terminated at each end by a terminating bias circuit (TBC). When a node CAN driver is on, a current, I, flow is induced that is either sunk by the CAN_H termination or sourced by the CAN_L termination. This TBC shall be located externally from the ECU, in order to ensure bus bias and termination when the ECU is disconnected (see Figure 2).

© ISO 2012 – All rights reserved
Documents
Document Sharing Hub
Full document details: BS ISO 11783-2:2012

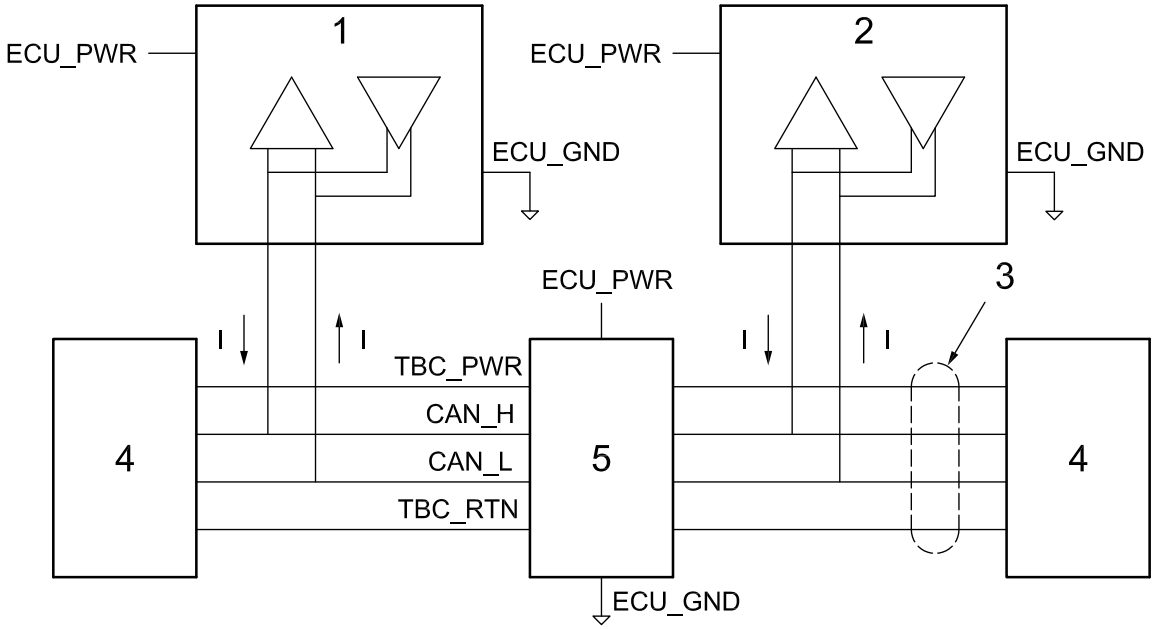

Key

1 ECU No. 1

2 ECU No. n

3 twisted quad cable

4 terminating bias circuit (TBC)

5 power for TBC_PWR and TBC_RTN

Figure 2 — Physical layer functional diagram

4.5 Resistance and capacitance

4.5.1 Internal resistance (R_{in}), capacitance (C_{in})

The internal resistance, R_{in}, of an ECU is defined as the resistance between CAN_H or CAN_L and ground (ECU_GND) in the recessive state, with the ECU disconnected from the bus signal line. The measurement shall be made with the ECU both powered and unpowered, and the minimum value used to confirm compliance.

The internal capacitance, C_{in}, of an ECU is defined as the capacitance between CAN_H or CAN_L and ECU_GND during the recessive state, with the ECU disconnected from the bus signal line. The measurement shall be made with the ECU both powered and unpowered, and the minimum value used to confirm compliance.

© ISO 2012 – All rights reserved

Documents
Document Sharing Hub
Full document details: BS ISO 11783-2:2012

ECU internal resistance and capacitance are illustrated by Figure 3.

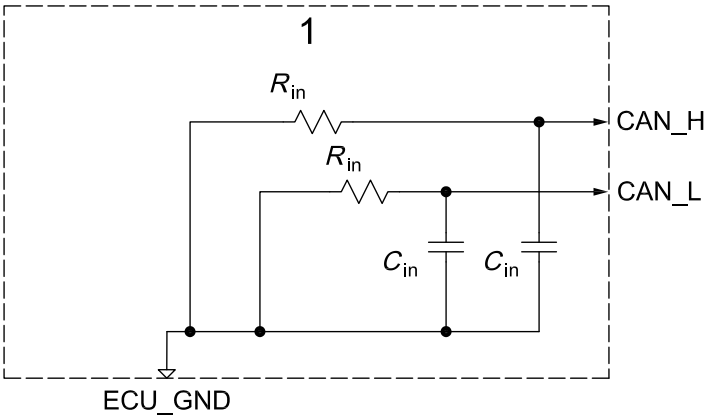

Key

1 ECU

Figure 3 — Internal resistance and capacitance of ECU in recessive state

4.5.2 Differential internal resistance (R_{diff}), capacitance (C_{diff})

The differential internal resistance, R_{diff}, is defined as the resistance seen between CAN_H and CAN_L in the recessive state, with the ECU disconnected from the bus signal line. The measurement shall be made with the ECU both powered and unpowered, and the minimum value used to confirm compliance.

The differential internal capacitance, C_{diff}, of an ECU is defined as the capacitance seen between CAN_H and CAN_L during the recessive state, with the ECU disconnected from the bus signal lines (see Figure 4). The measurement shall be made with the ECU both powered and unpowered, and the minimum value used to confirm compliance.

ECU differential internal resistance and capacitance are illustrated by Figure 4.

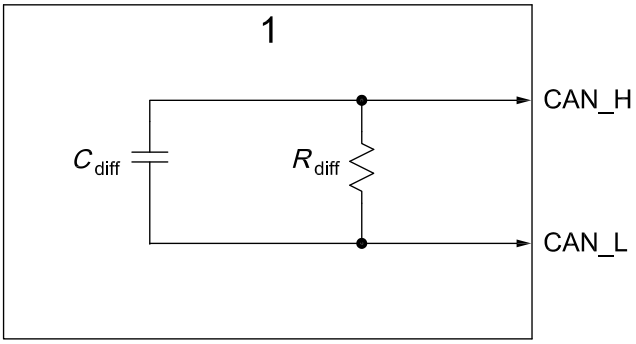

Key

1 ECU

Figure 4 — Differential internal resistance and capacitance of ECU in recessive state

© ISO 2012 – All rights reserved
Documents
Document Sharing Hub
Full document details: BS ISO 11783-2:2012

4.6 Bit time

The bit time, t_B, is defined as the duration of one bit. Bus management functions executed within this duration, such as protocol controller synchronization, network transmission delay compensation and sample point positioning, are defined by the programmable bit timing logic of the CAN protocol-controller integrated circuit (IC). Bit time conforming to this part of ISO 11783 is 4 µs, which corresponds to a data rate of 250 kbit/s. Bit time selection generally demands the use of crystal oscillators at all nodes so that the clock tolerance given in Table 1 can be achieved.

A reliable ISO 11783 network shall be able to be constructed with ECUs from different suppliers. ECUs from different suppliers cannot properly receive and interpret valid messages without timing restrictions achieved by specific timing requirements for the bit timing registers in each protocol controller. Moreover, there are substantial differences between the bit segments used by protocol-controller IC manufacturers.

The following protocol-controller settings are required for an ISO 11783 network with a 250 kbit/s data rate and a bus segment of 40 m in length:

— use of a single sample point;

— a sample point 80 % ± 3 % of the bit time, referenced to the start of the bit time.

NOTE See Annex A for more information on protocol timing and naming, and a detailed description of bit timing for a typical protocol controller.

4.7 AC parameters

Table 1 defines the AC (alternating current) parameters for an ECU disconnected from the bus. The timing parameters apply for an ECU connected to a bus segment.

© ISO 2012 – All rights reserved

Documents
Document Sharing Hub
Full document details: BS ISO 11783-2:2012

Table 1 — AC parameters of a node disconnected from the bus

Parameter	Symbol	Min.	Nom.	Max.	Unit	Condition
Bit time	t_B	3,998	4,000	4,002	µs	250 kbit/s[a]
Transition time	t_T			500	ns	Measured from 10 % to 90 % of the voltage of the prevailing state[b]
Internal delay time	t_{ECU}	0,0	—	0,9	µs	c
Internal capacitance	C_{in}	0		100	pF	250 kbit/s for CAN_H and CAN_L relative to ground[d]
Differential internal capacitance	C_{diff}	0		50	pF	d
Common mode rejection	CMR	40	—	—	dB	DC (direct current) to 50 kHz
	CMR_{5MHz}	10	—	—	dB	5 MHz may linearly decrease between 50 kHz and 5 MHz
Available time	t_{avail}	2,5	—	—	µs	with 40 m bus length[e]

[a] Including initial tolerance, temperature and aging.

[b] The physical layer utilizes field cancellation techniques. The match between the drive voltages and impedances (or currents) on the CAN_H and CAN_L lines are equally important in determining emissions, owing to the spectra presented being determined by the actual wave shape.

[c] The value of t_{ECU} is guaranteed for a differential voltage of V_{diff} = 1,0 V for a transition from recessive to dominant, V_{diff} = 0,5 V for a transition from dominant to recessive. With the bit timing given in this table, a CAN-interface delay of 500 ns is nominal possible (controller not included), with a reserve of about 300 ns. This allows slower transmitter slopes and input filtering. It is recommended that this feature be used to limit EMC. Delay values are for the implement bus and are at the discretion of the original equipment manufacturer (OEM) for the tractor bus.

The minimal internal delay time can be zero. The maximum tolerable value shall be determined by the bit timing and the bus delay time.

Total time delay when arbitrating is $t_T(\text{rise}_1) + t_T(\text{rise}_R) + t_T(\text{repeater}) + t_T(\text{rise}_R) + t_T(\text{repeater}) + 2t_T(\text{line}) + t_T(\text{node}_2)$. If there is 0 delay for the line, repeater and the loop back in node_2, and the transition time is greater than or equal to ¼ bit time, the transition times still consume all possible bit time. Because the sample point is 80 % of the bit time and allows a transition time equal to ¼ bit time, true repeaters cannot be used.

[d] In addition to the internal capacitance restrictions, a bus connection should also have as low as possible series inductance. The minimum values of C_{in} and C_{diff} can be 0, while the maximum tolerable values shall be determined by the bit timing and the topology parameters L and d (see Table 8). Proper functionality is guaranteed if cable resonant waves, if occurring, do not suppress the dominant differential voltage level below V_{diff} = 1 V, nor increase the recessive differential voltage level above V_{diff} = 0,5 V, at each individual ECU (see Table 3 and Table 4).

[e] The available time results from the bit timing unit of the CAN controller protocol IC. For example, as shown in Annex A, this time in most CAN controller ICs corresponds to t_{TSEG1}. Due to poor synchronization it is possible to lose the length of two synchronization jump widths (SJW), so that t_{avail} with one instance of this poor synchronization is t_{TSEG1}–SJW. A time quantum (tq) of 250 ns with SJW = 2 tq, t_{TSEG1} = 12 tq, t_{TSEG2} = 3 tq, results in t_{avail} = 2, 5 µs.

5 Functional description

A linear bus segment is terminated at each end by a TBC (see Figure 2), which provides the electrical bias and common mode termination needed to suppress reflections.

The bus is in the recessive state if the bus transmitters of all nodes on the bus are switched off, with the mean bus voltage being generated by the TBCs on a particular bus segment (Figure 2). A dominant bit is sent to the bus signal lines if the bus transmitter of at least one of the nodes is switched on. This induces a current through each side of the TBCs, with the consequence that a differential voltage is produced between the CAN_H and CAN_L lines.

© ISO 2012 – All rights reserved
Documents
Document Sharing Hub
Full document details: BS ISO 11783-2:2012

The dominant and recessive bus levels are passed into a comparator input in the receiving circuitry to be detected as the recessive and dominant states.

ECUs should be connected only to the CAN_H and CAN_L conductors.

6 Electrical specifications

6.1 Electrical data

6.1.1 General

The parameters specified in Tables 1 to 6 shall be complied with throughout the operating temperature range of each ECU. These parameters allow a maximum of 30 ECUs to be connected to a 40 m bus segment. The limits given in Tables 1 to 5 apply to the CAN_H and CAN_L pins of each ECU, with the ECU disconnected from the bus signal lines (see Clause 7).

6.1.2 Absolute maximum ratings

Table 2 specifies the absolute maximum DC voltages which can be connected to the bus signal lines without damage to transceiver circuits. Although the connection is not guaranteed to operate at these conditions, there is no time limit (operating CAN controllers go “error passive” after a period of time).

Table 2 — Limits of V_{CAN_H} and V_{CAN_L} of bus-disconnected ECU

Parameter		Symbol	Min.	Max.	Unit
Maximum DC voltage					
Conditions	12 V nominal battery voltage	V_{CAN_H}	–3,0	16,0	V
	24 V nominal battery voltage	V_{CAN_L}		32,0	

NOTE 1 Operation of the connection cannot be guaranteed under these conditions.

NOTE 2 No damage may occur to the transceiver circuitry.

NOTE 3 No time limit (although operating CAN controllers go “error passive” after a period of time).

NOTE 4 Relative to ECU_GND pin of ECU (the transceiver has to be able to handle a wider range if there is voltage drop along the lines internal to ECU).

6.1.3 DC parameters

6.1.3.1 Bus-disconnected ECU

Tables 3 and 4 define, respectively, the DC parameters for the recessive and the dominant states of an ECU disconnected from the bus.

© ISO 2012 – All rights reserved

Documents
Document Sharing Hub
Full document details: BS ISO 11783-2:2012

Table 3 — DC parameters for recessive state of bus-disconnected ECU

Parameter	Symbol	Min.	Nom.	Max.	Unit	Condition
Bus voltage output behaviour	V_{CAN_H} V_{CAN_L}	2,0	2,5	3,0	V	a b
Differential output voltage behaviour	V_{diff_OR}	–1 200		50	mV	
Differential internal resistance	R_{diff}	10		100	kΩ	f
Internal resistance	R_{in}	5		50	kΩ	f
Internal resistance match	—	–5		5	%	d f
Input differential voltage detected as recessive	V_{diff_IR}	–1,0		0,5	V	a c e

[a] The ECU is powered.

[b] The Thévenin equivalent resistance of the input biasing circuit appears in series from both the CAN_H and CAN_L terminals to the input bias source. This input bias is required to provide a known state for the network signals of an ECU disconnected from its specific network bus segment.

[c] Reception shall be ensured within the common mode voltage range defined in Tables 5 and 6.

[d] The physical layer utilizes field cancellation techniques. The match between the drive voltages and impedances (or currents) on the CAN_H and CAN_L lines are equally important in determining emissions, owing to the spectra presented being determined by the actual wave shape.

[e] Although $V_{diff} < -1{,}0$ V is only possible during fault conditions, it should be interpreted as recessive for compliance with fault requirements.

[f] The minimum of the value with the ECU powered or unpowered per 4.5.1 and 4.5.2.

Table 4 — DC parameters for dominant state of bus-disconnected ECU

Parameter	Symbol	Min.	Nom.	Max.	Unit	Condition
Bus voltage	V_{CAN_H}	3,0	3,5	5,0	V	a
	V_{CAN_L}	0,0	1,5	2,0		
Differential voltage output	V_{diff_OD}	1,5	2,0	3,0		a
Differential voltage detected as dominant	V_{diff_ID}	1,0	—	5,0		a b

[a] The equivalent series resistance of the two TBCs in parallel (37,5 Ω) is connected between CAN_H and CAN_L and TBC_PWR, providing the bias voltage relative to TBC_RTN.

[b] Reception shall be ensured within the common mode voltage range defined in Table 5 or Table 6.

6.1.3.2 Bus-connected ECU

Tables 5 and 6 define, respectively, the DC parameters for the recessive and dominant states of an ECU connected to a bus segment and other ECUs.

© ISO 2012 – All rights reserved
Documents
Document Sharing Hub
Full document details: BS ISO 11783-2:2012

Table 5 — DC parameters (bus voltage) for all bus-connected ECUs in recessive state, without faults

Parameter	Symbol	Min.	Nom.	Max.	Unit	Condition
Bus voltage	V_{CAN_H} V_{CAN_L}	0,1	2,5	4,5	V	Measured with respect to the ground of each ECU[a]
Differential bus voltage	V_{diff_R}	–400	0	12	mV	Measured at each ECU connected to bus signal lines[b c]

[a] The maximum recessive value of 3,0 V (see Table 3) plus the maximum ground offset of 2,0 V.

[b] The differential bus voltage is determined by the output behaviour of all ECUs during the recessive state. Therefore, V_{diff} is approximately zero (see Table 3).

[c] Although V_{diff} ≤1,0 V is only possible during fault conditions, it should be interpreted as recessive for compliance with fault requirements.

Table 6 — DC parameters (bus voltage) for all bus-connected ECUs in dominant state, without faults

Parameter	Symbol	Min.	Nom.	Max.	Unit	Condition
Bus voltage	V_{CAN_H}	—	3,5	7,0	V	Measured with respect to the ground of each ECU[a]
	V_{CAN_L}	–2,0	1,5	—		
Differential bus voltage	V_{diff_D}	1,2	2,0	3,0	V	Measured at each ECU connected to bus signal lines[b]
				5,0		During arbitration

[a] The minimum value of V_{CAN_H} is determined by the minimum value of V_{CAN_L} plus the minimum value of V_{diff}. The maximum value of V_{CAN_L} is determined by the maximum value of V_{CAN_H} minus the value of V_{diff}.

[b] The loading on the bus signal lines as ECUs are added to a given bus segment of any network is due to R_{diff} and R_{in} of each of the ECUs. Consequently, V_{diff} can decrease. The minimum value of V_{diff} typically limits the number of ECUs allowed on the bus. The maximum value of V_{diff} occurs during arbitration when multiple ECUs are driving the bus signal lines. This maximum value of V_{diff} affects single-ended operation and shall not exceed 3 V.

6.1.4 Bus voltages (operational)

The bus voltage parameters specified in Table 6 apply when all ECUs (from 2 to 30) are connected to a correctly terminated bus segment. The maximum allowable ground offset between ECUs or ECUs and TBCs on the bus is 2 V. The voltage extremes associated with this offset can occur in either the dominant or recessive state.

6.1.5 Electrostatic discharge (ESD)

CAN_H and CAN_L should be tested for ESD while disconnected from the bus signal lines, in accordance with ISO 14982 and using 15 kV.

6.2 Physical media parameters

6.2.1 Twisted quad cable

The parameters for the twisted quad cable shall be as specified in Table 7.

© ISO 2012 – All rights reserved

Documents
Document Sharing Hub
Full document details: BS ISO 11783-2:2012

Table 7 — Physical media parameters for twisted quad cable

Parameter	Symbol	Min.	Nom.	Max.	Unit	Condition
Impedance	Z_H Z_L	70	75	80	Ω	Measured at 1 MHz between either signal line and ground with TBC_PWR and TBC_RTN grounded
Specific resistance	R_b	0	25	50	mΩ/m	a
Specific line delay	T_p	—	5,0	—	ns/m	b
Specific capacitance	C_b	0	40	75	pF/m	Between CAN_H and CAN_L
	C_a	0	70	110	pF/m	Between adjacent conductors
Conductor size	A_c	—	0,5	—	mm^2	Cross-section to be formed from 16 or greater strands of 32 AWG tinned or bare copper.
Conductor insulation diameter	D_{ci}	2,0	2,11	3,05	mm	Select the correct sealing type (N, T or E) for implement breakaway connector plug (see Figure 10)
Colour of conductor insulation	—	—	Red	—	—	TBC_PWR
	—	—	Yellow	—	—	CAN_H
	—	—	Black	—	—	TBC_RTN
	—	—	Green	—	—	CAN_L
Conductor twist	—	48	50	52	mm/turn	Left-hand lay sequence TBC_PWR, CAN_H, TBC_RTN, CAN_L
Jacket size	T_j	—	0,5	—	mm	—
Cable diameter	D_c	6,0	6,2	8,5	mm	—
Temperature range	T	–40	—	+125	°C	Continuous operation without degradation

[a] The differential voltage on the bus segment sensed by a receiving ECU depends on the line resistance between it and the transmitting ECU. Therefore, the total resistance of the signal conductors is limited by the bus level parameters of each ECU.

[b] The minimum delay time between two points on a bus segment can be zero. The maximum value is determined by the bit time and the delay times of the transmitting and receiving circuitry.

6.2.2 Topology

In order to avoid cable reflections, the wiring topology of a bus segment shall have, as nearly as possible, a linear structure. In practice, it is necessary to connect short stubs to a main backbone cable, as shown in Figure 5. To minimize standing waves, nodes should not be equally spaced on the bus segment and stub lengths should not all be of the same length. The dimensional parameters of this topology, as shown in Figure 5, shall be as given in Table 8.

© ISO 2012 – All rights reserved
Documents
Document Sharing Hub
Full document details: BS ISO 11783-2:2012

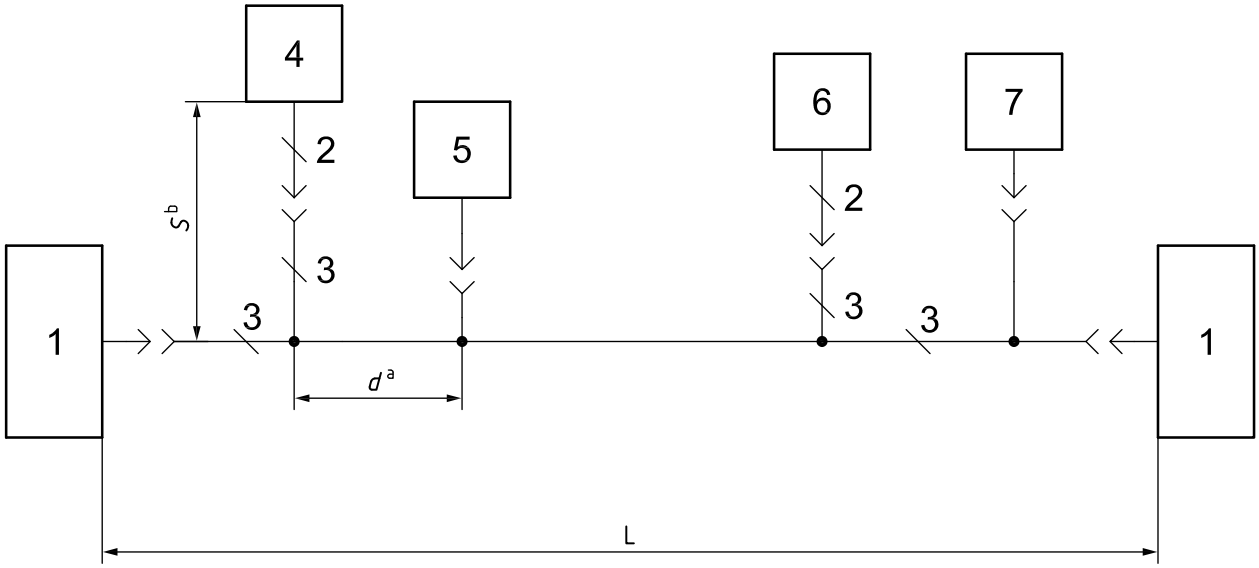

Key

1 terminating bias circuit (TBC)
2 two wires, CAN_H and CAN_L
3 twisted quad cable
4 ECU 1
5 ECU 2
6 ECU n–1
7 ECU n
a Distance d should be random, but not less than 0,1 m.
b The length of the two wires shall be less than 0,15 m.

Figure 5 — Topology of bus-segment wiring

Table 8 — Topology dimensional parameters

Parameter	Symbol	Min.	Max.	Unit	Condition
Bus length	L	0	40	m	Not including stubs
Stub length	S	0	1	m	—
Node distance	d	0,1	40	m	—

6.2.3 ECU connection to TBC_PWR and TBC_RTN

In order to sense the status of the network, each node on the bus may provide a pin for TBC_PWR and TBC_RTN. Loading limits shall be those given in Table 9.

6.2.4 Power For TBC_PWR and TBC_RTN

TBC_PWR and TBC_RTN for a given bus segment shall be supplied at only one point. This single connection point shall be selected to meet the filter requirements in Table 10. Filtering and regulation may be provided within the module providing this interconnection (see Annex B).

© ISO 2012 – All rights reserved

Documents
Document Sharing Hub
Full document details: BS ISO 11783-2:2012