BS ISO 11783-3:2018

BSI Standards Publication

Tractors and machinery for agriculture and forestry — Serial control and communications data network

Part 3: Data link layer

Documents
Document Sharing Hub

Full document details: BS ISO 11783-3:2018

National foreword

This British Standard is the UK implementation of ISO 11783-3:2018. It supersedes BS ISO 11783-3:2014, which is withdrawn.

The UK participation in its preparation was entrusted to Technical Committee AGE/6, Agricultural tractors and forestry machinery.

A list of organizations represented on this committee can be obtained on request to its secretary.

This publication does not purport to include all the necessary provisions of a contract. Users are responsible for its correct application.

© The British Standards Institution 2018
Published by BSI Standards Limited 2018

ISBN 978 0 580 94270 9

ICS 35.240.99; 35.100.20; 35.240.68; 65.060.01

Compliance with a British Standard cannot confer immunity from legal obligations.

This British Standard was published under the authority of the Standards Policy and Strategy Committee on 30 November 2018.

Amendments/corrigenda issued since publication

Date	Text affected

Documents
Document Sharing Hub

Full document details: BS ISO 11783-3:2018

INTERNATIONAL STANDARD

ISO 11783-3

Fourth edition
2018-11

Tractors and machinery for agriculture and forestry — Serial control and communications data network —

Part 3: Data link layer

Tracteurs et matériels agricoles et forestiers — Réseaux de commande et de communication de données en série —

Partie 3: Couche liaison de données

Reference number
ISO 11783-3:2018(E)

Documents
Document Sharing Hub

© ISO 2018

Full document details: BS ISO 11783-3:2018

COPYRIGHT PROTECTED DOCUMENT

© ISO 2018

All rights reserved. Unless otherwise specified, or required in the context of its implementation, no part of this publication may be reproduced or utilized otherwise in any form or by any means, electronic or mechanical, including photocopying, or posting on the internet or an intranet, without prior written permission. Permission can be requested from either ISO at the address below or ISO's member body in the country of the requester.

ISO copyright office
CP 401 • Ch. de Blandonnet 8
CH-1214 Vernier, Geneva
Phone: +41 22 749 01 11
Fax: +41 22 749 09 47
Email: copyright@iso.org
Website: www.iso.org

Published in Switzerland

© ISO 2018 – All rights reserved

Documents
Document Sharing Hub

Full document details: BS ISO 11783-3:2018

Contents

Page

Foreword ... **v**
Introduction ... **vi**
1 Scope ... **1**
2 Normative references ... **1**
3 Terms and definitions ... **1**
4 General description ... **1**
5 Technical requirements ... **2**
5.1 Message frame format ... 2
5.1.1 General ... 2
5.1.2 Message frame format according to ISO 11783 (ISO 11898-1 CEFF) ... 2
5.1.3 Parameter group numbers (PGN) ... 6
5.1.4 ISO 11783 support of ISO 11898-1 CBFF messages ... 7
5.2 Protocol data unit (PDU) ... 8
5.2.1 General ... 8
5.2.2 Priority (P) ... 8
5.2.3 Extended data page (EDP) ... 8
5.2.4 Data page (DP) ... 8
5.2.5 PDU format (PF) ... 9
5.2.6 PDU Specific (PS) ... 9
5.2.7 Source address (SA) ... 10
5.2.8 Data field ... 10
5.3 Protocol data unit (PDU) formats ... 11
5.3.1 General ... 11
5.3.2 PDU1 format ... 11
5.3.3 PDU2 format ... 12
5.4 Message types ... 13
5.4.1 General ... 13
5.4.2 Command ... 14
5.4.3 Request ... 14
5.4.4 Broadcast/Response ... 16
5.4.5 Acknowledgement ... 16
5.4.6 Group function ... 22
5.4.7 Request2 ... 24
5.4.8 Transfer ... 26
5.5 Message priority ... 27
5.6 Bus access ... 27
5.7 Contention-based arbitration ... 27
5.8 Error detection ... 28
5.9 Assignment process for SA and PGN ... 28
5.9.1 General ... 28
5.9.2 Address assignment criteria ... 28
5.9.3 Parameter group assignment criteria ... 29
5.9.4 Data field definition ... 29
5.10 Transport protocol functions ... 31
5.10.1 General ... 31
5.10.2 “Packetization” and reassembly ... 31
5.10.3 Transport Protocol — Connection management ... 32
5.10.4 Transport Protocol — Connection management messages (TP.CM) ... 34
5.10.5 Transport Protocol — Data Transfer messages (TP.DT) ... 38
5.10.6 Transport Protocol Connection constraints ... 39
5.11 Extended transport protocol functions ... 40
5.11.1 Overview ... 40

© ISO 2018 – All rights reserved

AVA Documents
Document Sharing Hub
Full document details: BS ISO 11783-3:2018

5.11.2 General ... 40
5.11.3 Message packets ... 40
5.11.4 Extended Transport Protocol — Connection Management ... 40
5.11.5 Extended Transport Protocol — Connection Management messages (ETP.CM) ... 42
5.11.6 Extended Transport Protocol — Data Transfer messages (ETP.DT) ... 45
5.11.7 Extended Transport Protocol — Connection constraints ... 45
5.12 PDU processing requirements ... 45
5.13 Application notes ... 46
5.13.1 High data rates ... 46
5.13.2 Request scheduling ... 46
5.13.3 Controller response time and timeout defaults ... 46
5.13.4 Required responses ... 47
5.13.5 Transmission of PGN to specific or global destinations ... 47
5.13.6 CTS number of packet recommendation ... 47

Annex A (informative) **ISO 11783 PDU processing — Typical receive routine** ... **48**

Annex B (informative) **Transport protocol transfer sequences — Examples of connection mode data transfer** ... **50**

Annex C (informative) **Communication mode examples** ... **59**

Annex D (informative) **Network bandwidth utilization** ... **61**

Bibliography ... **62**

© ISO 2018 – All rights reserved

Documents
Document Sharing Hub
Full document details: BS ISO 11783-3:2018

Foreword

ISO (the International Organization for Standardization) is a worldwide federation of national standards bodies (ISO member bodies). The work of preparing International Standards is normally carried out through ISO technical committees. Each member body interested in a subject for which a technical committee has been established has the right to be represented on that committee. International organizations, governmental and non-governmental, in liaison with ISO, also take part in the work. ISO collaborates closely with the International Electrotechnical Commission (IEC) on all matters of electrotechnical standardization.

The procedures used to develop this document and those intended for its further maintenance are described in the ISO/IEC Directives, Part 1. In particular, the different approval criteria needed for the different types of ISO documents should be noted. This document was drafted in accordance with the editorial rules of the ISO/IEC Directives, Part 2 (see www.iso.org/directives).

Attention is drawn to the possibility that some of the elements of this document may be the subject of patent rights. ISO shall not be held responsible for identifying any or all such patent rights. Details of any patent rights identified during the development of the document will be in the Introduction and/or on the ISO list of patent declarations received (see www.iso.org/patents).

Any trade name used in this document is information given for the convenience of users and does not constitute an endorsement.

For an explanation of the voluntary nature of standards, the meaning of ISO specific terms and expressions related to conformity assessment, as well as information about ISO's adherence to the World Trade Organization (WTO) principles in the Technical Barriers to Trade (TBT) see www.iso.org/iso/foreword.html.

This document was prepared by Technical Committee ISO/TC 23, *Tractors and machinery for agriculture and forestry*, Subcommittee SC 19, *Agricultural electronics*.

This fourth edition cancels and replaces the third edition (ISO 11783-3:2014), which has been technically revised. The main changes compared to the previous edition are as follows:

— updates wording with respect to ISO 11898-1 (exclude the usage of CAN Flexible Data Rate);

— allows BAM.TP to be sent with 10 ms;

— ACKNOWLEDGEMENT PG supports Extended Identifier Type when Request2 utilizes it.

A list of all parts in the ISO 11783 series can be found on the ISO website.

Any feedback or questions on this document should be directed to the user's national standards body. A complete listing of these bodies can be found at www.iso.org/members.html.

© ISO 2018 – All rights reserved

Documents
Document Sharing Hub
Full document details: BS ISO 11783-3:2018

Introduction

ISO 11783 specifies a communications system for agricultural equipment based on the ISO 11898-1 CAN protocol. SAE J 1939 documents[1)], on which parts of ISO 11783 are based, were developed jointly for use in truck and bus applications and for construction and agriculture applications. Joint documents have been completed to allow electronic units that meet the truck and bus SAE J 1939 specifications to be used by agricultural and forestry equipment with minimal changes. General information on ISO 11783 can be found in ISO 11783-1.

The purpose of ISO 11783 is to provide an open, interconnected system for on-board electronic systems. It is intended to enable electronic control units (ECUs) to communicate with each other, providing a standardized system.

1) Society of automotive engineers.

© ISO 2018 – All rights reserved
Documents
Document Sharing Hub
Full document details: BS ISO 11783-3:2018

Tractors and machinery for agriculture and forestry — Serial control and communications data network —

Part 3: Data link layer

1 Scope

This document specifies the application, the network layer protocols and the mapping to the controller area network (CAN) data link layer protocol as specified in ISO 11898-1. The application layer specifies protocol data units (PDU), which can be mapped to Classical CAN data frames using the Classical Extended Frame Format (CEFF). For PDUs exceeding the length of the CEFF-formatted data frames, this document specifies transport layer protocols and the mapping to CEFF-formatted data frames.

2 Normative references

The following documents are referred to in the text in such a way that some or all of their content constitutes requirements of this document. For dated references, only the edition cited applies. For undated references, the latest edition of the referenced document (including any amendments) applies.

ISO 11783-1, *Tractors and machinery for agriculture and forestry — Serial control and communications data network — Part 1: General standard for mobile data communication*

ISO 11783-5, *Tractors and machinery for agriculture and forestry — Serial control and communications data network — Part 5: Network management*

ISO 11783-7, *Tractors and machinery for agriculture and forestry — Serial control and communications data network — Part 7: Implement messages application layer*

ISO 11898-1, *Road vehicles — Controller area network (CAN) — Part 1: Data link layer and physical signalling*

ISO 15765-2, *Road vehicles — Diagnostic communication over Controller Area Network (DoCAN) — Part 2: Transport protocol and network layer services*

3 Terms and definitions

For the purposes of this document, the terms and definitions given in ISO 11783-1 and ISO 11898-1 apply.

ISO and IEC maintain terminological databases for use in standardization at the following addresses:

— ISO Online browsing platform: available at https://www.iso.org/obp

— IEC Electropedia: available at http://www.electropedia.org/

4 General description

The data link layer enables the reliable transfer of data across the physical link. This consists of sending the CAN classical data frame with the necessary synchronization, sequence control, error control and flow control. The flow control is accomplished through a consistent message frame format.

© ISO 2018 – All rights reserved

Documents
Document Sharing Hub
Full document details: BS ISO 11783-3:2018

5 Technical requirements

5.1 Message frame format

5.1.1 General

The message frame format shall conform to the CAN requirements. The CAN specification referenced throughout this document is specified in ISO 11898-1. When there are differences between the CAN specification and this document, this document shall be the governing document.

The CAN document specifies, in an information-routing-related discussion, that control function addresses are not used. While this is true for some applications of CAN, it is not true for ISO 11783. The definition of the ISO 11783 network requires that control function addressing be used to prevent multiple control functions from using the same CAN identifier field. Many additional requirements exist in ISO 11783 that are not specified by CAN.

ISO 11898-1 specifies two classical frame formats: Classical Basic Frame Format (CBFF) and CEFF. ISO 11898-1 compatibility implies that messages of both formats can potentially be present on a single network, by using certain bit coding which allows for the recognition of the different formats. Up to this point, ISO 11783 also accommodates both message frame formats. However, ISO 11783 only defines a full strategy for standardized communications using the CEFF. All CBFF messages are for proprietary use following the rules defined in this document. Any FD Frame Format shall not be used on the ISO 11783 network.

ISO 11783 controllers shall therefore use the CEFF. CBFF messages may reside on the network, but only in accordance with this document.

The classical CAN data frame is parsed into different bit fields, as shown in Figure 1. The number and parsing of the bits in the arbitration and control field differs between the CBFF and CEFF messages. CBFF messages, as shown in Figure 1 a), contain 11 identifier bits in the arbitration field, whereas the arbitration field of CEFF messages, as shown in Figure 1 b), contain 29 identifier bits. ISO 11783 has further defined the identifier bits in the arbitration field of the CAN message frame formats. These definitions are given in Table 1.

5.1.2 Message frame format according to ISO 11783 (ISO 11898-1 CEFF)

The CEFF message, illustrated by Figure 1, encompasses a single protocol data unit (PDU). The PDU consists of seven predefined fields, assimilated from information provided by the application layer:

— Priority;

— Extended Data Page (EDP);

— Data Page (DP);

— PDU Format (PF),

— PDU Specific (PS), which can be Destination Address (DA), Group Extension (GE) or proprietary;

— Source Address (SA);

— Data.

See 5.2 for a detailed description of each field and 5.3 for PDU formats.

© ISO 2018 – All rights reserved
Documents
Document Sharing Hub
Full document details: BS ISO 11783-3:2018

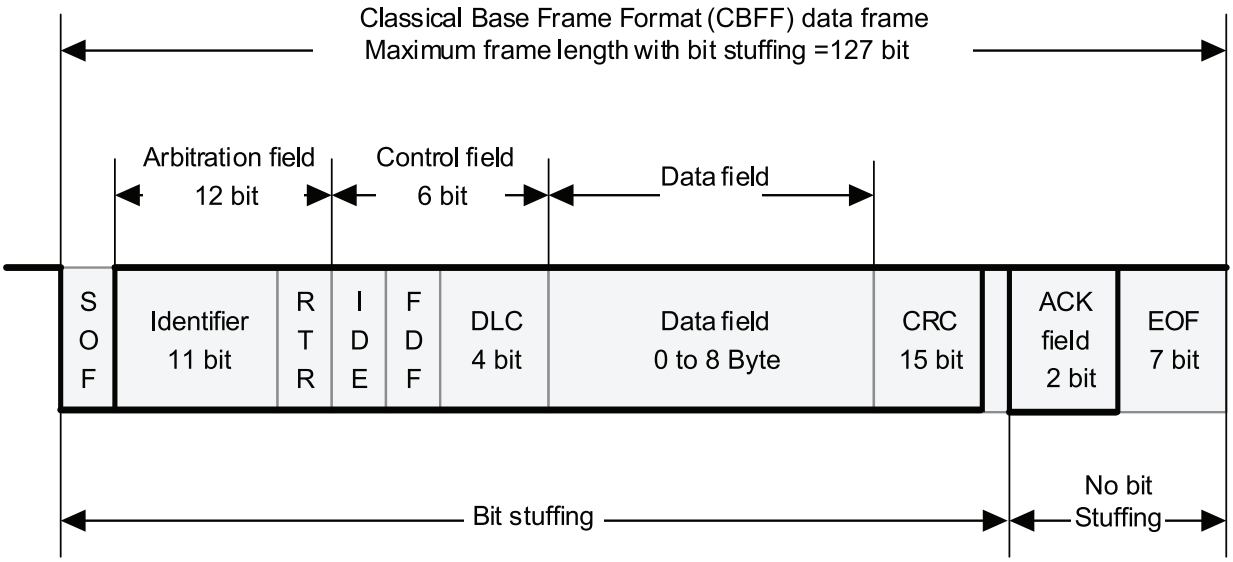

a) Classical Base Frame Format (CBFF)

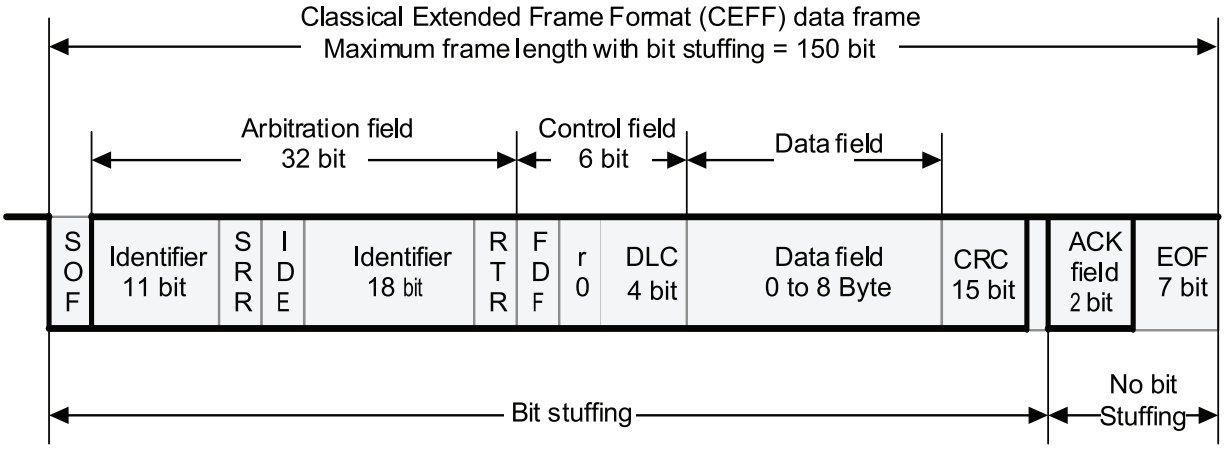

b) Classical Extended Frame Format (CEFF)

Figure 1 — Classical CAN data frames

The fields are then packaged into one classical CAN data frame and sent over the physical media to other network controllers. The layers of the OSI model that ISO 11783 supports are shown in Figure 2. It is possible that some parameter group definitions require more than one classical CAN data frame in order to send their information.

© ISO 2018 – All rights reserved

Documents
Document Sharing Hub
Full document details: BS ISO 11783-3:2018

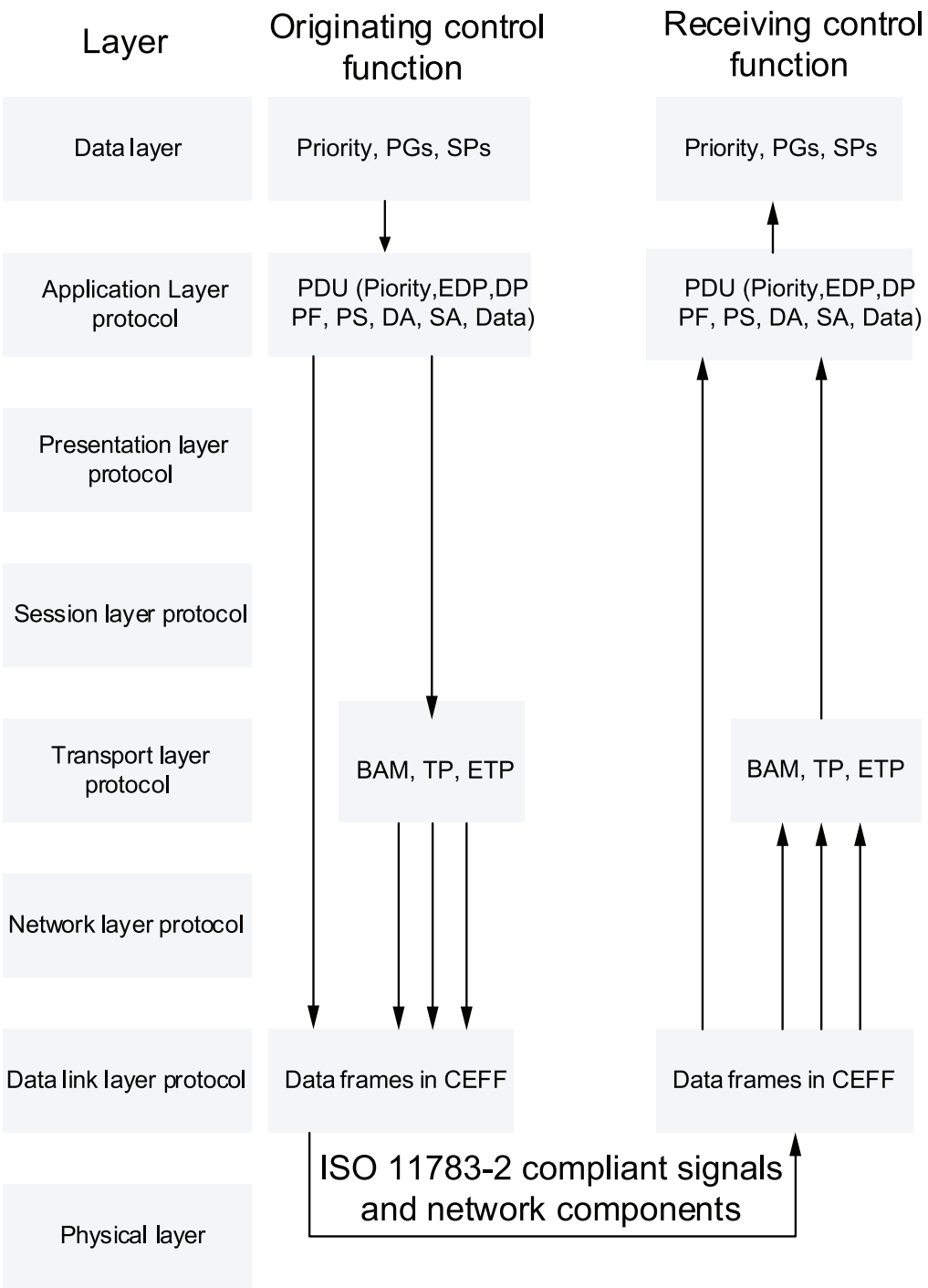

Figure 2 — Application of OSI model according to ISO 11783

Table 1 shows the arbitration and control fields of the 29 bit identifier for CAN, 29 bit identifier for ISO 11783 and 11 bit identifier for CAN, and the use of the 11 bit identifier on an ISO 11783 network. A complete definition for each of the bit field assignments according to ISO 11783 is given in 5.3. In ISO 11783, the CAN data frame data field is described as Bytes 1 to 8. Byte 1's MSB (most significant bit), Bit 8, is the first bit sent closest to the data length code (DLC). Byte 8's LSB (least significant bit), Bit 1, is the last of the data bits to be sent and is closest to the cyclic redundancy check (CRC) field. See Figure 3.

When the extended data page (EDP) is equal to 1 and the data page (DP) is equal to 1, the CAN frame is identified as an ISO 15765-2 formatted frame. ISO 15765-2 specifies diagnostic communication

© ISO 2018 – All rights reserved
Documents
Document Sharing Hub
Full document details: BS ISO 11783-3:2018

over CAN (DoCAN). Therefore, the processing of this specific CAN frame format does not follow the definitions specified in ISO 11783 and shall be in accordance with ISO 15765-2 (see 5.2.4).

Table 1 — Mapping of ISO 11783 into CAN arbitration and control fields

Bit number	29 bit identifier		11 bit identifier	
	CAN	**ISO 11783**	CAN	**ISO 11783**[b]
1	SOF	SOF[a]	SOF	SOF[a]
2	ID28	P3	ID28	P3
3	ID27	P2	ID27	P2
4	ID26	P1	ID26	P1
5	ID25	EDP	ID25	ID8[a]
6	ID24	DP	ID24	ID7[a]
7	ID23	PF8	ID23	ID6[a]
8	ID22	PF7	ID22	ID5[a]
9	ID21	PF6	ID21	ID4[a]
10	ID20	PF5	ID20	ID3[a]
11	ID19	PF4	ID19	ID2[a]
12	ID18	PF3	ID18	ID1[a]
13	SRR (r)	SRR[a]	RTR (x)	RTR[a] (d)
14	IDE (r)	IDE[a]	IDE (d)	IDE[a]
15	ID17	PF2	FDF (d)	FDF[a]
16	ID16	PF1	DLC4	DLC4
17	ID15	PS8	DLC3	DLC3
18	ID14	PS7	DLC2	DLC2
19	ID13	PS6	DLC1	DLC1
20	ID12	PS5		
21	ID11	PS4		
22	ID10	PS3		
23	ID9	PS2		
24	ID8	PS1		
25	ID7	SA8		
26	ID6	SA7		
27	ID5	SA6		
28	ID4	SA5		
29	ID3	SA4		
30	ID2	SA3		
31	ID1	SA2		
32	ID0	SA1		
33	RTR (x)	RTR[a] (d)		
34	FDF (x)	FDF[a] (d)		
35	r0 (d)	r0[a]		

© ISO 2018 – All rights reserved

Documents
Document Sharing Hub
Full document details: BS ISO 11783-3:2018

Table 1 *(continued)*

Bit number	29 bit identifier		11 bit identifier	
	CAN	ISO 11783	CAN	ISO 11783[b]
36	DLC4	DLC4		
37	DLC3	DLC3		
38	DLC2	DLC2		
39	DLC1	DLC1		

SOF	Start of Frame bit	EDP	Extended Data Page according to ISO 11783
ID##	Identifier bit number (#)	SA#	Source Address bit number (#) according to ISO 11783
SRR	Substitute Remote Request	DP	Data Page according to ISO 11783
RTR	Remote Transmission Request bit	PF#	PDU Format bit number (#) according to ISO 11783
IDE	Identifier Extension bit	PS#	PDU Specific bit number (#) according to ISO 11783
FDF	FD Format Indicator	(d)	dominant bit
r#	CAN reserved bit number (#)	(r)	recessive bit
DLC#	Data Length Code bit number (#)	(x)	bit state dependent on message
P#	Priority bit number (#) according to ISO 11783		

[a] CAN-defined bit, unchanged in ISO 11783.

[b] Required format of proprietary 11 bit identifiers.

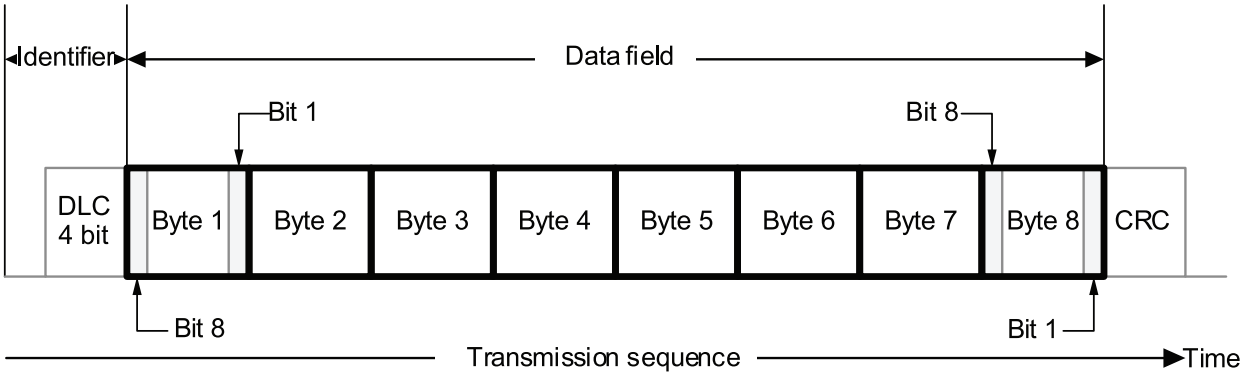

Figure 3 — Classical CAN data field

5.1.3 Parameter group numbers (PGN)

Whenever it is necessary to identify a parameter group in the data field of a classical CAN data frame, this is expressed in 24 bit. The 24 bit value is sent the least significant byte (LSB) first (see Table 2), also according to which the most significant byte (MSB) is sent third and the middle byte second and the LSB first. The 24 bit PGN is determined from the following constituent components: 6 bit set to zero, Extended Data Page bit, Data Page bit, PDU Format field (8 bit), and PDU Specific field (8 bit).

The procedure for the bit fields to be converted to PGN is as follows. The six MSB of the PGN are set to zero. Then the Extended Data Page bit, Data Page bit and PDU Format field are copied into the next 10 bit. If the PF value is less than 240 ($F0_{16}$) then the LSB of the PGN is set to zero. Otherwise, it is set

© ISO 2018 – All rights reserved
Documents
Document Sharing Hub
Full document details: BS ISO 11783-3:2018

to the value of the PS field. See Table 2 for an illustration of the PGN, their corresponding bits and their conversion to a decimal number.

NOTE Not all 131 072 combinations (2^{17}) are available to be assigned as PGN. Only a total of 8 672 combinations are available for assignment {calculated as: 2 pages × [240 + (16 × 256)] = 8 672}, using the conventions specified in this document. See ISO 11783-1 for the latest PGN assignments.

Table 2 — Parameter group number (PGN) examples

PGN constituent components					PGN		Numbers of assignable PGs	Cumulative numbers of PGs	ISO- or manufacturer-assigned
PGN (MSB) Byte 1 sent third in CAN data frame			PGN Byte 2 sent second in CAN data frame	PGN (LSB) Byte 3 sent first in CAN data frame	Dec_{10}	Hex_{16}			
Bit 8–3	EDP	DP	PF	PS					
	Bit 2	Bit 1	Bit 8–1	Bit 8–1					
0	0	0	0	0	0	000000_{16}			ISO
							239	239	
0	0	0	238	0	60 928	$00EE00_{16}$			
0	0	0	239	0	61 184	$00EF00_{16}$	1	240	MF
0	0	0	240	0	61 440	$00F000_{16}$			ISO
							3 840		
0	0	0	254	255	65 279	$00FEFF_{16}$		4 080	
0	0	0	255	0	65 280	$00FF00_{16}$			
							256		MF
0	0	0	255	255	65 535	$00FFFF_{16}$		4 336	
0	0	1	0	0	65 536	010000_{16}			
0	0	1	238	0	126 464	$01EE00_{16}$	239		ISO
0	0	1	239	0	126 720	$01EF00_{16}$	240	4576	MF
0	0	1	240	0	126 976	$01F000_{16}$			
							4 096		ISO
0	0	1	255	255	131 071	$01FFFF_{16}$		8 672	

5.1.4 ISO 11783 support of ISO 11898-1 CBFF messages

Controllers on the ISO 11783 network may support the CBFF (11 bit identifier) message format. Though these are not compatible with the ISO 11783 message structure, to accommodate the co-existence of the two formats, a minimum level of definition is given. This minimum definition allows controllers that use this format to not interfere with other controllers. CBFF messages are defined as being proprietary. In reference to Table 1, the 11 bit identifier field is parsed as follows: the three most significant bits are used as priority bits; the eight least significant bits identify the SA of the PDU. Priority bits are described in 5.2.2. The SA is described in 5.2.7.

Incorrect bus arbitration can occur when two messages, one base frame and one extended frame, access the bus at the same time. The source address (SA) is a higher relative priority in the base frame messages than in the extended frame messages. The message with an 11 bit identifier (base frame) can have an SA indicating a higher priority than that of the Extended Data Page bit, Data Page bit and PDU Format of the 29 bit identifier (extended frame) message. The three priority bits should be used to achieve the correct bus arbitration.

IMPORTANT — ISO 11783 defines a full strategy for standardized communications using the CEFF. Hardware that does not conform to ISO 11898-1 shall not be used on the network, since these versions of hardware do not allow the CEFF messages to be communicated.

© ISO 2018 – All rights reserved

Documents
Document Sharing Hub
Full document details: BS ISO 11783-3:2018

5.2 Protocol data unit (PDU)

5.2.1 General

The applications and/or network layer provide a string of information that is assimilated into a protocol data unit. The protocol data unit provides a framework for organizing the information that is essential to each classical CAN data frame sent. The protocol data unit (PDU) of the ISO 11783 network shall consist of the seven fields listed in 5.1.2 and specified below. These fields shall then be packaged into one or more classical CAN data frames and sent over the physical media to other network controllers. There is only one PDU per classical CAN data frame.

NOTE Some PGN definitions require more than one classical CAN data frame for sending the corresponding data.

Certain bits of the classical CAN data frame fields are left out of the PDU definition because they are controlled entirely by the CAN specification and are invisible to all of the OSI layers above the data link layer. These include the SOF, SRR, IDE, RTR, FDF, CRC, ACK and EOF fields, and parts of the control field. They are defined by the CAN protocol definition and remain unmodified by ISO 11783.

The PDU fields (see Figure 4) are specified in 5.2.2 to 5.2.8.

	Priority,	EDP,	DP,	PF,	PS,	SA,	Data
No. of bits	...3...,	...1...,	...1...,	...8...,	...8...,	...8...,	...64...

Figure 4 — PDU fields

5.2.2 Priority (P)

Priority bits are used to optimize message latency for transmission onto the bus only. They should be globally masked off by the receiving controller (ignored). The priority of any message can be set from highest, 0 (000_2), to lowest, 7 (111_2). The default for all control oriented messages is 3 (011_2). The default for all other informational, proprietary, request and NACK messages is 6 (110_2). This permits the priority to be raised or lowered in the future as new PGN values are assigned and bus traffic changes. A recommended priority is assigned to each PGN when it is added to the application layer standards. However, the priority field should be reprogrammable to allow for network tuning by the manufacturers if the need arises.

5.2.3 Extended data page (EDP)

The extended data page (EDP) bit is used in conjunction with the data page bit to determine the structure of the CAN identifier of the classical CAN data frame. All ISO 11783 messages shall set the extended data page bit to ZERO on transmit. (See Table 3 for the defined uses of the EDP and DP fields.) It is possible that future definitions will expand the PDU Format field, defining new PDU formats, expanding the priority field, or increasing the address space.

5.2.4 Data page (DP)

The data page (DP) bit is used in conjunction with the EDP bit to determine the structure of the CAN identifier of the classical CAN data frame. With the EDP set to 0, the DP bit selects between page 0 and page 1 of the PGN descriptions. See Table 3.

© ISO 2018 – All rights reserved
Documents
Document Sharing Hub
Full document details: BS ISO 11783-3:2018

Table 3 — Definition of extended data page (EDP) and data page (DP) use

EDP Bit 25	DP Bit 24	Description
CAN ID Bit 25	CAN ID Bit 24	
0	0	ISO 11783 page 0 PGN
0	1	ISO 11783 page 1 PGN
1	0	ISO 11783 reserved
1	1	ISO 15765-2 defined PGN

NOTE The EDP and DP of the CAN 29 bit identifier being set to "11_2" identifies it as an ISO 15765-2 message. This means that the remaining bits of the CAN identifier is *not* set up as specified by ISO 11783; CAN frames following this format are not described in ISO 11783.

5.2.5 PDU format (PF)

PDU format (PF) is an 8 bit field that determines the PDU format and is one of the fields used to determine the PGN assigned to the classical CAN data field. PGN are used to identify or label commands, data, some requests, acknowledgements and negative acknowledgements, as well as for identifying or labelling information that requires one or more classical CAN data frames to communicate the information. If there is more information than can fit in eight data bytes, a multi-packet message is required to be sent. If there are eight or less data bytes, then a single classical CAN data frame is used. A PGN can represent one or more parameters, where a parameter is a piece of data such as engine rotations per minute. Even though a PGN label can be used for one parameter, it is recommended that multiple parameters be grouped so that all 8 byte of the data field are used.

The definition of two proprietary PGN allows both PDU1 and PDU2 formats to be used. The interpretation of the proprietary information varies between manufacturers.

EXAMPLE Even though two different engines can use a common set of standard PGNs, it is probable that one manufacturer's proprietary communications will be different from another's.

5.2.6 PDU Specific (PS)

The PDU specific (PS) field is an 8 bit field whose definition depends on its PDU format, which determines whether it will be a DA or GE field. See Table 4.

Table 4 — Definition of PDU Specific (PS) field

PDU format	PF	PS
PDU1	0–239	Destination Address (DA)
PDU2	240–255	Group Extension (GE)

The DA field defines the specific address to which the message is being sent. Any other controller should ignore this message. The global destination address (255) requires all controllers to listen and respond accordingly as message recipients.

The GE field, in conjunction with the four least significant bits of the PF field, provides for 4 096 parameter groups per data page. These are only available using the GE format PDU (PDU2).

NOTE When the four most significant bits of the PDU format field are set, it indicates that the PS field is a GE field.

In addition, 240 parameter groups are provided in each data page for use only in the destination-specific format PDU (PDU1 format). In total, 8 672 parameter groups are available to be defined using the two data pages currently available.

© ISO 2018 – All rights reserved

Documents
Document Sharing Hub
Full document details: BS ISO 11783-3:2018

This total is calculated using Formula (1):

$$[240 + (16 \times 256)] \times 2 = 8\,672 \quad (1)$$

where

240 represents the number of PDU format field values available per data page (i.e. PDU1 format, PS field = DA);

16 is the number of PDU format values per GE value (i.e. PDU2 format only);

256 is the number of possible GE values (i.e. PDU2 format only);

2 is the number of data page states (both PDU formats).

See also 5.3.

5.2.7 Source address (SA)

The source address (SA) field is 8 bit long. There shall only be one control function on the network with a given source address.

NOTE For address management and allocation, and procedures to prevent duplication of SA, see ISO 11783-5.

5.2.8 Data field

5.2.8.1 Data from 0 to 8 byte

When eight or less bytes of data are required for expressing a given parameter group, then all eight data bytes of the classical CAN data frame can be used. It is recommended that 8 byte be allocated or reserved for all PGN assignments likely to expand in the future. This provides a means of adding parameters easily and avoiding incompatibility with previous revisions that only define part of the data field. Once the number of bytes of data associated with a PGN is specified, it cannot be changed (and cannot become multi-packet either, unless originally defined as such). The CAN data length code (DLC) is set to the defined parameter group "data length" value when it is 8 byte or less; otherwise, when the PG data length is 9 byte or greater, the CAN DLC is set to 8. For example, the REQUEST PGN, 59 904, has a PG data length of 3 byte, so the CAN DLC is set to 3. An individual group function (see 5.4.6) shall use the same data field length because the CAN identifier is always identical; while the classical CAN data field is used to convey the specific group subfunctions. These group functions require many different interpretations based on the classical CAN data field.

5.2.8.2 Data greater than 8 byte

When more than 8 data bytes are needed to express a given parameter group, the communication of these data are done in multiple classical CAN data frames. The term multi-packet is used to describe this type of parameter group. A parameter group defined as being multi-packet capable, having less than nine data bytes to transfer in a specific instance, shall be sent in a single classical CAN data frame with the DLC set to 8. When a particular parameter group has nine or more data bytes to transfer, then one of the transport protocol functions are used. The transport function connection management capability is used to set up and close out the communication of the multi-packet parameter groups. The transport protocol data transfer capability is used to communicate the data itself in a series of classical CAN data frames (packets) containing the "packetized" data. Additionally, the transport protocol function provides flow control and handshaking capabilities for destination-specific transfers (see 5.10).

All classical CAN data frames associated with a particular multi-packet response shall have a DLC of 8. All unused data bytes are set to "Not Available". The number of bytes per packet is fixed; however, ISO 11783 defines multi-packet messages that have a variable and or fixed number of packets. The

© ISO 2018 – All rights reserved
Documents
Document Sharing Hub
Full document details: BS ISO 11783-3:2018

PGN for active diagnostic codes is an example of a multi-packet message that has a variable number of packets. Parameter groups that are defined as multi-packet only use the transport protocol when the number of data bytes to be sent exceeds eight in number.

5.3 Protocol data unit (PDU) formats

5.3.1 General

The available PDU formats, illustrated in Figure 5, are defined as PDU1 (PS = DA) and PDU2 (PS = GE). PDU1 allows for direction of the classical CAN data frame to a specific destination address (control function); PDU2 only communicates classical CAN data frames that are not destination-specific. Two separate PDU formats are created to provide more possible parameter group number combinations while still providing for destination-specific communications. Proprietary parameter group definitions are assigned so that both PDU formats can be used for proprietary communications. A standardized method for proprietary communications is defined to prevent possible conflicts in identifier usage.

The definition of proprietary Parameter Group Numbers has been established allowing both PDU1 and PDU2 Formats to be used. The interpretation of the proprietary information varies by manufacturer.

	Priority,	EDP,	DP,	PF,	PS(DA),	SA,	Data
No. of bits	...3...,	...1...,	...1...,	...8...,	...8...,	...8...,	...64...

a) PDU1

	Priority,	EDP,	DP,	PF,	PS(GE),	SA,	Data
No. of bits	...3...,	...1...,	...1...,	...8...,	...8...,	...8...,	...64...,

b) PDU2

Figure 5 — Available PDU formats

5.3.2 PDU1 format

The PDU1 format provides for applicable parameter groups to be sent to either specific or global destination(s). The PS field contains a DA.

PDU1 format messages can be requested or sent as unsolicited messages.

PDU1 format messages are determined by the PF field. When the value of that field is 0 to 239, the message is in the PDU1 format. The format of the PDU1 message is illustrated by Figure 5. See also Figure 6.

© ISO 2018 – All rights reserved

Documents
Document Sharing Hub
Full document details: BS ISO 11783-3:2018

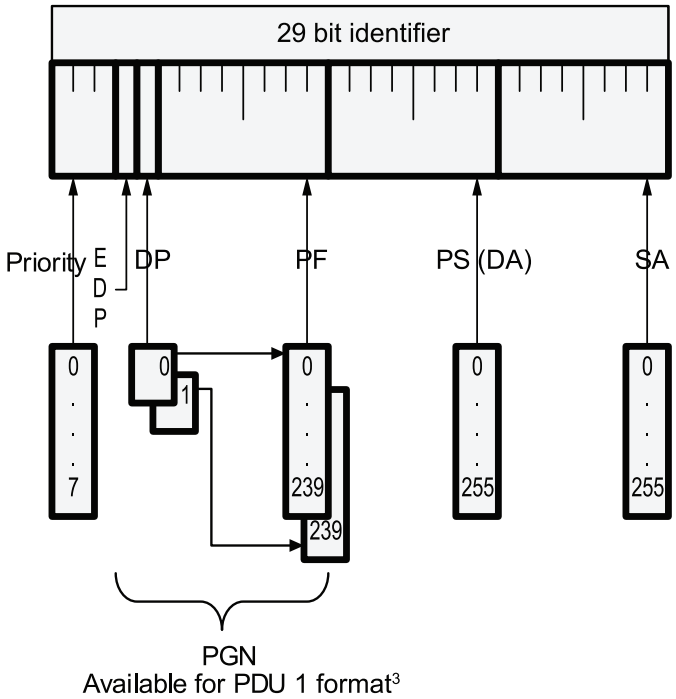

a Currently, 2 × 240 = 480.

Figure 6 — PDU1 format

Parameter groups requiring a destination (PDU1) and minimal latency start at PF = 0 and increment towards x (or x1).

Parameter groups requiring a destination where latency is not critical start at PF = 239 and decrement towards x (or x1).

See Table 7.

A PF equal to 239 (Extended Data Page bit = 0 and Data Page bit = 0) is assigned for proprietary use. In this case the PS field is a destination address (see 5.4.6). The PGN for Proprietary A is 61 184.

5.3.3 PDU2 format

The PDU2 format can only be used to communicate parameter groups as global messages. PDU2 format messages can be requested or sent as unsolicited messages. Selection of the PDU2 format at the time a PGN is assigned prevents that PGN from ever being able to be directed to a specific destination. The PS field contains a GE.

PDU2 format messages are defined as being those where the PF value is equal to 240 to 255. The format of the PDU2 message is illustrated by Figure 5. Also see Figure 7.

© ISO 2018 – All rights reserved
Documents
Document Sharing Hub
Full document details: BS ISO 11783-3:2018

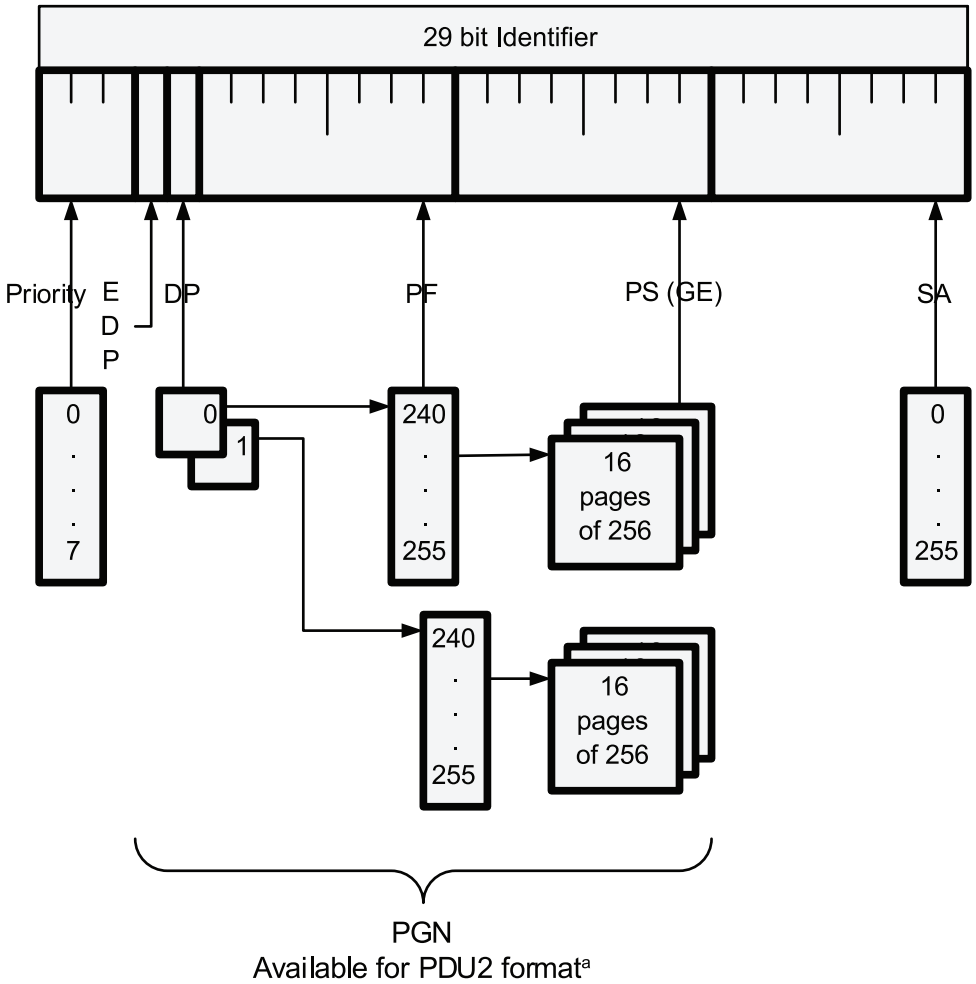

[a] Currently, 2 × 16 × 256 = 8 192.

Figure 7 — PDU2 format

The PGN of messages that are sent at fast update rates (generally less than 100 ms) start at PF = 240 and increment towards y (or y1).

The PGN of messages that are only requested, sent on change, or are sent at slow update rates (generally greater than 100 ms) start at PF = 254 and decrement towards y (or y1).

See Table 7.

A PF equal to 255 (Extended Data Page bit = 0 and Data Page bit = 0) is assigned for proprietary use. The PS field is left to be defined and used by each manufacturer (see 5.4.6). The PGN for Proprietary B covers the range 65 280 to 65 535.

5.4 Message types

5.4.1 General

There are five message types currently supported:

— Commands;

— Requests;

© ISO 2018 – All rights reserved

Documents
Document Sharing Hub
Full document details: BS ISO 11783-3:2018

— Broadcasts/Responses;

— Acknowledgements;

— Group Functions.

The specific message type is recognized by its assigned PGN. The RTR bit (defined in the CAN protocol for remote frames) is not to be used in the recessive state (logical 1). Therefore, Remote Transmission Request (RTR = 1) is not available for use in the ISO 11783 network.

RTR was meant to "request" a specific CAN object by simply announcing its CAN identifier on the network without any data bytes. Since ISO 11783 uses part of the CAN identifier for message priority and part of it for source address, this mechanism will cause conflicts. A device is not allowed to send a message with another device's SA. A separate request mechanism exists in ISO 11783. See 5.4.3.

Multi-byte parameters that appear in the data field of a classical CAN data frame shall be placed LSB first. Exceptions are noted where applicable (i.e. ASCII data). If a 2 byte parameter were to be placed in Bytes 7 and 8 of the classical CAN data frame, the LSB would be placed in Byte 7 and the MSB in Byte 8.

5.4.2 Command

The command message type categorizes those parameter groups that command a specific or global destination from a source. The destination is then supposed to take specific actions based on the reception of this command message type. Both PDU1 (PS = DA) and PDU2 format (PS = GE) messages can be used for commands. Example command modes include Transmission Control, Address Request and Torque/Speed Control.

5.4.3 Request

The Request message type, identified by the PGN, provides the ability to request information globally or from a specific destination. Requests specific to one destination are known as *destination-specific* requests. The information below assigns a PGN to the Request PGN parameter group. The information is in the same format as parameter group definitions in ISO 11783.

Parameter group name:	REQUEST
Definition:	used to request a parameter group from a network control function or control functions
Transmission repetition rate:	per user requirements, generally recommended that requests occur no more than two or three times per second
Data length:	3 byte (The classical CAN frame for this PG shall set the DLC to 3)
Data page:	0
PF:	234
PS:	DA (global or specific)
Default priority:	6
Parameter group number:	59 904 ($00EA00_{16}$)
Bytes:1, 2, 3	PGN being requested (see 5.1.3 for field definition and byte order)

Table 5 lists the request/response possibilities for PDU1 and PDU2 format PGN. It clarifies that the originating control function of a message determines whether the destination is specific or global, based on whether the request was to a specific or global DA. Table 5 also illustrates that, for unsolicited messages, the originating control function can transmit to a specific or global DA for PDU1 and PDU2

© ISO 2018 – All rights reserved
Documents
Document Sharing Hub
Full document details: BS ISO 11783-3:2018