BS ISO 11898-1:2024

BSI Standards Publication

Road vehicles — Controller area network (CAN)

Part 1: Data link layer and physical coding sublayer

Documents
Document Sharing Hub

Full document details: BS ISO 11898-1:2024

National foreword

This British Standard is the UK implementation of ISO 11898-1:2024. It supersedes BS ISO 11898-1:2015, which is withdrawn.

The UK participation in its preparation was entrusted to Technical Committee AUE/16, Data Communication (Road Vehicles).

A list of organizations represented on this committee can be obtained on request to its committee manager.

Contractual and legal considerations

This publication has been prepared in good faith, however no representation, warranty, assurance or undertaking (express or implied) is or will be made, and no responsibility or liability is or will be accepted by BSI in relation to the adequacy, accuracy, completeness or reasonableness of this publication. All and any such responsibility and liability is expressly disclaimed to the full extent permitted by the law.

This publication is provided as is, and is to be used at the recipient's own risk.

The recipient is advised to consider seeking professional guidance with respect to its use of this publication.

This publication is not intended to constitute a contract. Users are responsible for its correct application.

© The British Standards Institution 2024
Published by BSI Standards Limited 2024

ISBN 978 0 539 25714 4

ICS 43.040.15

Compliance with a British Standard cannot confer immunity from legal obligations.

This British Standard was published under the authority of the Standards Policy and Strategy Committee on 31 May 2024.

Amendments/corrigenda issued since publication

Date	Text affected

Documents
Document Sharing Hub

Full document details: BS ISO 11898-1:2024

International Standard

ISO 11898-1

Third edition
2024-05

Road vehicles — Controller area network (CAN) —

Part 1: Data link layer and physical coding sublayer

Véhicules routiers — Gestionnaire de réseau de communication (CAN) —

Partie 1: Couche liaison de données et sous-couche de codage physique

Reference number
ISO 11898-1:2024(en)

© ISO 2024

Documents
Document Sharing Hub

Full document details: BS ISO 11898-1:2024

COPYRIGHT PROTECTED DOCUMENT

© ISO 2024

All rights reserved. Unless otherwise specified, or required in the context of its implementation, no part of this publication may be reproduced or utilized otherwise in any form or by any means, electronic or mechanical, including photocopying, or posting on the internet or an intranet, without prior written permission. Permission can be requested from either ISO at the address below or ISO's member body in the country of the requester.

ISO copyright office
CP 401 • Ch. de Blandonnet 8
CH-1214 Vernier, Geneva
Phone: +41 22 749 01 11
Email: copyright@iso.org
Website: www.iso.org

Published in Switzerland

Documents
Document Sharing Hub
Full document details: BS ISO 11898-1:2024

Contents

Page

Foreword ... **v**
Introduction ... **vi**
1 Scope ... **1**
2 Normative references ... **1**
3 Terms and definitions ... **1**
4 Symbols and abbreviated terms ... **6**
5 Basic concepts of CAN ... **8**
5.1 CAN properties ... 8
5.2 Frame transmissions ... 9
5.3 Bus access method ... 11
5.4 Information routing ... 11
5.5 Network flexibility ... 11
5.6 Remote data request ... 11
5.7 Error detection ... 11
5.8 Error signalling and recovery time ... 11
5.9 Fault confinement ... 12
5.10 Error-active ... 12
5.11 Error-passive ... 12
5.12 Bus-off ... 12
5.13 ACK ... 12
5.14 Repetition of transmission attempts ... 12
5.15 Network-wide data consistency ... 12
5.16 Switchable operating modes of the PMA ... 13
5.17 Bus states and MAC sub-layer phases ... 13
6 CAN DLL specification ... **14**
6.1 General ... 14
6.2 Time stamping ... 14
6.3 DLL protocol ... 14
6.4 LLC sub-layer ... 15
6.4.1 Overview ... 15
6.4.2 Notifications ... 16
6.4.3 Structure of LLC frames ... 16
6.4.4 Limited LLC frames ... 17
6.4.5 Services of LLC sub-layer ... 17
6.5 Functions of the LLC sub-layer ... 21
6.5.1 General ... 21
6.5.2 Flow control on re-arbitration ... 21
6.5.3 Flow control on retransmission ... 21
6.5.4 Frame acceptance filtering ... 22
6.5.5 Overload notification ... 22
6.5.6 Recovery management ... 22
6.5.7 Time stamping ... 22
6.6 MAC sub-layer ... 23
6.6.1 Functions and rules ... 23
6.6.2 Services of the MAC sub-layer ... 23
6.6.3 Time reference points ... 23
6.6.4 Functional model of MAC sub-layer architecture ... 23
6.6.5 Specification of EF ... 27
6.6.6 Specification of OF ... 28
6.6.7 Inter-frame space specification ... 28
6.6.8 SOF ... 30
6.6.9 Elements of the MAC frame ... 30
6.6.10 MAC frame in CBFF and CEFF ... 31

© ISO 2024 – All rights reserved

Documents
Document Sharing Hub
Full document details: BS ISO 11898-1:2024

6.6.11 MAC frame in FBFF and FEFF 33
6.6.12 MAC frame in XLFF 37
6.6.13 MAC frame coding 42
6.6.14 Data frame acknowledgement 43
6.6.15 Frame validation 43
6.6.16 Order of bit transmission 43
6.6.17 Medium access method 43
6.6.18 MAC data consistency 45
6.6.19 Restricted operation 45
6.6.20 Bus monitoring 45
6.6.21 Error handling and overload handling 45

7 PL specifications 49
7.1 General and functional modelling 49
7.2 Services of the PCS interface 50
7.2.1 Requirements 50
7.2.2 PCS_Data.Request 50
7.2.3 PCS_Data.Indicate 50
7.2.4 PCS_Mode.Request 50
7.2.5 PCS_Status.Transmitter 51
7.2.6 PCS_Status.Receiver 51
7.3 PCS 51
7.3.1 Bit encoding/decoding 51
7.3.2 Bit time 51
7.3.3 Configuration of the bit time parameters 55
7.3.4 Transmitter delay compensation 56
7.3.5 Synchronization 58
7.3.6 Tolerance range of the oscillator frequencies 60
7.4 Attachment unit interface 61
7.4.1 General 61
7.4.2 PCS to PMA symbols 61
7.4.3 PMA to PCS symbol 62
7.5 PWM encoding 62
7.5.1 General function and definitions 62
7.5.2 PCS without PWM encoding 63
7.5.3 PCS sub-layer with PWM encoding 63

8 Description of supervisor FCE 66
8.1 Fault confinement 66
8.1.1 Objectives 66
8.1.2 Strategies 66
8.1.3 Fault confinement interface specification 66
8.1.4 Rules of fault confinement 69
8.1.5 Node start-up 71
8.2 Bus failure management 71

Annex A (normative) **CAN FD light — Data link layer and physical coding sub-layer requirements of responder nodes 72**

Annex B (informative) **Configuration interface 80**

Annex C (informative) **Additional information 81**

Bibliography 82

© ISO 2024 – All rights reserved

Documents
Document Sharing Hub
Full document details: BS ISO 11898-1:2024

Foreword

ISO (the International Organization for Standardization) is a worldwide federation of national standards bodies (ISO member bodies). The work of preparing International Standards is normally carried out through ISO technical committees. Each member body interested in a subject for which a technical committee has been established has the right to be represented on that committee. International organizations, governmental and non-governmental, in liaison with ISO, also take part in the work. ISO collaborates closely with the International Electrotechnical Commission (IEC) on all matters of electrotechnical standardization.

The procedures used to develop this document and those intended for its further maintenance are described in the ISO/IEC Directives, Part 1. In particular, the different approval criteria needed for the different types of ISO document should be noted. This document was drafted in accordance with the editorial rules of the ISO/IEC Directives, Part 2 (see www.iso.org/directives).

ISO draws attention to the possibility that the implementation of this document may involve the use of (a) patent(s). ISO takes no position concerning the evidence, validity or applicability of any claimed patent rights in respect thereof. As of the date of publication of this document, ISO had received notice of (a) patent(s) which may be required to implement this document. However, implementers are cautioned that this may not represent the latest information, which may be obtained from the patent database available at www.iso.org/patents. ISO shall not be held responsible for identifying any or all such patent rights.

Any trade name used in this document is information given for the convenience of users and does not constitute an endorsement.

For an explanation of the voluntary nature of standards, the meaning of ISO specific terms and expressions related to conformity assessment, as well as information about ISO's adherence to the World Trade Organization (WTO) principles in the Technical Barriers to Trade (TBT), see www.iso.org/iso/foreword.html.

This document was prepared by Technical Committee ISO/TC 22, *Road vehicles*, Subcommittee SC 31, *Data communication*.

This third edition cancels and replaces the second edition (ISO 11898-1:2015), which has been technically revised.

The main changes are as follows:

— CAN XL requirements added;

— CAN FD light protocol (Annex A) requirements added;

— editorial corrections.

A list of all parts in the ISO 11898 series can be found on the ISO website.

Any feedback or questions on this document should be directed to the user's national standards body. A complete listing of these bodies can be found at www.iso.org/members.html.

© ISO 2024 – All rights reserved

Documents
Document Sharing Hub
Full document details: BS ISO 11898-1:2024

Introduction

The ISO 11898 series provides requirement specifications for the controller area network (CAN) data link layer and physical layer. It is intended for chip implementers, e.g. this document can be used for CAN protocol controllers and ISO 11898-2 for CAN transceivers. The CAN data link layer models the open systems interconnection (OSI) data link layer; it is internally subdivided into logic link control (LLC) and medium access control (MAC). This document also specifies the physical coding sub-layer (PCS) by means of the attachment unit interface (AUI). The PCS also provides the pulse-with modulation (PWM) encoding to be linked to a CAN SIC XL transceiver, which provides the PWM decoding.

The OSI layers above the data link layer (e.g. the network layer) are not specified in the ISO 11898 series of specifications.

Figure 1 shows the relationship between the OSI layers and the CAN sub-layers.

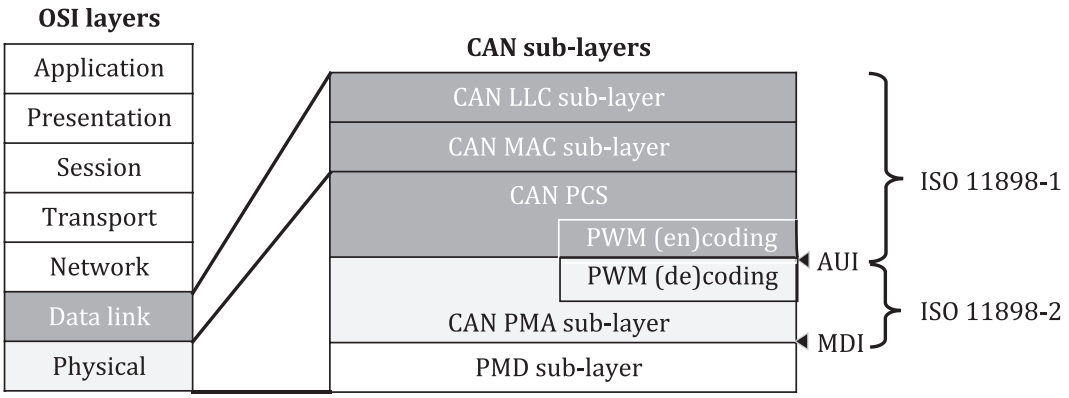

Key

AUI attachment unit interface
LLC logic link control
MAC medium access control
MDI medium dependent interface
PCS physical coding sub-layer
PMA physical medium attachment
PMD physical medium dependent
PWM pulse-width modulation

Figure 1 — CAN data link and physical sub-layers in relation to the OSI model

© ISO 2024 – All rights reserved

Documents
Document Sharing Hub
Full document details: BS ISO 11898-1:2024

Road vehicles — Controller area network (CAN) —

Part 1:
Data link layer and physical coding sublayer

1 Scope

This document specifies the controller area network (CAN) data link layer (DLL) and the physical coding sub-layer (PCS). The CAN DLL features data fields of up to 2048 byte when the CAN extended data field length (XL) frame format is used.

This document divides the CAN DLL into the logical link control (LLC) and the medium access control (MAC) sub-layers. The DLL's service data unit (SDU), which interfaces the LLC and the MAC, is implemented by means of the LLC frame. The LLC frame also features the service data unit type (SDT) and the virtual CAN channel identifier (VCID), which provide higher-layer protocol configuration and identification information. How the higher-layer functions are handled is not specified in this document. There are five implementation options:

1 support of the CAN classic frame format only, not tolerating the CAN flexible data rate (FD) frame format;

2 support of the CAN classic frame format and tolerating the CAN FD frame format;

3 support of the CAN classic frame format and the CAN FD frame format;

4 support of the CAN classic frame format, the CAN FD frame format and the CAN XL frame format;

5 support of the CAN FD frame format for CAN FD light responders (Annex A).

NOTE Nodes of the first option can communicate with nodes of the third and fourth option when only the CAN classic frame format is used. Nodes of the first option cannot communicate with nodes of the fifth option: any attempt at communication generates error frames. Therefore, new designs implementing the fourth option can communicate with all other nodes.

2 Normative references

There are no normative references in this document.

3 Terms and definitions

For the purposes of this document, the following terms and definitions apply.

ISO and IEC maintain terminology databases for use in standardization at the following addresses:

— ISO Online browsing platform: available at https://www.iso.org/obp

— IEC Electropedia: available at https://www.electropedia.org/

3.1
arbitration mode
operating mode of the physical coding sub-layer (PCS) in which it is allowed that dominant bits can overwrite recessive bits

© ISO 2024 – All rights reserved

Documents
Document Sharing Hub
Full document details: BS ISO 11898-1:2024

3.2
arbitration phase
phase in which the *nominal bit time* (3.42) is used

3.3
attachment unit interface
AUI
interface between the physical coding sub-layer (PCS) and the physical medium attachment (PMA) sub-layer

3.4
bit stuffing
frame coding method providing *bus state* (3.8) changes required for periodic resynchronization when using a *non-return-to-zero* (NRZ) (3.43) bit representation

Note 1 to entry: Two types of bit stuffing exist: dynamic bit stuffing and fixed bit stuffing. The *transmitter* (3.54) adds stuff bits into the outgoing bit stream and *receivers* (3.48) de-stuff the *data frames* (3.16) and the *remote frames* (3.49) i.e. the inverse procedure is carried out.

3.5
bus
shared medium of any topology

3.6
bus comparator
physical coding attachment comparator
electronic circuit converting analogue signals used for transfer across the communication medium back into digital signals

3.7
bus driver
electronic circuit converting digital signals into analogue signals so that these signals can be transferred across the communication medium, i.e. the *bus* (3.5)

3.8
bus state
one of two complementary logical states: dominant or recessive

Note 1 to entry: The dominant state represents the logical 0, and the recessive state represents the logical 1. This document uses the terms "dominant" and "recessive" for the bit values of the medium access control (MAC) frame, independent of the *transceiver mode* (3.53). When no transmission is in progress, the *bus* (3.5) is *idle* (3.33). During idle time, it is in recessive state.

3.9
bus-off
state of a *node* (3.39) in which it does not influence the *bus* (3.5)

3.10
classic base frame format
CBFF
format for *data frames* (3.16) or *remote frames* (3.49) using an 11-bit *identifier* (3.31) and which are transmitted with one single bit rate and up to and including eight data bytes

3.11
classic extended frame format
CEFF
format for *data frames* (3.16) or *remote frames* (3.49) using a 29-bit *identifier* (3.31) and which are transmitted with one single bit rate and up to and including eight data bytes

3.12
classic frame
data frame (3.16) or *remote frame* (3.49) using the *CC base frame format* (3.10) or the *classic extended frame format* (3.11)

© ISO 2024 – All rights reserved

Documents
Document Sharing Hub
Full document details: BS ISO 11898-1:2024

3.13
commander node
node (3.39) that sends data frames to *responder nodes* (3.50) to initiate a controller area network (CAN) *FD light* (3.26) communication

3.14
data bit rate
number of bits per time during *data phase* (3.17), independent of bit encoding/decoding

3.15
data bit time
duration of one bit in *data phase* (3.17), defined by a number of data time quanta in the bit

3.16
data frame
DF
frame (3.28) containing application content

3.17
data phase
phase in which the *data bit time* (3.15) is used

3.18
data RX mode
operating mode of the physical medium attachment (PMA) sub-layer in which the *bus states* (3.8) can be different from the bus states in the *arbitration mode* (3.1)

3.19
data TX mode
operating mode of the physical medium attachment (PMA) sub-layer in which it can drive the *bus states* (3.8) differently than it drives them in the *arbitration mode* (3.1)

3.20
edge
difference in *bus states* (3.8) between two consecutive time quanta

3.21
error frame
EF
frame (3.28) indicating the detection of an error condition

3.22
FD base frame format
FBFF
format for *data frames* (3.16) using an 11-bit *identifier* (3.31), which can be transmitted with a flexible bit rate

3.23
FD enabled
able to receive and to transmit *FD frames* (3.25) as well as *CC frames* (3.12)

3.24
FD extended frame format
FEFF
format for *data frames* (3.16) using a 29-bit *identifier* (3.31), which can be transmitted with a flexible bit rate

3.25
FD frame
data frame (3.16) using the *FD base frame format* (3.22) or *FD extended frame format* (3.24)

© ISO 2024 – All rights reserved

Documents
Document Sharing Hub
Full document details: BS ISO 11898-1:2024

3.26
FD light
implementation option for a *responder node* (3.50) that is based on a subset of the controller area network (CAN) functionality.

3.27
FD tolerant
not able to receive or to transmit *FD frames* (3.25), but not disturbing them

3.28
frame
protocol data unit of the data link layer specifying the arrangement and meaning of bits or bit fields in the sequence of transfer across the transmission medium

3.29
handle
label of one or multiple logical link control (LLC) frames, or data link layer service data units (LSDU), the data link layer (DLL)'s interface data coming from the higher open systems interconnection (OSI) layers (network layer or transport layer)

3.30
higher-layer protocol
HLP
protocol (3.46) above the data link layer protocol, e.g. transport layer protocol or network layer protocol according to the open system interconnection model

3.31
identifier
ID
unique label reflecting the *priority* (3.45) of a particular *frame* (3.28)

3.32
identifier-based arbitration
carrier sense multiple access/collision resolution arbitration procedure resolving *bus* (3.5) contention when multiple *nodes* (3.39) simultaneously access the bus

3.33
idle
operating condition of the *bus* (3.5) after the completion of a *frame* (3.28) until the next frame starts

3.34
idle condition
detection of a consecutive sequence of 11 sampled recessive bits

3.35
integrating
status of a *node* (3.39) waiting on an *idle condition* (3.34) after starting the protocol operation during *bus-off* (3.9) recovery or after a *protocol exception event* (3.47)

3.36
minimum time quantum
smallest time quantum that can be configured for the specific *node* (3.39)

3.37
multi master
network with several nodes where every *node* (3.39) is allowed to start sending a *frame* (3.28) when the controller area network (CAN) *bus* (3.5) is *idle* (3.33)

© ISO 2024 – All rights reserved

Documents
Document Sharing Hub
Full document details: BS ISO 11898-1:2024

3.38
multicast
address method transmitting a single *frame* (3.28) to a group of *nodes* (3.39)

Note 1 to entry: A broadcast is a special case of multicast, whereby a single frame is addressed to all nodes simultaneously.

3.39
node
assembly, linked to a communication network, capable of communicating across the network according to a communication protocol specification (a node can be in one of four states: *integrating* (3.35), *idle* (3.33), *receiver* (3.48), or *transmitter* (3.54))

Note 1 to entry: A node operating in a controller area network (CAN) is called a CAN node.

3.40
node clock
time base to coordinate the bit-time-related state machines in controller area network (CAN) *nodes* (3.39)

3.41
nominal bit rate
number of bits per time during an *arbitration phase* (3.2), independent of the bit-encoding/decoding

3.42
nominal bit time
duration of one bit in an *arbitration phase* (3.2), defined by a number of nominal time quanta in the bit

3.43
non-return-to-zero
NRZ
method of representing binary signals, i.e. within one and the same bit time, the signal level does not change, where a stream of bits having the same logical value provides no *edges* (3.20)

3.44
overload frame
OF
frame (3.28) indicating an overload condition

3.45
priority
attribute to a *data frame* (3.16) and to a *remote frame* (3.49) controlling its ranking during the arbitration

Note 1 to entry: A high priority increases the probability that a data frame or a remote frame wins the arbitration process. Further details are given in 6.6.17.5.

3.46
protocol
formal set of conventions or rules for the exchange of information between *nodes* (3.39), including the specification of frame administration, frame transfer and physical medium attachment (PMA)

3.47
protocol exception event
either exception from the formal set of conventions or rules to be able to tolerate future new frame formats, or reaction to errors when controller area network (CAN) XL is used with error signalling disabled

3.48
receiver
node (3.39) that, while the *bus* (3.5) is not *idle* (3.33), is neither transmitting nor *integrating* (3.35)

© ISO 2024 – All rights reserved

Documents
Document Sharing Hub
Full document details: BS ISO 11898-1:2024

3.49
remote frame
RF
frame (3.28) that requests the transmission of a dedicated *data frame* (3.16)

3.50
responder node
node (3.39) that is controlled by a *commander node* (3.13) using controller area network (CAN) *FD light* (3.26) communication

3.51
stuff bit count
SBC
number of stuff bits in a *frame* (3.28) before the cyclic redundancy check (CRC) field, not including fixed stuff bits

3.52
transceiver
electronic circuit, implementing the physical medium attachment (PMA) sub-layer, that connects controller area network (CAN) *nodes* (3.39) to a CAN *bus* (3.5) consisting of a *bus comparator* (3.6) and a *bus driver* (3.7)

3.53
transceiver mode
operating mode of the physical medium attachment (PMA) sub-layer

3.54
transmitter
node (3.39) sending a *data frame* (3.16) or a *remote frame* (3.49)

Note 1 to entry: A node remains a transmitter until the *bus* (3.5) is *idle* (3.33) again or until the node loses arbitration.

3.55
XL frame
data frame (3.16) using the *XL frame format* (3.56)

3.56
XL frame format
XLFF
format for *data frames* (3.16) using an 11-bit *identifier* (3.31), including up to 2048 data bytes, where the bit rate is switched at the beginning and at the end of the *data phase* (3.17)

4 Symbols and abbreviated terms

For the purposes of this document, the following symbols and abbreviated terms apply.

ACK	acknowledgement
ADH	arbitration to data high
ADS	arbitration to data sequence
AF	acceptance field
AH1	arbitration high 1
AH2	arbitration high 2
AL1	arbitration low 1
BCH code	Bose-Chaudhuri-Hocquenghem code

© ISO 2024 – All rights reserved

Documents
Document Sharing Hub
Full document details: BS ISO 11898-1:2024

BRS	bit rate switch
CAN	controller area network
CC	classic
CRC	cyclic redundancy check
DAH	data arbitration high
DAS	data to arbitration sequence
DF	data frame
DH	data high bit
DL	data low bit
DLC	data length code
DLL	data link layer
EOF	end of frame
ESI	error state indicator
FCE	fault confinement entity
FCP	format check pattern
FCRC	frame CRC
FD	flexible data rate
FDF	flexible data rate format indicator
FTYP	frame type
IDE	identifier extension
IPT	information processing time
LLC	logical link control
LME	layer management entity
LPDU	logical link control protocol data unit
LSB	least significant bit
LSDU	logical link control service data unit
MAC	medium access control
MPDU	medium access control protocol data unit
MSB	most significant bit
nCRC	order of the generated polynomia
NRZ	non-return-to-zero

© ISO 2024 – All rights reserved

Documents
Document Sharing Hub
Full document details: BS ISO 11898-1:2024

OF	overload frame
OSI	open systems interconnection
PCRC	preface cyclic redundancy check
PCS	physical coding sub-layer
PDU	protocol data unit
PL	physical layer
PMA	physical medium attachment
PMD	physical medium dependent
PWM	pulse width modulation
PWML	pulse width modulation long phase
PWMO	pulse width modulation offset time
PWMS	pulse width modulation short phase
resXL	reserved bit extended data field length format
RRS	remote request substitution
RTR	remote transmission request
SDT	service data unit type
SDU	service data unit
SEC	simple/extended content
SIC	signal improvement capability
SJW	synchronization jump width
SOF	start of frame
SSP	secondary sample point
t_q	time quantum/time quanta
$t_{q.min}$	minimum time quantum
VCID	virtual controller area network channel identifier
XL	extended data field length
XLF	extended data field length format indicator

5 Basic concepts of CAN

5.1 CAN properties

A CAN has the following properties:

— multi-master priority-based bus access;

© ISO 2024 – All rights reserved

Documents
Document Sharing Hub
Full document details: BS ISO 11898-1:2024

— non-destructive content-based arbitration;

— all frame transfers are done as broadcast;

— multicast frame transfer by acceptance filtering;

— remote data request;

— configuration flexibility;

— error detection and error signalling;

— distinction between temporary errors and permanent failures of nodes and autonomous switching-off of defective nodes;

— retransmission of frames that lose bus arbitration, are not acknowledged, or are invalided by errors;

— network-wide data consistency.

The following properties can be omitted by configuration: retransmission, error signalling, network-wide data consistency and remote data request.

A subset of the CAN FD data link layer may be implemented as a CAN FD light responder node. Annex A shall be followed when a CAN FD light responder node is implementing a subset of the CAN FD data link layer.

Configuration options for CAN implementations are described in Annex B.

The differences between implementation options are described in Annex C.

5.2 Frame transmissions

The DLL sends different frames: data frames (DF), remote frames (RF), error frames (EF) and overload frames (OF). When the bus is idle, a CAN node may start the transmission of a DF or an RF. The bus is idle when no frame is transmitted. A node starts to send an EF or an OF when an error condition or an overload condition, respectively, is detected by the node.

Figure 2 shows the DFs and RFs specified in this document. This figure is also provided in electronic form at: https://standards.iso.org/iso/11898/-1/ed-3/en.

© ISO 2024 – All rights reserved

Documents
Document Sharing Hub
Full document details: BS ISO 11898-1:2024

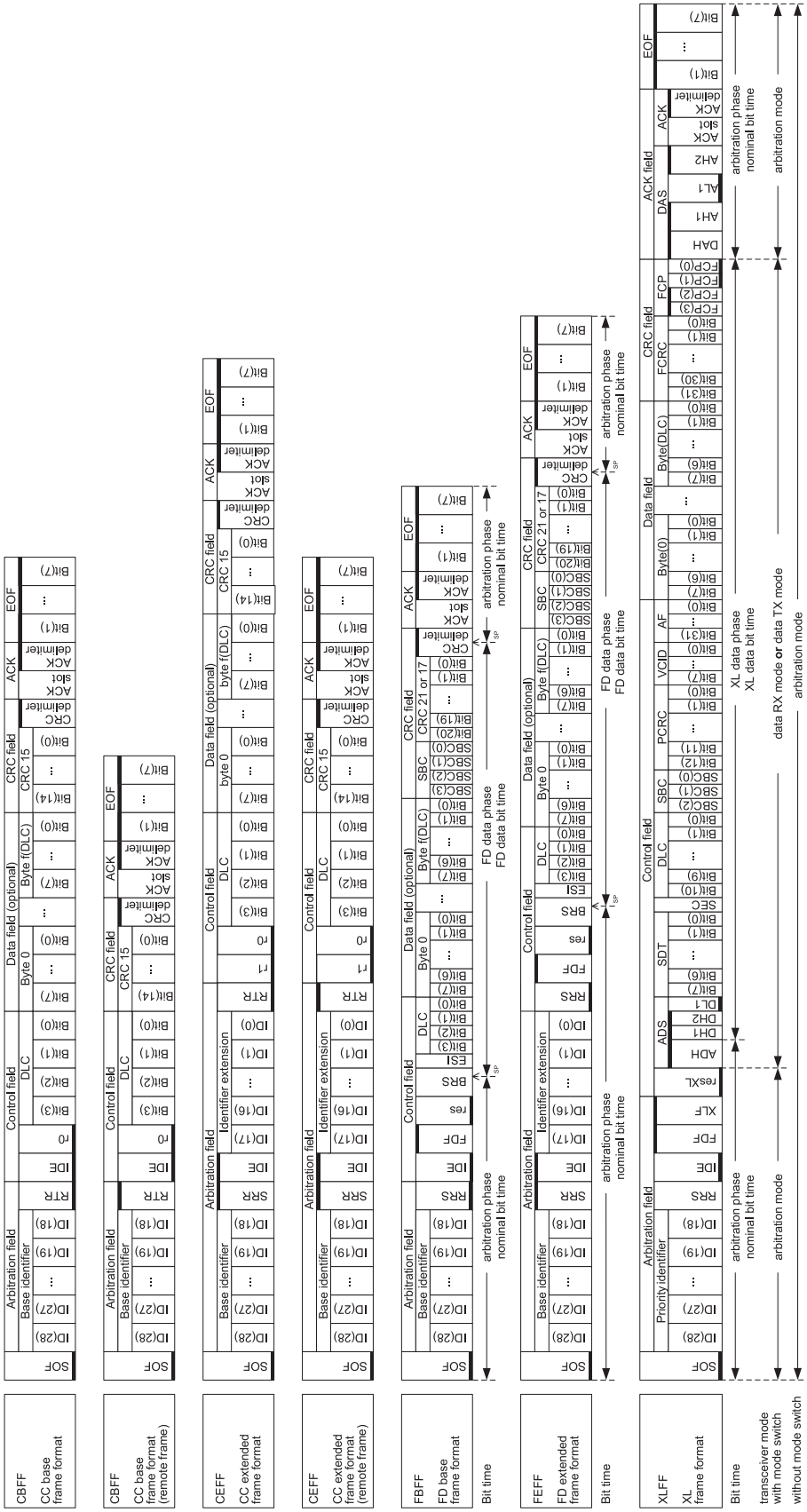

Figure 2 — CAN frame formats

NOTE Whether the FDF bit in FBFF and FEFF take part in arbitration or not, is specified in 6.6.11.

© ISO 2024 – All rights reserved

Full document details: BS ISO 11898-1:2024

5.3 Bus access method

If two or more nodes start to transmit DFs or RFs at the same time, the bus access conflict is resolved by arbitration using the identifier. The mechanism of arbitration ensures that neither information nor time is lost. The transmitter with the DF or RF of the highest priority gains the bus access. A DF with the same ID as an RF wins bus arbitration.

5.4 Information routing

Receivers accept or do not accept information based upon a process called frame acceptance filtering, which decides whether the received information is relevant or not. There is no need for receivers to know the transmitter of the information and vice versa.

5.5 Network flexibility

Nodes can be added to the network without requiring any change in the software or hardware of any node, if the added node is not the transmitter of any DF and if the added node does not require any additional transmitted data.

5.6 Remote data request

By sending an RF, a node requiring data requests another node to send the corresponding DF: the RF and the corresponding DF are named by the same identifier and using the same DLC.

NOTE 1 The node providing the remotely requested DF (same ID) decides whether the updated data is mapped into the DF or the data in the transmit buffer is sent.

NOTE 2 The node providing the remotely requested DF (same ID) decides how to respond to an RF with mismatching DLC.

5.7 Error detection

For detecting errors, the following measures are provided:

— monitoring (transmitters compare the transmitted bit levels with the bit levels detected on the network);

— 15-bit CRC for CC frames, 17-bit CRC for FD frames with up to 16 data-field bytes, 21-bit CRC for FD Frames with 20 to 64 data-field bytes,13-bit PCRC and 32-bit frame CRC for XL frames;

— stuff bit count check for FD frames and XL frames;

— dynamic bit stuffing with a stuff width of five (except in the CRC field of FD frames and after the arbitration field of XL frames);

— fixed bit stuffing with a stuff rate of 5 (used in the FD CRC field);

— fixed bit stuffing with a stuff rate of 11 (used in the XL data phase);

— frame format check;

— ACK check.

5.8 Error signalling and recovery time

Corrupted frames are flagged by transmitting nodes and by error-active receiving nodes. Such frames are aborted and retransmitted according to the implemented recovery procedure (see 6.6.21). The recovery time from detecting an error until the possible start of the next frame is 17 to 23 nominal bit times (in the case of nodes in error passive mode up to 31 nominal bit times) if there are no further errors.

© ISO 2024 – All rights reserved

Documents
Document Sharing Hub
Full document details: BS ISO 11898-1:2024

For CAN XL nodes, error signalling depends on the node configuration. It can be enabled or disabled as specified in 6.6.21.1. If error signalling is disabled, the node does not send EFs or OFs. The node reacts on error conditions and overload conditions as specified in 6.6.21.4.

NOTE Nodes with disabled error signalling are not interoperable with CAN nodes with enabled error signalling.

5.9 Fault confinement

CAN nodes can distinguish short disturbances from permanent failures. Defective transmitting nodes are switched off. Switched off means a node is logically disconnected from the bus, so that it can neither send nor receive frames (see 8.2).

5.10 Error-active

An error-active node takes part in network communication and sends an active error flag when an error is detected. The active error flag consists of six consecutive dominant bits and violates the rule of bit-stuffing and all fixed formats appearing in a DF and RF (see 8.2).

5.11 Error-passive

An error-passive node sends no active error flag. It takes part in network communication, but when an error is detected a passive error flag is sent. The passive error flag consists of six consecutive recessive bits. After transmission, an error-passive node waits additional time before initiating a further transmission (see suspend transmission in 6.6.7.4 and 8.2).

Nodes with disabled error signalling do not enter error-passive state.

5.12 Bus-off

A node is in the bus-off state when it is switched off from the bus due to an FCE request. In the bus-off state, a node neither sends nor receives frames. In the bus-off state, a node does not send any dominant bits.

Nodes with disabled error signalling do not enter bus-off state.

5.13 ACK

Receivers check the consistency of the received DFs and RFs, acknowledge a consistent frame and, when error signalling is enabled, flag an inconsistent frame by means of an EF.

5.14 Repetition of transmission attempts

The transmission of a DF or RF losing arbitration is automatically restarted (re-arbitration). The number of automatic retransmissions of DFs or RFs that are not transmitted successfully by any reason, except the loss of bus arbitration, can be configurable to a dedicated number. That number can reach from zero to unlimited, while unlimited means that retransmissions are only limited by the error counting mechanisms.

NOTE CiA 612-1 gives system design recommendations on how to configure the number of retransmissions for the case, when error signalling is disabled.

5.15 Network-wide data consistency

Network configuration decides whether nodes signal the errors detected in frames. When error signalling is enabled within a network, a frame can be simultaneously accepted as a valid frame either by all nodes or by no node. Thus, data consistency is a property of the network achieved by the concepts of the broadcast and by the error handling. When error signalling is disabled within a network, local errors can prevent specific nodes from receiving frames that are received by other nodes.

© ISO 2024 – All rights reserved

Documents
Document Sharing Hub
Full document details: BS ISO 11898-1:2024

5.16 Switchable operating modes of the PMA

While the CAN XL communication is possible using CAN transceivers compliant with ISO 11898-2, higher data bit rates require CAN transceivers that can be switched into a dedicated operating mode for the XL data phase. When that operating mode does not allow the dominant bus state to overwrite all other bus states, the error signalling is disabled by the node configuration. CAN XL nodes provide the PWM encoding function as specified in 7.5 and the PWM decoding function as specified in ISO 11898-2 to switch the operating modes of the CAN transceivers.

The PCS indicates the following CAN transceiver modes to the PMA sub-layer if the CAN transceiver mode switching is enabled:

— arbitration mode;

— data TX mode: active in the transmitter during ADH bit and XL data phase;

— data RX mode: active in the receiver during ADH bit and XL data phase.

Table 1 links the CAN transceiver mode names used in this document at the MAC sub-layer to the names used in ISO 11898-2 at the PMA sub-layer.

Table 1 — CAN transceiver modes signalled to the PMA

CAN transceiver modes signalled to the PMA sub-layer	PMA operating modes for CAN SIC XL transceivers as specified in ISO 11898-2
Arbitration mode	SIC mode
Data TX mode	FAST TX mode
Data RX mode	FAST RX mode

NOTE Error signalling enabled combined with CAN transceiver mode switching enabled is not compatible with the PMA sub-layer specified in ISO 11898-2.

5.17 Bus states and MAC sub-layer phases

The MAC sub-layer distinguishes the following three phases, as shown in Figure 2:

— arbitration phase, in which the nominal bit time is used;

— FD data phase, in which the FD data bit time is used;

— XL data phase, in which the XL data bit time is used.

This document uses the terms dominant (0) and recessive (1) for the bit values of the MAC frame, independent of the CAN transceiver mode. FD data bit time and XL data bit time may be identical.

If the CAN transceiver mode switching is enabled, the PMA sub-layer specified in ISO 11898-2 behaves in the following way. The CAN SIC XL transceiver of the transmitter sends the bus state level_1 instead of recessive and the bus state level_0 instead of dominant during the data TX mode. If the CAN transceiver mode switching is enabled, the CAN SIC XL transceiver of the receiver does not drive the bus during the data RX mode.

NOTE The bus states level_1 and level_0 do not overwrite each other. If two nodes are driving concurrently level_1 and level_0, receiving nodes detect unpredictably either level_1 or level_0.

© ISO 2024 – All rights reserved

Documents
Document Sharing Hub
Full document details: BS ISO 11898-1:2024

6 CAN DLL specification

6.1 General

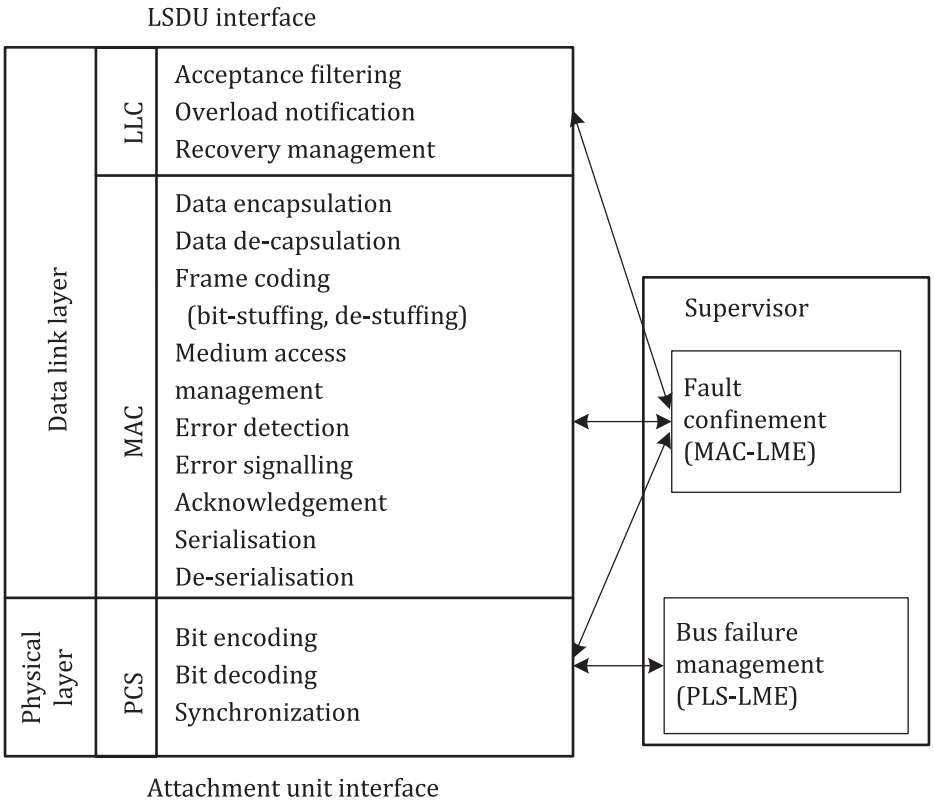

Figure 3 — Layered architecture of CAN

The DLL as shown in Figure 3, is divided into the two sub-layers: the LLC sub-layer (responsible for flow control, recovery management and time-stamping) and the MAC sub-layer (responsible for data encapsulation, data de-capsulation, frame coding, bit-stuffing, de-stuffing, serialization, de-serialization, error detection, error signalling and acknowledgement).

The DLL has a cross-layer function interface to the FCE. The MAC sub-layer operations are supervised by the FCE. Fault confinement is a self-checking mechanism, as specified in Clause 8, that distinguishes short disturbances from permanent failures.

6.2 Time stamping

The DLL may have a cross-layer function interface to a time-base for the time-stamping. When the time-stamping is not supported, time-base and time-stamps shall be treated as constant with the value 0.

6.3 DLL protocol

Two peer protocol entities communicate with each other by exchanging frames or PDUs.

An (N)-layer protocol data unit (PDUN) consists of (N)-layer specific protocol control information (PCIN) and (N)-layer user data. PDUN shall be passed to a (N-1)-layer entity via an SAPN-1. The PDUN shall be passed by means of the SDUN-1 to the (N-1)-layer, the services of which allow the transfer of the PDUN. The SDU shall be the interface data whose identity is preserved between (N)-layer entities, i.e. it represents the logical data unit transferred by a service. The DLL of the CAN protocol shall provide neither means for mapping one SDU into multiple PDUs nor means for mapping multiple SDUs into one PDU, i.e. a PDUN is directly constructed from the associated SDUN and the layer specific control information PCIN. Figure 4 illustrates the data link sub-layer interactions.

© ISO 2024 – All rights reserved

Documents
Document Sharing Hub
Full document details: BS ISO 11898-1:2024

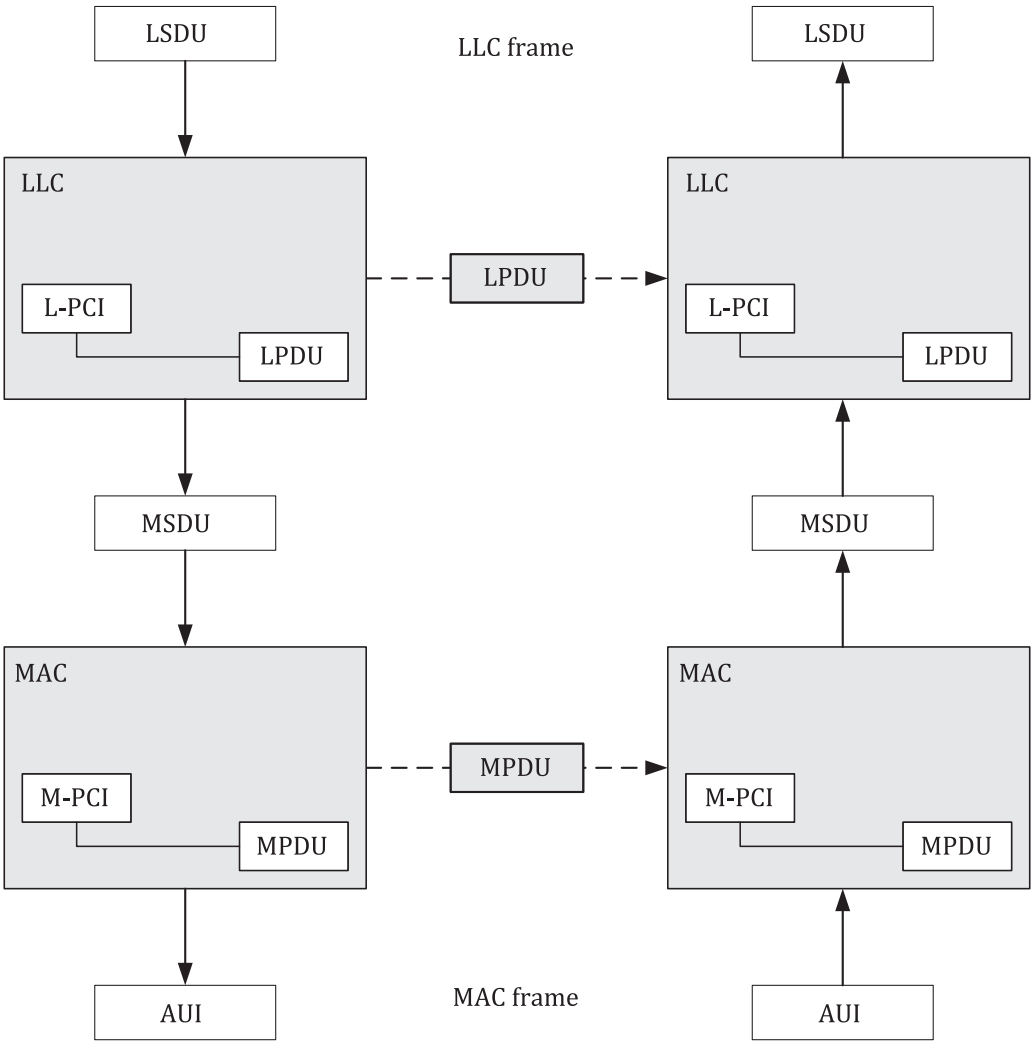

Figure 4 — Protocol layer interactions

The DLL's SDU is called the LLC frame; it also interfaces between the LLC sub-layer and the MAC sub-layer.

The DLL's PDU is called the MAC frame. This is the bit sequence seen on the CAN bus. The MAC frame may be in CBFF, CEFF, FBFF, FEFF, or XLFF.

6.4 LLC sub-layer

6.4.1 Overview

The LLC sub-layer describes the upper part of the DLL according to ISO/IEC 8802-2. It is associated with those protocol issues that are independent of the type of the medium access method.

The LLC sub-layer shall provide the following functions:

— flow control;

— recovery management;

— time-stamping.

The LLC sub-layer shall offer two types of connectionless transmission services to the LLC user, as specified in 6.4.5.2.

The interface service data sent from or to the user shall be as specified in 6.4.3.

© ISO 2024 – All rights reserved

Documents
Document Sharing Hub
Full document details: BS ISO 11898-1:2024

6.4.2 Notifications

The notifications sent between the LLC user and the LLC sub-layer are specified in Table 2 and in Table 3.

Table 2 — Notification sent from LLC user to LLC sub-layer

Notification	Description
Reset_Request	Request to set the node into an initial state

Table 3 — Notification sent from LLC sub-layer to LLC user

Notification	Description
Reset_Response	Response to the Reset_Request
Node_Status	Indicates the current status of the node, i.e. it signals whether or not the node is in the bus-off state.

6.4.3 Structure of LLC frames

LLC frames are SDUs between higher OSI layers and LLC entities. Table 4 specifies the LLC frame.

The LLC frame structure shall contain all content needed for all CAN frame formats and types, including the selection of a specific CAN frame format. In the interaction between the LLC sub-layer and the MAC sub-layer, the content of that parts of the LLC frame that are not used for the selected CAN frame format shall be ignored. Only LLC frames with the LLC format specified in Table 4 can be transferred to the LLC sub-layer.

Table 4 — LLC frame

Field	Size	Description
ID	(11 +18) bit	Priority identifier: ID(28) to ID(18) are used for all frames with 11-bit identifier format (CBFF, FBFF, XLFF) while ID(28) to ID(0) are used for all frames with 29-bit identifier format (CEFF, FEFF).
Format	3 bit	The frame format is coded by the three bits IDE, FDF, and XLF: — if 000_b the MAC frame format is CBFF; — if 100_b the MAC frame format is CEFF; — if 010_b the MAC frame format is FBFF; — if 110_b the MAC frame format is FEFF; — if 011_b the MAC frame format is XLFF. Other bit values do not code a valid frame format.
FTYP	1 bit	In CBFF and CEFF, the FTYP bit corresponds to the MAC frame's RTR bit, this means that FTYP distinguishes between the frame types RF (FTYP = 1_b) and DF (FTYP = 0_b). In FBFF and FEFF, the FTYP bit is ignored for transmission but corresponds to the MAC frame's RRS bit for reception. In XLFF, the FTYP bit corresponds to the MAC frame's RRS bit.
BRS	1 bit	Bit rate switch: only used in FBFF and FEFF frames.
ESI	1 bit	Error state indicator: only used in FBFF and FEFF frames.
SDT	1 byte	SDU type: describes the structure of the frame's data field content, only used in XLFF frames.
SEC	1 bit	Simple/extended content: flags if the data field contains simple or extended content. This is only used in XLFF frames.
DLC	(7+4) bit	Data length code: 7 MSB only used in XLFF frames. For XLFF frames the numbers 0 to 2047 code 1 to 2048 data bytes. For DFs of all other formats the 4 LSB encode the number or data bytes as specified in Table 5.

© ISO 2024 – All rights reserved

Documents
Document Sharing Hub
Full document details: BS ISO 11898-1:2024

Table 4 *(continued)*

Field	Size	Description
VCID	1 byte	Virtual CAN channel ID: only used in XLFF frames.
AF	4 byte	Acceptance field: only used in XLFF frames.
LLC data	0 to 2048 byte	Payload of the LLC frame

Table 5 — DLC: coding of the four LSB

DLC value [decimal]	CBFF and CEFF [byte]	FBFF and FEFF [byte]
0	0	0
1	1	1
2	2	2
3	3	3
4	4	4
5	5	5
6	6	6
7	7	7
8	8	8
9	8	12
10	8	16
11	8	20
12	8	24
13	8	32
14	8	48
15	8	64

6.4.4 Limited LLC frames

A subset of the complete range of identifiers and DLCs may be implemented.

If an LLC sub-layer is restricted to the use of a sub-range of identifiers (e.g. only 11-bit identifiers), then it shall be limited to LLC DFs and LLC RFs with identifiers of that sub-range (e.g. identifiers with their IDE bit set to logic 0 and their identifier extension is ignored).

If an LLC sub-layer is restricted to the use of less than the maximum number of data bytes, then it shall be limited to LLC DFs with several data bytes of that restricted range. If the DLC indicates a higher number of data bytes, the data bytes beyond the restricted range shall be replaced in the LLC DF by bytes with the value of CC_{HEX} ("padding") both for received and for transmitted frames. The CAN node may support a configuration where the CAN node does not transmit a frame whenever the frame's DLC indicates several data bytes beyond the restricted range.

NOTE The padding of the data field of received DFs does not need to be implemented in the LLC layer.

6.4.5 Services of LLC sub-layer

6.4.5.1 Service access points

In CAN nodes, the LLC's service access point is the LLC storage unit, e.g. a memory buffer for the transmission or for the reception of a DF or RF.

© ISO 2024 – All rights reserved

Documents
Document Sharing Hub
Full document details: BS ISO 11898-1:2024

6.4.5.2 Types of connectionless-mode transmission services

The LLC sub-layer shall offer two types of connectionless-mode transmission services.

— Unacknowledged data transfer service
This service provides means by which LLC users exchange LSDU without establishing a data link connection.

— Unacknowledged remote data request service
This service provides means used by an LLC user to request a remote node for an LSDU transmission without establishing a data link connection.

The remote node shall serve the data request in the following two ways.

— The requested data may be prepared by the remote user for transmission. In this case, the data is located in a remote node buffer and is transmitted by the remote user LLC entity upon reception of the remote request frame.

— The requested data is transmitted by the remote user upon reception of the remote request frame.

According to the two different LLC services, seven types of frames may be used for the communication between transmitting node and receiving nodes:

— LLC DF in CBFF;

— LLC DF in CEFF;

— LLC DF in FBFF;

— LLC DF in FEFF;

— LLC RF in CBFF;

— LLC RF in CEFF;

— LLC DF in XL frame format.

The LLC DF carries data from a transmitter to a receiver. The LLC RF requests transmission of a DF (with the same identifier) from a (single) remote node. In both cases, the LLC sub-layer shall notify the successful transmission or reception of a DF or RF to the LLC user.

6.4.5.3 Format description of service primitives

Service primitives are written as:

```
service.type(
    [parameter1, ]
)
```

where	service	indicates the name of the service, e.g. L_Data for data transfer;
	type	indicates the type of the service primitives (see 6.4.5.4);
	[parameter1,]	is the list of values passed to the service primitives.

The squared brackets indicate that this parameter list can be empty.

6.4.5.4 Types of services

There are four generic types of services, shown as follows:

a) Service.Request The request service is passed from the (N)-user (service user) to the (N)-layer (service provider) to request initiation of the service.

© ISO 2024 – All rights reserved

Documents
Document Sharing Hub
Full document details: BS ISO 11898-1:2024

b) Service.AbortRequest The request service is passed from the (N)-user (service user) to the (N)-layer (service provider) to cancel a previously requested service initiation.

c) Service.Confirm The confirm service is passed from the (N)-layer (or sub-layer) to the (N)-user to convey the results of one or more associated previous service request(s). This service can indicate either failure to comply or some level of compliance. It does not necessarily indicate any activity at the remote peer interface.

d) Service.Indication The indication service is passed from the (N)-layer to the (N)-user to indicate an internal (N)-layer (or sub-layer) event, which is significant to the (N)-user. This event can be logically related to a remote service request or can be caused by an event internal to the (N)-layer (or sub-layer).

6.4.5.5 Service specification

6.4.5.5.1 General

6.4.5.5 specifies in detail the LLC services and their associated parameters. Table 6 defines the LLC services. Table 7 defines the LLC service parameters.

Table 6 — LLC services overview

Service	Services	Description
Unacknowledged data transfer	L_Data.Request	Request for data transfer
	L_Data.AbortRequest	Request abortion of data transfer
	L_Data.Confirm	Confirmation of data transfer request
	L_Data.Indication	Indication of data transfer reception

Table 7 — LLC service parameters

Parameter	Description
Frame	LLC frame
Transfer_Status	Confirmation: ongoing, lost arbitration, transmitted, aborted, disturbed
Timestamp	Time value captured on trigger from MAC sub-layer
Handle	Identifies LLC storage unit used for transaction

6.4.5.5.2 L_Data.Request

Function

The L_Data.Request service shall be passed from the LLC user to the LLC sub-layer to request that an LLC frame is sent to one or more remote LLC entities.

Semantics of L_Data.Request service

The service shall provide parameters as follows:

```
L_Data.Request(
    Frame
    Handle
)
```

The LLC storage unit to be used for the transmission is identified by the handle.

Effect on receipt

Receipt of this service shall cause the LLC sub-layer to initiate the transfer of an LLC frame by use of the data transfer service provided by the MAC sub-layer (see 6.6). Any L_Data.Request shall be processed not later than the second SOF after the request when there are no EFs present during this time.

© ISO 2024 – All rights reserved

Documents
Document Sharing Hub
Full document details: BS ISO 11898-1:2024

6.4.5.5.3 L_Data.AbortRequest

Function

The L_Data.AbortRequest service shall be passed from the LLC user to the LLC sub-layer to abort a previous request of an LLC frame transmission.

Semantics of L_Data.AbortRequest service

The service request shall provide the following parameters:

```
L_Data.AbortRequest(
    Handle
)
```

The LLC storage unit for which the transmission shall be aborted is identified by the handle.

Effect on receipt

Receipt of this service shall cause the LLC sub-layer to abort the transfer of an LLC frame in the specified LLC storage unit. Pending transmissions, which are already passed to the MAC sub-layer, shall only be aborted if:

— an error in the MAC sub-layer during transmission occurs, or

— arbitration was lost in the MAC sub-layer,

which causes the LLC frame to wait for another transmission attempt.

This means that an abortion request shall be kept pending in the LLC layer until either one of the above situations occur, or until the transmission was completed.

The LLC sub-layer cannot abort transmissions that are already submitted to the MAC sub-layer (due to priority scheduling of the requested LLC storage unit indicated by the handle). Any L_Data.AbortRequest shall be processed prior to the second SOF after the request when there are no EFs present during this time. Any L_Data.AbortRequest shall be processed prior to the third SOF after the request when there are EFs present during this time.

6.4.5.5.4 L_Data.Confirm

Function

The L_Data.Confirm service shall be passed from the local LLC sub-layer to the LLC user to convey the results of the previous L_Data.Request service. This service shall be a local confirmation, i.e. it shall not imply that the remote LLC entity or entities are passing the associated indication service to the corresponding LLC user(s).

Semantics of L_Data.Confirm service

The service shall provide parameters as follows:

```
L_Data.Confirm(
    Transfer_Status
    Timestamp
    Handle
)
```

The Transfer_Status shall be used to indicate the status of the transaction initiated by the previous L_Data. Request service.

Transfer_Status: [Ongoing, Lost Arbitration, Transmitted, Aborted, Disturbed]

© ISO 2024 – All rights reserved

Documents
Document Sharing Hub
Full document details: BS ISO 11898-1:2024