BS ISO 11952:2019

BSI Standards Publication

Surface chemical analysis — Scanning-probe microscopy — Determination of geometric quantities using SPM: Calibration of measuring systems

Documents
Document Sharing Hub

Full document details: BS ISO 11952:2019

National foreword

This British Standard is the UK implementation of ISO 11952:2019.

The UK participation in its preparation was entrusted to Technical Committee CII/60, Surface chemical analysis.

A list of organizations represented on this committee can be obtained on request to its secretary.

This publication does not purport to include all the necessary provisions of a contract. Users are responsible for its correct application.

© The British Standards Institution 2019
Published by BSI Standards Limited 2019

ISBN 978 0 580 88296 8

ICS 71.040.40

Compliance with a British Standard cannot confer immunity from legal obligations.

This British Standard was published under the authority of the Standards Policy and Strategy Committee on 31 May 2019.

Amendments/corrigenda issued since publication

Date	Text affected

Documents
Document Sharing Hub

Full document details: BS ISO 11952:2019

INTERNATIONAL STANDARD

ISO 11952

Second edition
2019-05

Surface chemical analysis — Scanning-probe microscopy — Determination of geometric quantities using SPM: Calibration of measuring systems

Analyse chimique des surfaces — Microscopie à sonde à balayage — Détermination des quantités géométriques en utilisant des microscopes à sonde à balayage: Étalonnage des systèmes de mesure

Reference number
ISO 11952:2019(E)

Documents
Document Sharing Hub

© ISO 2019

Full document details: BS ISO 11952:2019

COPYRIGHT PROTECTED DOCUMENT

© ISO 2019

All rights reserved. Unless otherwise specified, or required in the context of its implementation, no part of this publication may be reproduced or utilized otherwise in any form or by any means, electronic or mechanical, including photocopying, or posting on the internet or an intranet, without prior written permission. Permission can be requested from either ISO at the address below or ISO's member body in the country of the requester.

ISO copyright office
CP 401 • Ch. de Blandonnet 8
CH-1214 Vernier, Geneva
Phone: +41 22 749 01 11
Fax: +41 22 749 09 47
Email: copyright@iso.org
Website: www.iso.org

Published in Switzerland

© ISO 2019 – All rights reserved

Documents
Document Sharing Hub

Full document details: BS ISO 11952:2019

Contents

Page

Foreword ... **v**

Introduction ... **ix**

1 Scope ... **1**

2 Normative references ... **1**

3 Terms and definitions ... **1**

4 Symbols ... **2**

5 Characteristics of SPMs ... **4**
5.1 Components of an SPM ... 4
5.2 Metrological categories of SPMs ... 6
5.3 Block diagram of an SPM ... 6
5.3.1 For category C: ... 6
5.3.2 Additionally, for category B: ... 6
5.3.3 Additionally, for category A: ... 7
5.4 Calibration interval ... 7

6 Preliminary characterization of the measuring system ... **8**
6.1 Overview of the instrument characteristics and influencing factors to be investigated ... 8
6.2 Waiting times after interventions in the measuring system (e.g. instrument installation, intrinsic effects, carrying out operation, warm-up, tip/specimen change) ... 10
6.2.1 Adjustment of the instrument to ambient conditions ... 10
6.2.2 Potential causes of drift ... 10
6.2.3 Procedure ... 10
6.3 External influences ... 11
6.3.1 Sources of external influences ... 11
6.3.2 Consequences of external influences and countermeasures ... 11
6.4 Summary ... 11

7 Calibration of scan axes ... **12**
7.1 General ... 12
7.2 Measurement standards ... 12
7.2.1 Requirements for measurement standards ... 12
7.2.2 Handling of measurement standards ... 13
7.3 *Xy*-scanner guidance deviations of the *x*- and *y*-axes (*xtz*, *ytz*) ... 13
7.3.1 Definition of *xy*-scanner guidance deviations in vertical direction (*z*-plane) ... 13
7.3.2 Measurement strategy ... 13
7.3.3 Flatness measurement standards ... 14
7.3.4 Measurements ... 15
7.3.5 Evaluation of results ... 15
7.3.6 Summary ... 16
7.3.7 Extended calibration measurements ... 16
7.4 Calibration of *x*- and *y*-axis (*Cx*, *Cy*) and of rectangularity (ϕxy) and determination of deviations (*xtx*, *yty*, *ywx*) ... 17
7.4.1 General ... 17
7.4.2 Definition of pitch p_x and p_y and rectangularity (ϕ_{xy}) in the *x*-*y*-plane ... 17
7.4.3 Measurement strategy ... 17
7.4.4 Selection of lateral measurement standards ... 18
7.4.5 Basic calibration — Adjustments and measurements ... 19
7.4.6 Extended calibrations (scan speed, angle, and eccentric measurements) ... 20
7.4.7 Evaluation ... 21
7.4.8 Extended evaluations: nonlinearity of the *x*-*y*-axis ... 24
7.4.9 Summary ... 25
7.5 Calibration of the *z*-axis C_z, ϕ_{xz}, and ϕ_{yz}, and determination of the deviations *ztz*, *zwx*, and *zwy* ... 26
7.5.1 General ... 26

© ISO 2019 – All rights reserved

AVA Documents
Document Sharing Hub

Full document details: BS ISO 11952:2019

7.5.2 Definitions of the step height ... 26
7.5.3 Measurement strategy ... 27
7.5.4 Selection of step height measurement standards ... 27
7.5.5 Basic calibration — Adjustments and measurements ... 28
7.5.6 Extended calibrations ... 29
7.5.7 Evaluations ... 30
7.5.8 Summary ... 34
7.6 3D measurement standards for alternative and extended calibration ... 34
7.6.1 General ... 34
7.6.2 Requirements for 3D measurement standards ... 34
7.6.3 Selection of the 3D measurement standards ... 35
7.6.4 Carrying-out of the basic calibration ... 36
7.6.5 Evaluation of the measurements ... 36
7.6.6 Extended calibrations ... 37
7.6.7 Advantages and disadvantages of the 3D measurement standard ... 37

8 Report of calibration results ... 38
8.1 General ... 38
8.2 Equipment used ... 38
8.3 Statements on ambient conditions ... 38
8.4 From Clause 5: Preliminary investigations ... 39
8.5 From Clause 5: Calibration — Details of measurement standards, scan range and scan speed ... 39
8.6 Further statements ... 39

9 Uncertainties of measurement ... 39
9.1 General ... 39
9.2 Vertical measurand (height and depth) ... 40

10 Report of results (form) ... 41

Annex A (informative) **Example of superposition of disturbing influences in the topography image ... 42**

Annex B (informative) **Sound investigations: effects of a sound-proofing hood ... 44**

Annex C (informative) **Thermal isolation effect of a sound-proofing hood/measuring cabin ... 46**

Annex D (informative) **Handling of contaminations in recorded topography images ... 48**

Annex E (informative) **Step height determination: comparison between histogram and ISO 5436-1 method ... 49**

Annex F (normative) **Uncertainty of measurement for lateral measurands (pitch, position, diameter) ... 51**

Bibliography ... 56

© ISO 2019 – All rights reserved
Documents
Document Sharing Hub
Full document details: BS ISO 11952:2019

Foreword

ISO (the International Organization for Standardization) is a worldwide federation of national standards bodies (ISO member bodies). The work of preparing International Standards is normally carried out through ISO technical committees. Each member body interested in a subject for which a technical committee has been established has the right to be represented on that committee. International organizations, governmental and non-governmental, in liaison with ISO, also take part in the work. ISO collaborates closely with the International Electrotechnical Commission (IEC) on all matters of electrotechnical standardization.

The procedures used to develop this document and those intended for its further maintenance are described in the ISO/IEC Directives, Part 1. In particular, the different approval criteria needed for the different types of ISO documents should be noted. This document was drafted in accordance with the editorial rules of the ISO/IEC Directives, Part 2 (see www.iso.org/directives).

Attention is drawn to the possibility that some of the elements of this document may be the subject of patent rights. ISO shall not be held responsible for identifying any or all such patent rights. Details of any patent rights identified during the development of the document will be in the Introduction and/or on the ISO list of patent declarations received (see www.iso.org/patents).

Any trade name used in this document is information given for the convenience of users and does not constitute an endorsement.

For an explanation of the voluntary nature of standards, the meaning of ISO specific terms and expressions related to conformity assessment, as well as information about ISO's adherence to the World Trade Organization (WTO) principles in the Technical Barriers to Trade (TBT) see www.iso.org/iso/foreword.html.

This document was prepared by Technical Committee ISO/TC 201, *Surface chemical analysis*, Subcommittee SC 9, *Scanning probe microscopy*.

This second edition cancels and replaces the first edition (ISO 11952:2014), of which it constitutes a minor revision. The changes to the previous edition are as follows:

		Previous edition	Revised edition
Figure 1		"interferometery"	"interferometry"
Figure 1	Note	"The calibration of a user's SPM by means of traceably calibrated measurement standards is the object of this International Standard (done by the user)."	"The calibration of a user's SPM by means of traceable calibrated measurement standards is the object of this document (done by the user)."
Clause 4	N_i	"N_i"	"N_{ij}"
Clause 4	r	"tip"	"tip radius"
Clause 4	α_m	"thermal expansion coefficient"	"thermal expansion coefficient of the specimen"
Clause 4	ytx	"positional deviation Δx measured along a y-coordinate line"	"straightness deviation Δx measured along a y-coordinate line"
Clause 4	yty	"straightness deviation Δy measured along a y-coordinate line"	"positional deviation Δy measured along a y-coordinate line"
Clause 4	ztz	"straightness deviation Δz measured along a z-coordinate line"	"positional deviation Δz measured along a z-coordinate line"
6.3.1	Title	"Kinds of external influence"	"Sources of external influences"
6.3.1	First sentence	"As SPMs are most sensitive to interference from the environment, the following quantities are to be accounted for":	"As SPMs are very sensitive to interference from the environment, the influences of the following quantities need to be determined":

© ISO 2019 – All rights reserved

Documents
Document Sharing Hub
Full document details: BS ISO 11952:2019

		Previous edition	Revised edition
6.3.1	Fourth bullet	“mechanical vibrations (e.g. structural vibrations, foot fall sounds/human traffic, pumps)”;	“mechanical vibrations (e.g. structural vibrations, human traffic, pumps)”;
6.4	a) and b)	a) For measurement b) For installation or familiarization of the staff	a) and b) switched
7.3.4	Second bullet	“Adjust the z-position of the scanner in such a way that the z-scanner operates symmetrically around the central position in the z-deflection range (see also Figure 18).”	“Adjust the z-position of the scanner in such a way that the z-scanner operates symmetrically around the central position in the z-deflection range as illustrated in Figure 17 around its medium (central) deflection, i.e. 50 % of its range”
7.3.7	Fourth bullet	“adjust the z-position of the scanner in such a way that the z-scanner operates, e.g. by 20% (see also Figure 20) above or below the central position in the z-deflection range (see also Figure 18 and 20).”	“adjust the z-position of the scanner in such a way that the z-scanner operates above or below the central position in the z-deflection range, i.e. symmetrically around 10 %, 30 %, 70 % and 90 % (as illustrated in Figure 17), in addition to the basic z calibration performed around 50 % deflection”
Figure 9	Title	“Flow diagram of calibration of the lateral axes[35]“	“Calibration of the lateral axes: materials, steps and methods[35]”
7.4.4	Seventh paragraph	“needs to” “great”	“should” “large”
7.4.4	Eighth paragraph	“(relatively feeble)”	“(low)”
7.4.5	2)	“(see also Figure 18)”	“as illustrated in Figure 15 and shown for the medium (central) deflection case in Figure 17.”
7.4.7	Figure 10	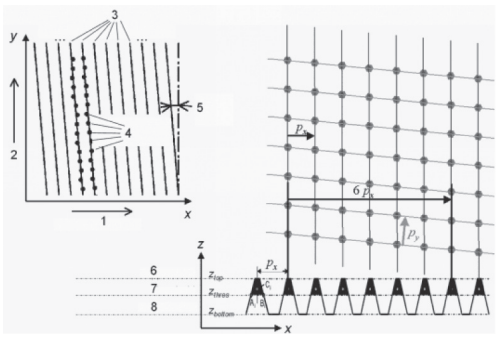	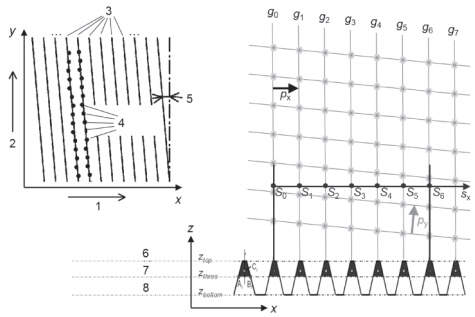
7.4.7	4) and Note 1	“Appurtenant”	“relevant”
7.4.8	Second bullet	“In good gratings, the mean values of the pitches of all the straight lines are a good approximation and should be used for further evaluation. If this is not the case, the parallelism of the straight lines is to be forced by fitting as above.”	“In good gratings, the fit lines g_0 to g_n are nearly parallel so that the mean value of the gradients of all these straight lines is a good approximation and should be used for further evaluation. If this is not the case, the parallelism of the straight lines is to be forced by fitting as above.”
7.4.8	Eighth bullet	“(example in Figure 15)”	“(the example in Figure 12 shows a polynomial fit of the third degree)”

© ISO 2019 – All rights reserved
Documents
Document Sharing Hub
Full document details: BS ISO 11952:2019

		Previous edition	Revised edition
7.4.8	Note 2	"In the case of clear deviations of the specimen temperature (e.g. in deep-temperature applications) from the reference temperature 20 °C in particular, for which the calibration of the measurement standard is valid, the thermal expansion is to be accounted for."	"The certified pitch values of a transfer standard are valid for a certain reference temperature, typically 20 °C. In case of significant deviations of the sample temperature from the reference temperature (e.g. in low-temperature chambers or if the sample is heated in the particular setup), the material-dependent thermal expansion is to be taken into account."
7.5.7.2.1	Second paragraph	"For the one straight line — besides the parallelism requirement — the determination uses only an area C in the middle of the indention or elevation whose width can be selected by the user; it is usual to select one (according to ISO 5436 1) to two-thirds (Figure 18) of the total width w of the indention/elevation."	"For the one straight line — besides the parallelism requirement — the determination uses only the section C in the middle of the indention or elevation whose width w_m can be selected by the user; it is usual to select one (according to ISO 5436-1) to two-thirds (like in the example shown on the left of Figure 18) of the total width w (defined as full-width at half maximum) of the indention/elevation."
7.5.7.2.1	Third paragraph	"Taking account of the parallelism requirement, the second straight is selected through two areas A and B which lie symmetrically about the indention/elevation and usually show the same width as C. The distance of A"	"Taking account of the parallelism requirement, the second straight is selected through two sections A and B which lie symmetrically about the indention/elevation. The lengths w_s in sections A and B are identical, but might be different from w_m. The sections A and B should not start/end with the beginning/end of the profile (scanline), as irregularities in height measurement are to be expected especially at the beginning/end of scanlines. A spacing w_l to the left of section A and w_r to the right of section B should be allowed for. As a general rule, the total length of the measured profile should be at least 3*w*. The distance we of A"
7.5.7.2.1	Fourth paragraph	"As to the mathematics, the determination of the step height, *h*, is reduced to the calculation of only one regression line by appropriately shifting the points area by area by +*h*/2 and –*h*/2, respectively."	"As to the mathematics, the determination of the step height, *h*, is reduced to the calculation of only one regression line by least squares approximation with h being the fit variable. This reduction to only one regression line is achieved by introducing a vertical shift of the data points in the sections A, B and C according to the following rules":
7.5.7	Figure 18 title	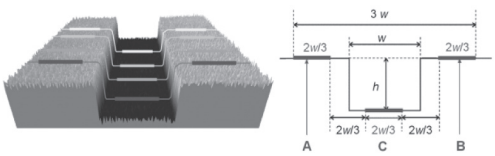	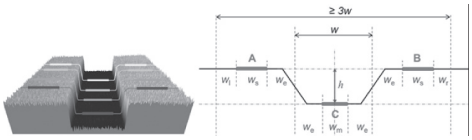

© ISO 2019 – All rights reserved

Documents
Document Sharing Hub
Full document details: BS ISO 11952:2019

		Previous edition	Revised edition
		"Step height determination according to ISO 5436-1 (left: step height measurement standard 6 nm)"	"Step height determination according to ISO 5436-1 (left: example of a step height measurement standard 6 nm, right: profile section C of length w_m and profile sections A and B each of length w_s taken into account for step height analysis, spacings of lengths w_e from the edge and of lengths w_l to the left of section A and w_r to the right of section B)"
Table C.1	Sum	"+1,49"	"+1,50"
Annex E	Fifth paragraph	"The bars in Figure E.1 give the uncertainty"	"The bars in Figure E.1 give the standard uncertainty"
Bibliography	[16]	DZIOMBA T., KOENDERS L., WILKENING G., FLEMMING M., DUPARRÉ A. Entwicklung einer Kalibrierrichtlinie für Rastersondenmikroskope; tm — Technisches Messen 72 (2005) 5, S. 295–307; siehe auch http://www.tm-messen.de/	KLAPETEK P., Quantitative data processing in scanning probe microscopy. Elsevier, Amsterdam, The Netherlands, ISBN: 978–0–12–813347–7, 2018
Bibliography	[26]	Koenders, L.; Dziomba, T.; Thomsen-Schmidt, P.; Senoner M.: Normale für die dimensionelle und analytische Nanometrologie. PTB-Mitteilungen 114 (2004) 1, S. 16–24	Yacoot A., Koenders L. Recent developments in dimensional metrology using AFMs. *Meas. Sci. Technol*. 2011, 22, p. 12201
Bibliography	[39]	ZHAO X. PTB-report F-20. Wirtschaftsverlag NW, Bremerhaven, Germany, 1995	Zhao X. "Scanning Probe Microscope with high resolution capacitive transducers", PTB-report F-32, Wirtschaftsverlag NW — Verlag für neue Wissenschaft GmbH, Bremerhaven, www-nw-verlag.de ISBN 3-89701-207–3, 1998, 158 pages

Any feedback or questions on this document should be directed to the user's national standards body. A complete listing of these bodies can be found at www.iso.org/members.html.

© ISO 2019 – All rights reserved
Documents
Document Sharing Hub
Full document details: BS ISO 11952:2019

Introduction

The progress of miniaturization in semiconductor structuring, together with the rapid advance of many diverse applications of nanotechnology in industrial processes, calls for reliable and comparable quantitative dimensional measurements in the micro- and submicrometre range[9]. Currently, a measurement resolution, in or below the nanometre region, is frequently required. Conventional optical or stylus measurement methods or coordinate measuring systems are not able to offer this level of resolution.

For this reason, scanning-probe microscopes (SPMs) are increasingly employed as quantitative measuring instruments. Their use is no longer confined only to research and development, but has been extended to include industrial production and inspection.

For this category of measuring instrument, standardized calibration procedures need to be developed, as have already been established, for example, for contact stylus instruments (see ISO 12179). For efficient and reliable calibration of SPMs to be carried out, the properties of the measurement standards used need to be documented and accounted for in the calibration (see Figure 1). At the same time, the procedure for the calibration should be clearly defined.

Only if this prerequisite is satisfied will it be possible to perform traceable measurements of geometrical quantities.

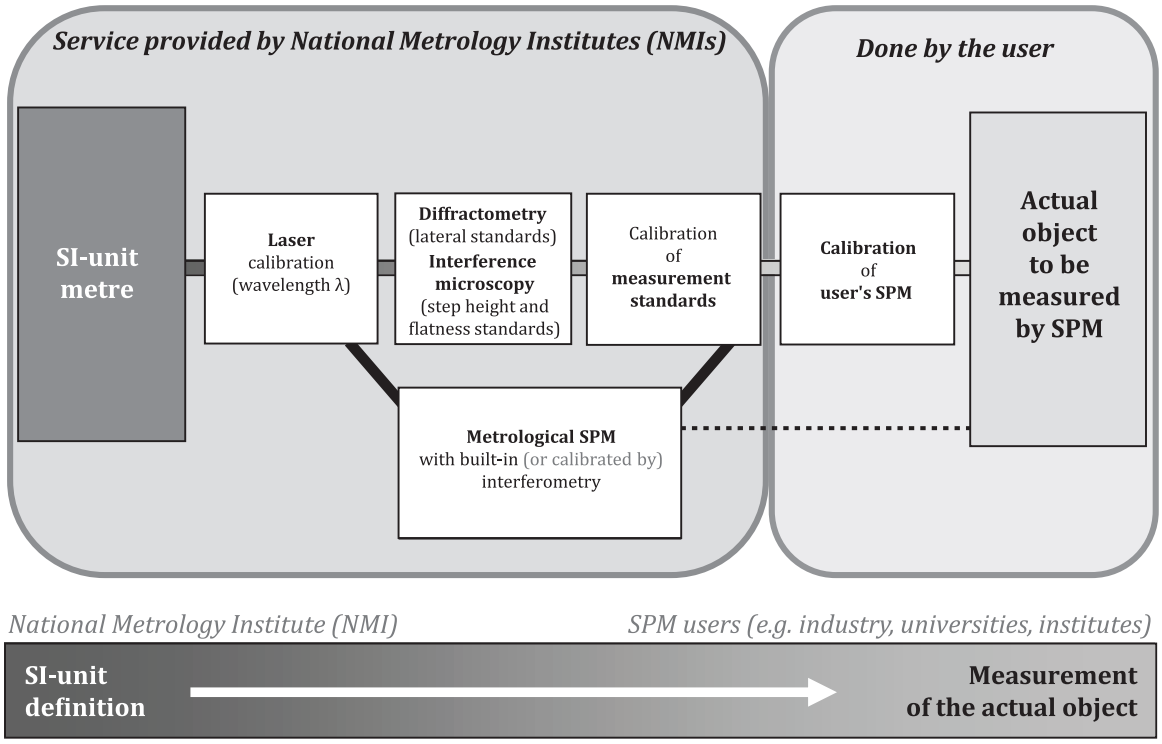

NOTE The calibration of a user's SPM by means of traceable calibrated measurement standards is the object of this document (done by the user).

Figure 1 — Traceability chain for SPMs

An SPM is a serially operating measuring device which uses a probe with a tip of adequate fineness to trace the surface of the object to be measured by exploitation of a local physical interaction (such as the quantum-mechanical tunnel effect, interatomic or intermolecular forces, or evanescent modes of the electromagnetic field). The probe and the object to be measured are being displaced in relation to one another in a plane (hereinafter referred to as the *x*-*y*-plane) according to a defined pattern[10], while the signal of the interaction is recorded and can be used to control the distance between probe and

© ISO 2019 – All rights reserved

Documents
Document Sharing Hub
Full document details: BS ISO 11952:2019

object. In this document, signals are considered which are used for the determination of the topography (hereinafter called the "*z*-signal").

This document covers the verification of the device characteristics necessary for the measurement of geometrical measurands and the calibration of the axes of motion (*x*, *y*, *z*)[11], i.e. the traceability to the unit of length via measurement on traceable lateral, step height and 3D measurement standards (see Figure 2).

While this document aims at axis calibrations at the highest level and is thereby intended primarily for high-stability SPMs, a lower level of calibration might be required for general industry use.

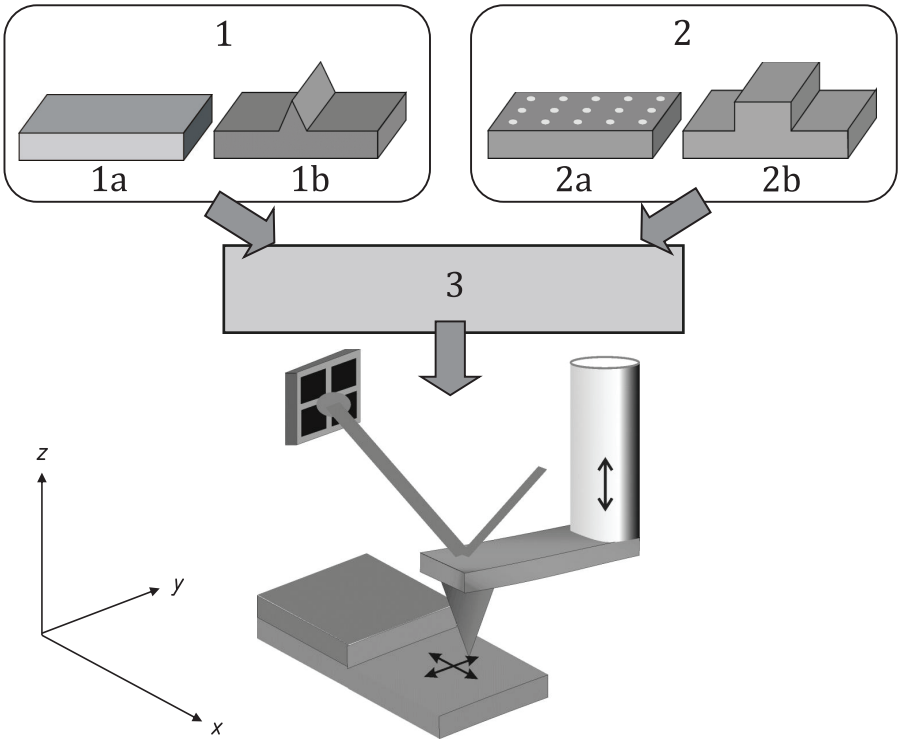

Key

1 measurement standards for verification purposes

1a flatness

1b probe shape

2 measurement standards for calibration purposes

2a 1D and 2D lateral

2b step height

3 calibration of the measurement standards by reference instruments (certified calibration, measurement value including uncertainty)

Figure 2 — Verification and calibration of SPMs with test specimens and measurement standards

This document is mainly based on the guideline VDI/VDE 2656, Part 1, drafted by a guideline committee of the VDI (Verein Deutscher Ingenieure/Association of German Engineers) from 2004 to 2008, with the final whiteprint of that guideline being released in June 2008.

© ISO 2019 – All rights reserved
Documents
Document Sharing Hub
Full document details: BS ISO 11952:2019

Surface chemical analysis — Scanning-probe microscopy — Determination of geometric quantities using SPM: Calibration of measuring systems

1 Scope

This document specifies methods for characterizing and calibrating the scan axes of scanning-probe microscopes (SPMs) for measuring geometric quantities at the highest level. It is applicable to those providing further calibrations and is not intended for general industry use, where a lower level of calibration might be required.

This document has the following objectives:

— to increase the comparability of measurements of geometrical quantities made using SPMs by traceability to the unit of length;

— to define the minimum requirements for the calibration process and the conditions of acceptance;

— to ascertain the instrument's ability to be calibrated (assignment of a “calibrate-ability” category to the instrument);

— to define the scope of the calibration (conditions of measurement and environments, ranges of measurement, temporal stability, transferability);

— to provide a model, in accordance with ISO/IEC Guide 98-3, to calculate the uncertainty for simple geometrical quantities in measurements using an SPM;

— to define the requirements for reporting results.

2 Normative references

The following documents are referred to in the text in such a way that some or all of their content constitutes requirements of this document. For dated references, only the edition cited applies. For undated references, the latest edition of the referenced document (including any amendments) applies.

ISO 11039, *Surface chemical analysis — Scanning-probe microscopy — Measurement of drift rate*

ISO 18115-2, *Surface chemical analysis — Vocabulary — Part 2: Terms used in scanning-probe microscopy*

ISO/IEC Guide 98-3, *Uncertainty of measurement — Part 3: Guide to the expression of uncertainty in measurement (GUM:1995)*

IEC/TS 62622, *Artificial gratings used in nanotechnology — Description and measurement of dimensional quality parameters*

3 Terms and definitions

For the purposes of this document, the terms and definitions given in ISO 18115-2 and IEC/TS 62622 and the following apply.

ISO and IEC maintain terminological databases for use in standardization at the following addresses:

— ISO Online browsing platform: available at https://www.iso.org/obp

— IEC Electropedia: available at http://www.electropedia.org/

© ISO 2019 – All rights reserved

Documents
Document Sharing Hub
Full document details: BS ISO 11952:2019

3.1
scanner bow
additional deflection in the *z*-direction when the scanner is displaced in the *x*-*y*-direction

Note 1 to entry: Scanner bow is also known as out-of-plane motion (see also *xtz*, *ytz* in Clause 4).

3.2
look-up table
table in which a set of correction factors for the scanner are filed for different modes of operation (e.g. scan ranges, scan speeds, deflections)

3.3
step height
height of an elevation (bar) or depth of a groove (see ISO 5436-1); on atomic surfaces, the distance between neighbouring crystalline planes

3.4
levelling
correction of the inclination between the ideal *x*-*y*-specimen plane and the *x*-*y*-scanning plane

4 Symbols

x, y, z	position value related to the respective axis
C_x, C_y, C_z	calibration factors for the *x*-, *y*-, and *z*-axes
h	step height
w	width of a structure of the specimen
N_{ij}	*i*th pitch value in a profile used for the determination of the pitch/period (number of pitch values *i* over all lines $j = 1,..., Nj$)
p_x	pitch or period in the *x*-direction
p_y	pitch or period in the *y*-direction
a_x	vector in the *x*-direction of a grating (not to be confused with p_x)
a_y	vector in the *y*-direction of a grating (not to be confused with p_y)
γ_{xy}	non-orthogonality of 2D gratings
P-V	peak-to-valley value
r	tip radius
Rq (Sq)	root mean square deviation of the assessed roughness profile (*Rq*) or of the assessed area (*Sq*)
T	temperature
α_m	thermal expansion coefficient of the specimen
T_L	temperature of the air
T_m	temperature of the specimen during measurement
j_x	angle of rotation about the *x*-axis

© ISO 2019 – All rights reserved
Documents
Document Sharing Hub
Full document details: BS ISO 11952:2019

j_y	angle of rotation about the y-axis
j_z	angle of rotation about the z-axis
θ	levelling angle
x_L	value of the measurement standard for shift in the x-direction
x_m	shift in the x-direction measured with the x-displacement transducer
xtx	positional deviation Δx measured along an x-coordinate line
xty	straightness deviation Δy measured along an x-coordinate line
xtz	straightness deviation Δz measured along an x-coordinate line
xrx	rotational deviation j_x measured along an x-coordinate line
xry	rotational deviation j_y measured along an x-coordinate line
xrz	rotational deviation j_z measured along an x-coordinate line
xwy	measured rectangularity deviation in the coordinate plane x-y
xwz	measured rectangularity deviation in the coordinate plane x-z
y_L	value of the measurement standard for displacement in the y-direction
y_m	displacement measured with the y-displacement transducer in the y-direction
ytx	straightness deviation Δx measured along a y-coordinate line
yty	positional deviation Δy measured along a y-coordinate line
ytz	straightness deviation Δz measured along a y-coordinate line
yrx	rotational deviation j_x measured along a y-coordinate line
yry	rotational deviation j_y measured along a y-coordinate line
yrz	rotational deviation j_z measured along a y-coordinate line
ywz	rectangularity deviation measured in the coordinate plane y-z
z_L	value of the measurement standard for displacement in the z-direction
z_m	displacement in the z-direction measured with z-displacement transducer
ztx	straightness deviation Δx measured along a z-coordinate line
zty	straightness deviation Δy measured along a z-coordinate line
ztz	positional deviation Δz measured along a z-coordinate line
zrx	rotational deviation j_x measured along a z-coordinate line
zry	rotational deviation j_y measured along a z-coordinate line
zrz	rotational deviation j_z measured along a z-coordinate line
$\cos(\varphi_i)$	rotational correction, for example in pitch measurement

© ISO 2019 – All rights reserved

Documents
Document Sharing Hub
Full document details: BS ISO 11952:2019

$\cos(\theta_i)$	tilt-related correction, for example in pitch measurement
λ_s	short-wavelength filter (see ISO 4287 for details)
λ_c	long-wavelength filter (see ISO 4287 for details)
Λ	correlation length
ϕ_{xy}	angle between the *x*- and *y*-direction, counterclockwise
ϕ_{xz}	angle between the *x*- and *z*-direction, counterclockwise
ϕ_{yz}	angle between the *y*- and *z*-direction, counterclockwise
Rqx	noise in the *x*-direction
Rqy	noise in the *y*-direction
Rqz (Sqz)	noise in the *z*-direction in a measured profile (or within a measured area)
v	scan speed (i.e. distance travelled by the probe tip per unit time, not to be confused with the scan rate, i.e. the number of scanlines recorded per unit time)

5 Characteristics of SPMs

5.1 Components of an SPM

© ISO 2019 – All rights reserved
Documents
Document Sharing Hub
Full document details: BS ISO 11952:2019

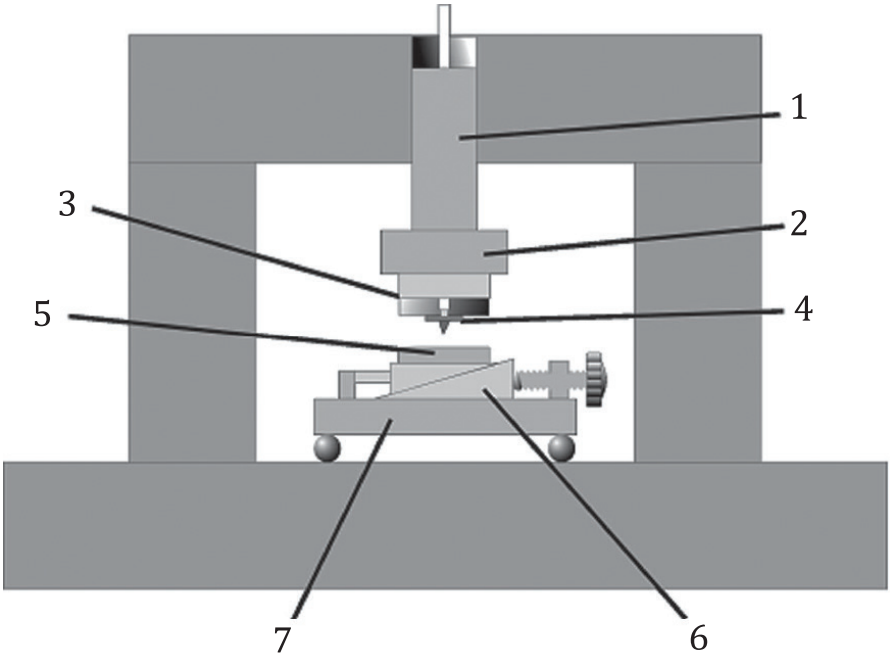

Key

1 *x-y*-scanner

2 *z*-scanner

3 position detector

4 probe

5 specimen

6 coarse *z*-approach, i.e. move the probe or the specimen in the vertical direction to bring it close enough to the specimen or probe, respectively (afterwards, start automatic approach techniques)

7 coarse *x-y*-positioning, i.e. move the specimen or probe laterally close to or into the region of interest on the specimen

Figure 3 — Schematic sketch of an SPM

Several components shown in Figure 3 are defined in ISO 18115-2. In this document, they fulfil the following functions:

— *Probe:* equipped with a tip at its apex. This probes the specimen surface, exploiting a local physical interaction whose changes can be detected, for example cantilever bending in the case of an atomic force microscope.

— *Position detector:* transformation of the probe's interaction response (e.g. bending or oscillation of the cantilever) into an electrical signal.

— *z-scanner:* element for the realization of the vertical tracking of the specimen/probe distance during *x-y*-scanning to a constant value of the physical interaction used for distance control (e.g. of the action of force on the probe in the case of an atomic force microscope), to ensure an approximately constant distance between specimen and probe.

— *x-y-scanner:* element for realization of the lateral displacement of the probe (or of the specimen) in the *x-y*-plane (the plane parallel to the seating face of the specimen), which is used, among other things, to record a location-dependent interaction signal that contains information about a local property of the specimen (above all, the local height).

— *Specimen holder:* where appropriate, with coarse positioning and coarse approach mechanics.

— *Casing/mounting:* structure for mounting the scanner and specimen.

© ISO 2019 – All rights reserved

Documents
Document Sharing Hub
Full document details: BS ISO 11952:2019

5.2 Metrological categories of SPMs

SPMs can generally be subdivided into the three following categories, depending on their metrological equipment:

— category A: reference instruments with integrated laser interferometers, allowing direct traceability, via the wavelength of the laser used, to the SI unit of length[1)].

— category B: SPMs with position measurement using displacement transducers, for example capacitive/inductive sensors, strain gauges or encoders calibrated by temporarily connecting laser interferometers to the instrument or by making measurements on high-quality measurement standards. A distinction is made between the following two types:

  — those with active position control: tracking to a scheduled position by means of a closed loop (so-called closed-loop configuration);

  — those with position measurement but without a closed loop for position control (so-called open-loop configuration).

— category C: SPMs in which the position is determined from the electrical voltage applied to the adjustment elements and, if need be, corrected using the look-up table. Calibration is against measurement standards.

These definitions of metrological categories imply that it is not possible for certain instruments to be assigned to a single category, but that, with respect to their scan axes, they need to be considered separately.

5.3 Block diagram of an SPM

The block diagram shown in Figure 4 has been obtained from the schematic diagram of an SPM in Figure 3. The characteristics of the essential components are given below and need to be investigated individually in the course of verification and calibration.

5.3.1 For category C:

— casing/mounting (mechanical, acoustic, electromagnetic and thermal characteristics);

— specimen holder, where appropriate with coarse positioning and coarse approach mechanics (acoustic, mechanical and thermal characteristics);

— *z*-scanner;

— *x*-*y*-scanner;

— detector loop, for example using the beam deflection method, with a beam on the rear side of the cantilever in the case of an atomic force microscope and detection of the reflected beam from the rear side of the cantilever with a position-sensitive photodiode. The signal of the position-dependent photodiode serves as input to the feedback loop of the z-scanner in order to keep the set-point constant;

— probe.

5.3.2 Additionally, for category B:

— category B2: *x*-, *y*- and/or *z*-displacement transducer, for example encoder, capacitive or inductive displacement transducer or strain gauge;

— category B1: where appropriate, active (closed-loop) position control.

1) Instruments of this category are often referred to as “metrological SPMs”, although the definition of a “metrological SPM” in ISO 18115-2:2013 does not necessarily imply laser-interferometric position control.

© ISO 2019 – All rights reserved
AVA Documents Document Sharing Hub
Full document details: BS ISO 11952:2019

5.3.3 Additionally, for category A:

Traceability by integrated laser interferometers, i.e. systems as for category B, but equipped with:

— integrated laser interferometers for position measurement/control;

— where appropriate, additional angle sensors.

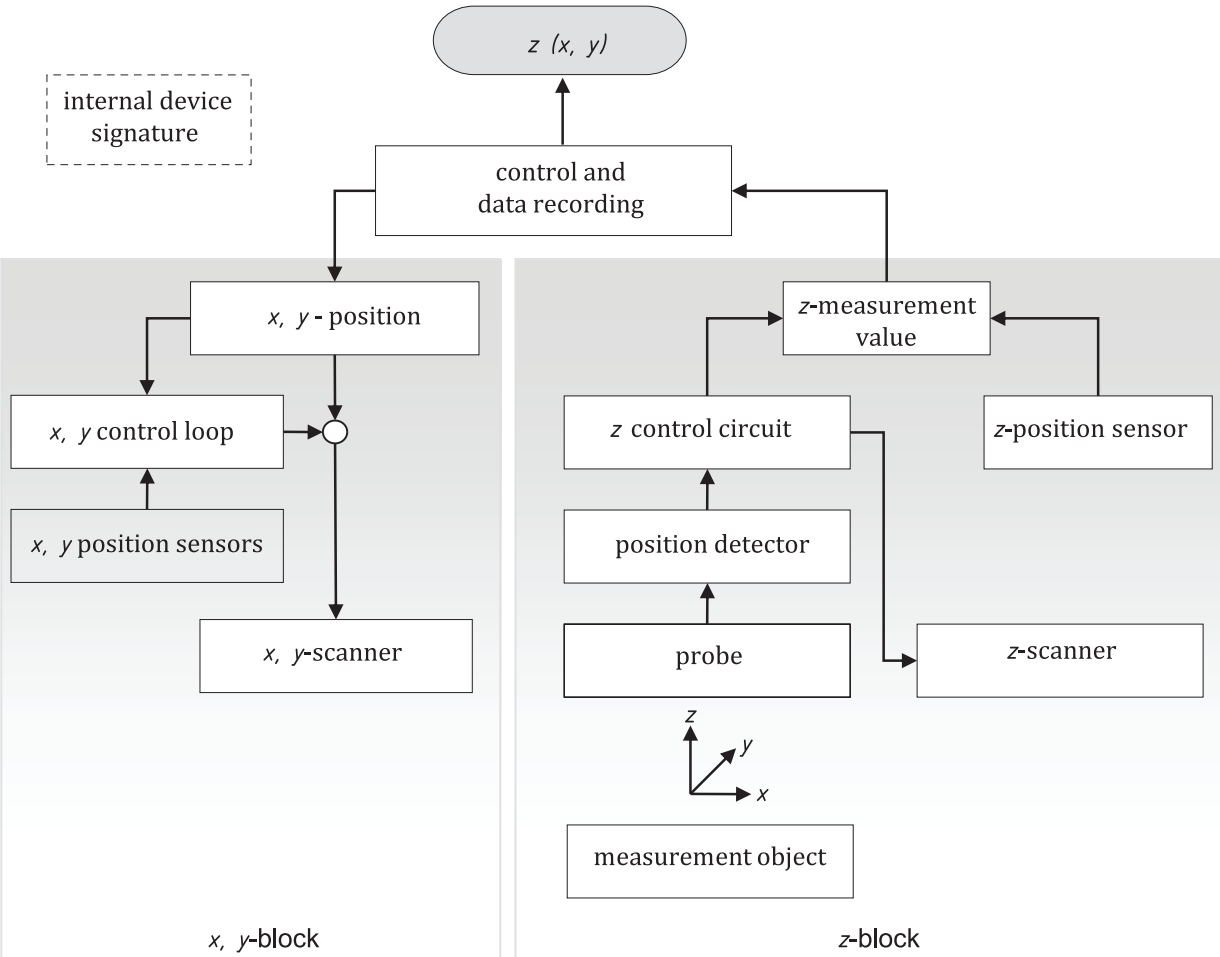

Figure 4 — Block diagram of an SPM

The classification above is a first rough estimation of the effort necessary to achieve the desired accuracy of calibration. It is not necessary, for example, to purchase a set of measurement standards with minimum uncertainties of measurement for the calibration of category C instruments. Less sophisticated measurement standards are usually sufficient here.

5.4 Calibration interval

The interval at which the instrument will need to be calibrated depends on the type of instrument (i.e. the metrological category), its stability, especially with respect to time, the intended purpose of the measurements and the constancy of the ambient conditions. As most calibrations are of a complex nature, and thus, are labour- and time-intensive, a compromise needs to be found between the cost of calibration and the measurement uncertainty which can be tolerated.

Generally, the following repetition patterns for calibrations (K) and measurements (M) are suitable.

© ISO 2019 – All rights reserved

Documents
Document Sharing Hub
Full document details: BS ISO 11952:2019

KMM …, KMM … for instruments of high stability in the medium term: calibration is necessary only at defined intervals of time, for example once weekly/monthly/yearly.

KM, KM, KM … for instruments with acceptable short-term but bad long-term stability: calibration is necessary before each measurement.

KMK, KMK … when the maximum precision of the instrument is to be used for measurements with as small an uncertainty of measurement as possible or for instruments which are unstable with time and therefore require the drift in their characteristics to be taken into account as far as possible.

Especially after putting into operation an SPM which is new or has been modified or relocated, it is advisable in the initial phase to repeat a defined calibration pattern several times in order to gain experience with the stability of the instrument.

6 Preliminary characterization of the measuring system

6.1 Overview of the instrument characteristics and influencing factors to be investigated

In order to define a calibration schedule for a particular SPM, three groups of influencing factors need to be investigated in detail (see Figure 5): the instrument's characteristics (as described above), the ambient conditions and the effects of operation by the user.

These investigations should be carried out in the following order, prior to the calibration process proper:

a) investigation of the waiting time after putting the instrument into operation (e.g. warm-up, initial drift) (see 6.2);

b) investigation of the waiting time after changing the specimen or probe or other interventions before sufficiently stable conditions of measurement are reached (see 6.2);

c) the influence of the ambient conditions, such as producing a temporary drift and/or changes in temperature, air humidity, air flow, mechanical and acoustic vibrations, electromagnetic interference (see 6.3);

d) the noise of the instrument (see 6.3 and also Table 1);

e) *xy*-scanner/*z*-scanner-guidance deviations (cross-talk from one scan axis to other axes, which can, at times, be detectable only by repeated measurements) (see 7.3);

f) long-term stability (reproducibility) (see 5.4).

These investigations can be carried out as qualitative and/or quantitative tests. For qualitative tests, specimens with the desired properties (e.g. silicon wafers, glass plates) are sufficient, whereas for quantitative tests calibrated measurement standards are required for precise work. This is described in Clause 7.

The investigations described below should be performed with probes which are usually used for measurements with the instrument in question and on the specimens to be examined. Ageing of the probe tips can be identified with the aid of suitable tests[44] to [47]. Tips showing excessive wear should not be used.

The first step should be aimed at separating the various influences, for example by cutting out external influences and allowing them back in (to the extent possible), and then successively varying the operator-related settings.

© ISO 2019 – All rights reserved
Documents
Document Sharing Hub
Full document details: BS ISO 11952:2019

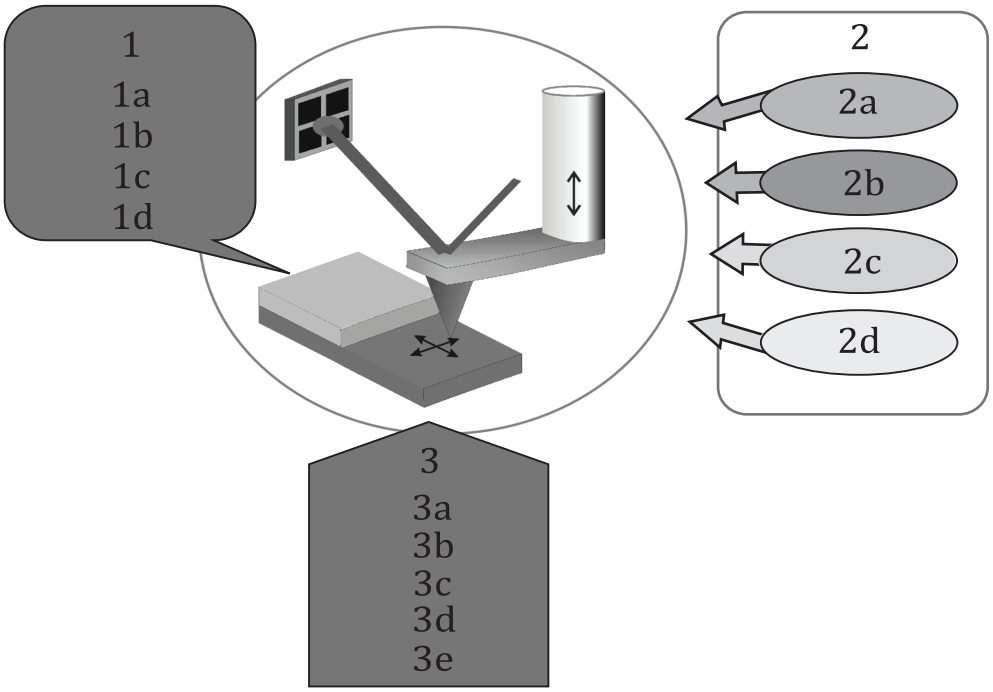

Key

1	intrinsic influences	2d	temperature changes
1a	probe-guidance deviations	3	operator-related settings
1b	signal drift	3a	parameter settings for the feedback loop, i.e. proportional (*P*) and integral (*I*) gain
1c	mechanical stress	3b	scan range
1d	electronic noise	3c	scan speed/scan rate
2	extrinsic influences	3d	forward/backward scan
2a	mechanical vibration	3e	features of probe and specimen
2b	acoustic vibration		
2c	electrical noise		

Figure 5 — The three groups of factors influencing the measurement process

© ISO 2019 – All rights reserved

Documents
Document Sharing Hub
Full document details: BS ISO 11952:2019

Table 1 — Influence of ambient conditions and noise of the instrument

Characteristics		Specimen and method of investigation	Subclause
Drift	Vertical	Flatness measurement standard or specimen with known flat regions (Rq or Sq < 2 nm, P-V < 10 nm) Variation of ambient conditions, opening of chamber, switching on/off of instrument components	6.2
	Lateral	Specimen with straight edges or lines of small step height, aligned parallel or vertical to the scan direction 2D grating of small step height	6.2 7.5
z-Noise	Static: without movement in x or y	After stabilization of the instrument measurement of flatness measurement standards with x-y-movements switched off. In addition, variation of ambient conditions, i.e. mechanical damping, acoustic oscillations, electromagnetic shielding	
	Dynamic: scanning in x or y	After stabilization of the instrument fast recording of two or more scan lines. The difference between the lines provides information about dynamic noise components	

The separation of the contributions is the basis for the introduction of suitable optimization procedures, the use of correction procedures (if these two are not feasible) or adequate inclusion in the uncertainty budget[14][16][17]. Table 1 can serve to make a distinction between temporary drift and permanent guidance deviations as well as between different contributions to the noise (see also example in Annex A).

6.2 Waiting times after interventions in the measuring system (e.g. instrument installation, intrinsic effects, carrying out operation, warm-up, tip/specimen change)

6.2.1 Adjustment of the instrument to ambient conditions

The waiting times investigated in this subclause relate to an instrument which has already adjusted to its ambient conditions. After rearrangement and installation of the instrument or relocation to another room, about 24 h are typically to be allowed for acclimatization.

6.2.2 Potential causes of drift

During the warm-up phase after switching on the instrument, or after interventions such as changing or repositioning the probe/tip and specimen, the following effects might influence the measurements:

— piezo drift or piezo creep in the lateral/vertical direction;

— mechanical stresses, for example acting on the specimen holder and its mounting (e.g. adhesive);

— mechanical expansion of the components (casing, measurement circle);

— changes in the properties of the electronics.

As drift usually disappears after some time, the required waiting time is to be determined. For the electronics, a warm-up period of at least 30 min is to be reckoned with. For the other drift contributions, however, no generally valid decay times can be given, as they depend on the particular type of instrument.

6.2.3 Procedure

Follow the procedure for drift determination as specified in ISO 11039.

© ISO 2019 – All rights reserved
Documents
Document Sharing Hub
Full document details: BS ISO 11952:2019