BRITISH STANDARD

BS ISO 12003-1:2008

Agricultural and forestry tractors — Roll-over protective structures on narrow-track wheeled tractors

Part 1: Front-mounted ROPS

ICS 65.060.10

NO COPYING WITHOUT BSI PERMISSION EXCEPT AS PERMITTED BY COPYRIGHT LAW

Documents
Document Sharing Hub
British Standards

Full document details: BS ISO 12003-1:2008

National foreword

This British Standard is the UK implementation of ISO 12003-1:2008. It supersedes BS ISO 12003-1:2002 which is withdrawn.

The UK participation in its preparation was entrusted to Technical Committee AGE/6, Agricultural tractors and forestry machinery.

A list of organizations represented on this committee can be obtained on request to its secretary.

This publication does not purport to include all the necessary provisions of a contract. Users are responsible for its correct application.

Compliance with a British Standard cannot confer immunity from legal obligations.

This British Standard was published under the authority of the Standards Policy and Strategy Committee on 28 February 2009

© BSI 2009

ISBN 978 0 580 57031 5

Amendments/corrigenda issued since publication

Date	Comments

Documents
Document Sharing Hub

Full document details: BS ISO 12003-1:2008

INTERNATIONAL STANDARD

ISO 12003-1

Second edition
2008-08-01

Agricultural and forestry tractors — Roll-over protective structures on narrow-track wheeled tractors —

Part 1: Front-mounted ROPS

Tracteurs agricoles et forestiers — Structures de protection contre le retournement (ROPS) pour tracteurs à roues à voie étroite —

Partie 1: ROPS montées à l'avant

Reference number
ISO 12003-1:2008(E)

Documents
Document Sharing Hub
© ISO 2008

Full document details: BS ISO 12003-1:2008

PDF disclaimer

This PDF file may contain embedded typefaces. In accordance with Adobe's licensing policy, this file may be printed or viewed but shall not be edited unless the typefaces which are embedded are licensed to and installed on the computer performing the editing. In downloading this file, parties accept therein the responsibility of not infringing Adobe's licensing policy. The ISO Central Secretariat accepts no liability in this area.

Adobe is a trademark of Adobe Systems Incorporated.

Details of the software products used to create this PDF file can be found in the General Info relative to the file; the PDF-creation parameters were optimized for printing. Every care has been taken to ensure that the file is suitable for use by ISO member bodies. In the unlikely event that a problem relating to it is found, please inform the Central Secretariat at the address given below.

COPYRIGHT PROTECTED DOCUMENT

© ISO 2008

All rights reserved. Unless otherwise specified, no part of this publication may be reproduced or utilized in any form or by any means, electronic or mechanical, including photocopying and microfilm, without permission in writing from either ISO at the address below or ISO's member body in the country of the requester.

ISO copyright office
Case postale 56 • CH-1211 Geneva 20
Tel. + 41 22 749 01 11
Fax + 41 22 749 09 47
E-mail copyright@iso.org
Web www.iso.org

Published in Switzerland

© ISO 2008 – All rights reserved

Documents
Document Sharing Hub

Full document details: BS ISO 12003-1:2008

Contents

Page

Foreword v

Introduction vi

1 Scope 1

2 Normative references 1

3 Terms and definitions 2

4 Symbols 4

5 Preliminary tests 4
5.1 General requirements 4
5.2 Lateral stability test 5
5.3 Non-continuous rolling test 5

6 Tractor and test preparation 6
6.1 Test methods 6
6.2 General rules governing preparation for tests 6

7 Test apparatus and equipment 7
7.1 Apparatus for both dynamic and static testing 7
7.2 Apparatus for dynamic testing 9
7.3 Apparatus for static testing 14

8 Test procedures 14
8.1 General requirements 14
8.2 Test sequence 15
8.3 Rear fixture test procedure 15
8.4 Dynamic (impact) test procedures for front-mounted ROPS 15
8.5 Static test procedures for front-mounted ROPS 18
8.6 Vertical crushing test procedure 19
8.7 Additional crushing tests 20
8.8 Observations during testing 20

9 Seat index point 20

10 Clearance zone 20
10.1 General 20
10.2 Clearance zone for tractors with a non-reversible seat 21
10.3 Clearance zone for tractors with a reversible driving position 22

11 Tolerances 23

12 Acceptance conditions 23
12.1 General requirements 23
12.2 After impact loads 24
12.3 After static horizontal loads 24
12.4 Cold weather embrittlement 25

13 Extension to other models 27

14 Labelling 28

15 Test report 28

Annex A (normative) **Requirements for providing resistance to brittle fracture of front-mounted ROPS at a reduced operation temperature** 29

Annex B (normative) **Test report for front-mounted ROPS** 31

Documents
Document Sharing Hub

© ISO 2008 – All rights reserved

Full document details: BS ISO 12003-1:2008

Annex C (normative) **Non-continuous rolling test procedure — Calculation method** **40**

Bibliography **44**

© ISO 2008 – All rights reserved

Documents
Document Sharing Hub

Full document details: BS ISO 12003-1:2008

Foreword

ISO (the International Organization for Standardization) is a worldwide federation of national standards bodies (ISO member bodies). The work of preparing International Standards is normally carried out through ISO technical committees. Each member body interested in a subject for which a technical committee has been established has the right to be represented on that committee. International organizations, governmental and non-governmental, in liaison with ISO, also take part in the work. ISO collaborates closely with the International Electrotechnical Commission (IEC) on all matters of electrotechnical standardization.

International Standards are drafted in accordance with the rules given in the ISO/IEC Directives, Part 2.

The main task of technical committees is to prepare International Standards. Draft International Standards adopted by the technical committees are circulated to the member bodies for voting. Publication as an International Standard requires approval by at least 75 % of the member bodies casting a vote.

Attention is drawn to the possibility that some of the elements of this document may be the subject of patent rights. ISO shall not be held responsible for identifying any or all such patent rights.

ISO 12003-1 was prepared by Technical Committee ISO/TC 23, *Tractors and machinery for agriculture and forestry*, Subcommittee SC 2, *Common tests*.

This second edition cancels and replaces the first edition (ISO 12003-1:2002), which has been technically revised.

ISO 12003 consists of the following parts, under the general title *Agricultural and forestry tractors — Roll-over protective structures on narrow-track wheeled tractors*:

— *Part 1: Front-mounted ROPS*

— *Part 2: Rear-mounted ROPS*

© ISO 2008 – All rights reserved

Documents
Document Sharing Hub
Full document details: BS ISO 12003-1:2008

Introduction

Testing of roll-over protective structures (ROPS) for narrow-track tractors for agriculture and forestry aims at minimizing the likelihood of driver injury resulting from accidental overturning during normal operation (e.g. field work) of the tractor. The strength of the front-mounted ROPS is tested by applying either static or dynamic (impact) loads to simulate actual loads which may be imposed on the front-mounted ROPS when the tractor overturns either to the rear or to the side without free fall. The tests allow observations to be made on the strength of the front-mounted ROPS and the attachment brackets to the tractor and also of the tractor parts that may be affected by the load imposed on the front-mounted ROPS.

Provision is made to cover both tractors with the conventional forward facing driver's position only and those with a reversible driver's position, which is in agreement with the relevant OECD test code practice (Reference [5]). For tractors with a reversible driver's position, a clearance zone is defined to be the combined clearance zones for the two driving positions.

It is recognized that there may be designs of tractors, e.g. lawn-mowers, and certain forestry machines such as forwarders, for which this part of ISO 12003 is not appropriate.

NOTE For regular tractors, see ISO 3463[3] (dynamic test) and ISO 5700[4] (static test).

© ISO 2008 – All rights reserved
Documents
Document Sharing Hub
Full document details: BS ISO 12003-1:2008

INTERNATIONAL STANDARD ISO 12003-1:2008(E)

Agricultural and forestry tractors — Roll-over protective structures on narrow-track wheeled tractors —

Part 1:
Front-mounted ROPS

1 Scope

This part of ISO 12003 specifies procedures for both the static and dynamic testing of roll-over protective structures (ROPS) front-mounted on narrow-track wheeled agricultural and forestry tractors. It defines the clearance zone and acceptance conditions for rigid or tiltable, front, two-post ROPS, including any associated rear fixtures, and is applicable to tractors so equipped having the following characteristics.

— A ground clearance of not more than 600 mm beneath the lowest points of the front- and rear-axle housings (not considering lower points on the axle differential).

— A fixed or adjustable minimum track width of one of the two axles of less than 1 150 mm when fitted with the widest specified tyres. It is understood that the axle mounted with the wider tyres is set at a track width of not more than 1 150 mm. It shall be possible to set the track width of the other axle in such a way that the outer edges of the narrower tyres do not extend beyond the outer edges of the tyres of the other axle. Where the two axles are fitted with rims and tyres of the same size, the fixed or adjustable track width of the two axles shall be less than 1 150 mm.

— A mass greater than 600 kg but less than 3 000 kg, unladen, including the ROPS and tyres of the largest size recommended by the manufacturer.

2 Normative references

The following referenced documents are indispensable for the application of this document. For dated references, only the edition cited applies. For undated references, the latest edition of the referenced document (including any amendments) applies.

ISO 630, *Structural steels — Plates, wide flats, bars, sections and profiles*

ISO 898-1:1999, *Mechanical properties of fasteners made of carbon steel and alloy steel — Part 1: Bolts, screws and studs*

ISO 898-2:1992, *Mechanical properties of fasteners — Part 2: Nuts with specified proof load values — Coarse thread*

ISO 2408, *Steel wire ropes for general purposes — Minimum requirements*

ISO 5353, *Earth-moving machinery, and tractors and machinery for agriculture and forestry — Seat index point*

© ISO 2008 – All rights reserved

Documents
Document Sharing Hub
Full document details: BS ISO 12003-1:2008

ASTM A370, *Standard Test Methods and Definitions for Mechanical Testing of Steel Products*

ASAE[1)] S313.3, *Soil Cone Penetrometer*

ASAE[1)] EP542, *Procedures for Using and Reporting Data Obtained with the Soil Cone Penetrometer*

3 Terms and definitions

For the purposes of this document, the following terms and definitions apply.

3.1
roll-over protective structure
ROPS
framework protecting drivers of wheeled agricultural and forestry tractors, which minimizes the likelihood of driver injury resulting from accidental overturning during normal field work

NOTE The ROPS is characterized by the provision of space for a clearance zone, either inside the envelope of the structure or within a space bounded by a series of straight lines from the outer edges of the structure to any part of the tractor that might come into contact with the ground; it is capable of supporting the tractor in an overturned position.

3.2
front-mounted ROPS
two-post roll-over protective structure mounted on the tractor in front of the driver and with a reduced clearance zone

NOTE Compare with rear-mounted ROPS described in ISO 12003-2.

3.3
rear fixture
component such as the rear tyre (measured at its specified smallest diameter), mudguard or other rigid tractor components, or all of these, or a supplementary fixture of requisite width, height and strength installed behind the driver's seat, which completes the front-mounted ROPS' clearance zone for strength testing

3.4
tractor mass
mass of the unladen tractor in working order with tanks and radiator full, front-mounted ROPS and any equipment required for normal use

NOTE The operator, optional ballast weights, additional wheel equipment, and special equipment and tools are not included.

3.5
reference mass
mass, not less than the tractor mass, selected by the manufacturer for calculation of loading energies and forces to be applied in the tests

1) American Society of Agricultural Engineers.

© ISO 2008 – All rights reserved
Documents
Document Sharing Hub
Full document details: BS ISO 12003-1:2008

3.6
longitudinal median plane
longitudinal plane of symmetry
zero Y plane
vertical plane Y passing through the mid-points of AB, perpendicular to AB, where, for each wheel, the vertical plane passing through its axis cuts the mid-plane of the wheel following a straight line Δ which meets the supporting surface of the vehicle at one point, and where A and B are two points thus defined which correspond to two wheels, both of which are either steering or powered wheels, situated respectively at the two ends of the same real or imaginary axle

See Figure 1.

NOTE 1 "Mid-plane of the wheel" designates the plane equidistant from the inner edges of the rim. In the case of dual wheels, the straight line Δ is, in this particular case, the intersection of the mid-plane of the dual wheels and the vertical plane passing through the axis of the axle pin.

NOTE 2 Adapted from ISO 612:1978[1], Clause 5.

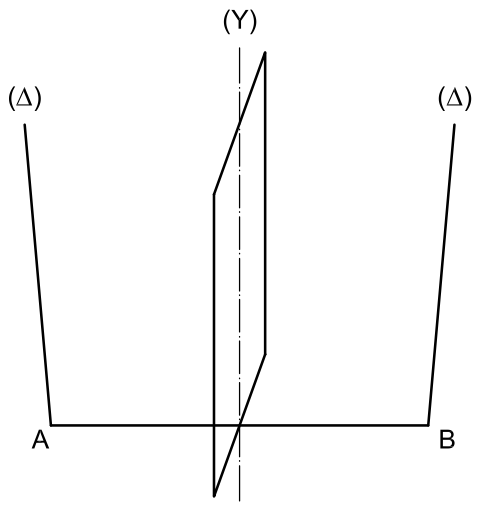

Figure 1 — Longitudinal median plane

3.7
reference plane
vertical plane, generally longitudinal to the tractor and passing through the seat index point and the steering-wheel centre

NOTE Normally this reference plane coincides with the longitudinal median plane of the tractor.

3.8
wheelbase
horizontal distance between the two vertical planes passing through the rotational centre-lines of the wheels, where one plane is for the front wheels and the other for the rear wheels

© ISO 2008 – All rights reserved

Documents
Document Sharing Hub
Full document details: BS ISO 12003-1:2008

4 Symbols

See Table 1.

Table 1 — Symbols

Symbol	Description	Unit
a	Ratio of permanent deflection to elastic deflection measured at the point of impact during the dynamic tests	mm/mm
a_h	Half of the horizontal seat adjustment	mm
a_v	Half of the vertical seat adjustment	mm
B	Minimum overall width of the tractor	mm
B_b	Maximum outer width of the front-mounted ROPS	mm
D	Deflection of the front-mounted ROPS at the point of, and in line with, the load application (static test)	mm
D'	Deflection of calculated energy required	mm
E_i	Strain energy absorbed; area under F-D curve	J
E_{il}	Energy to be absorbed during longitudinal loading	J
E_{is}	Energy to be absorbed during side loading	J
F	Static load force	N
F_i	Force applied to the rear fixture	N
F'	Loading force for the calculated energy required	N
F_{max}	Maximum static load force occurring during loading, with the exception of overload	N
F_v	Vertical crushing force	N
H	Falling height of the pendulum block	mm
I	Moment of inertia about rear axle, whatever the mass of the rear wheels may be	kg·m^2
L	Tractor reference wheelbase	mm
m	Tractor mass (see 3.4)	kg
m_t	Reference mass (see 3.5)	kg
NOTE See Annex C for characteristic tractor data symbols used in the calculation of non-continuous rolling.		

5 Preliminary tests

CAUTION — Some of the tests specified in this part of ISO 12003 involve the use of processes which could lead to a hazardous situation.

5.1 General requirements

5.1.1 Front-mounted ROPS may only be applied to tractors that satisfactorily complete both the lateral stability test and the non-continuous rolling test described in this clause.

5.1.2 The tractor shall be equipped with the front-mounted ROPS fitted in its upright (safety) position.

5.1.3 The tractor shall be equipped with tyres having the greatest diameter indicated by the manufacturer and the smallest cross-section for tyres of that diameter. The tyres shall not be liquid-ballasted and shall be inflated to the pressure recommended for field work.

© ISO 2008 – All rights reserved
Documents
Document Sharing Hub
Full document details: BS ISO 12003-1:2008

5.1.4 The rear wheels shall be set to the narrowest track width; the front wheels shall be set as closely as possible to the same track width. If it is possible to have two front track settings which differ equally from the narrowest rear track setting, the wider of these two front track settings shall be selected.

5.1.5 All the tractor's tanks shall be filled or the liquids shall be replaced by an equivalent mass in the corresponding position.

5.1.6 All attachments used in the series production shall be fixed to the tractor in the normal position.

5.2 Lateral stability test

5.2.1 The tractor, prepared as specified above, shall be placed on a horizontal plane so that the tractor front-axle pivot point or, in the case of an articulated tractor, the horizontal pivot point between the two axles can move freely.

5.2.2 Using a jack or a hoist, tilt the part of the tractor which is rigidly connected to the axle that bears more than 50 % of the tractor's weight, while constantly measuring the angle of inclination. This angle shall be at least 38° at the moment when the tractor is resting in a state of unstable equilibrium with the wheels touching the ground. Perform the test once with the steering wheel turned to full right lock and once with the steering wheel turned to full left lock.

5.3 Non-continuous rolling test

5.3.1 General

This test is intended to demonstrate that the front-mounted ROPS, when fitted to the tractor, is capable of preventing continuous rolling of the tractor in the event of a lateral overturn on a slope with a gradient of 1 in 1,5. Two alternative procedures are provided to demonstrate non-continuous rolling behaviour in subclauses 5.3.2 and 5.3.3. It is necessary to perform only one of these procedures.

5.3.2 Demonstration of non-continuous rolling behaviour by means of the overturning test

5.3.2.1 The overturning test shall be carried out on a test slope at least 4 m long (see Figure 2). The surface shall be covered with an 18 cm layer of a material that, as measured in accordance with Standards ASAE S313.3 and ASAE EP542 relating to soil cone penetrometers, has a cone penetration index of:

$$A_{CP} = 235 \pm 20$$

or

$$B_{CP} = 335 \pm 20$$

NOTE In the OECD Standard Code 6 and in Standard ASAE S313.3 the symbols for the cone penetration indices are A and B. These have been modified in this part of ISO 12003 in conformance with rules laid down in ISO/IEC Directives Part 2.

© ISO 2008 – All rights reserved

Documents
Document Sharing Hub
Full document details: BS ISO 12003-1:2008

Dimensions in millimetres

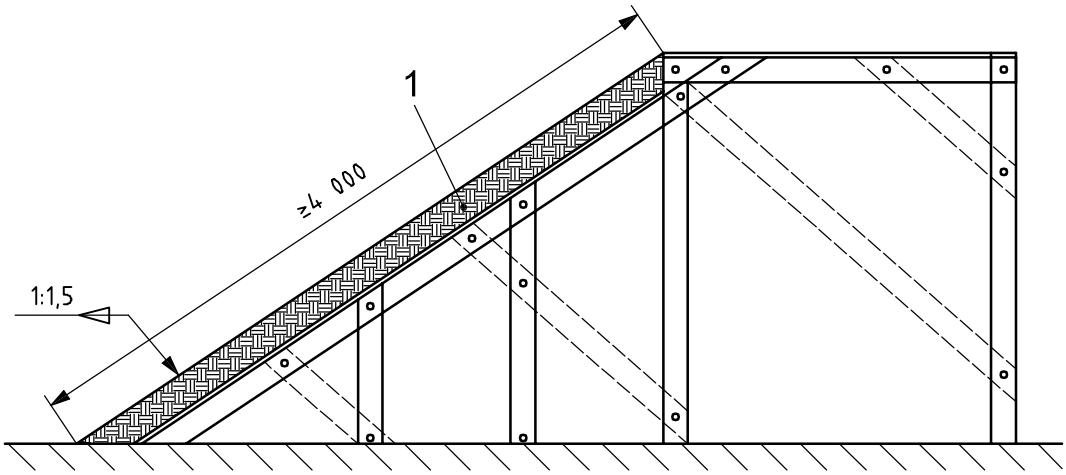

Key

1 18 cm layer of material

Figure 2 — Rig for testing anti-roll properties

5.3.2.2 The tractor (prepared as described in 5.1) shall be tilted laterally with zero initial speed. For this purpose, the tractor is placed at the start of the test slope in such a way that the wheels on the downhill side rest on the slope and the tractor's median plane is parallel with the contour lines. After striking the surface of the test slope, the tractor may lift itself from the surface by pivoting about the upper corner of the front-mounted ROPS, but it shall not roll over. It shall fall back on the side which it first struck.

5.3.3 Demonstration of non-continuous rolling behaviour by calculation

Non-continuous rolling behaviour may also be demonstrated by complying with the requirements of Annex C.

6 Tractor and test preparation

6.1 Test methods

Tests can be performed in accordance with either the dynamic procedure or the static procedure. The two methods are determined to be equivalent.

6.2 General rules governing preparation for tests

6.2.1 The front-mounted ROPS shall conform to the series production specifications. It shall be attached in accordance with the manufacturer's recommended method to one of the tractors for which it is designed.

NOTE A complete tractor is not required for the static procedure; however, the front-mounted ROPS and parts of the tractor to which the front-mounted ROPS is attached represent an operating installation hereafter referred to as the assembly.

6.2.2 For both the static and dynamic procedures, the tractor as assembled (or the assembly) shall be fitted with all series production components which may affect the strength of the front-mounted ROPS or which may be necessary for the strength test.

6.2.3 All components of the tractor or the front-mounted ROPS, including weather protection, shall be supplied or described on drawings.

© ISO 2008 – All rights reserved
Documents
Document Sharing Hub
Full document details: BS ISO 12003-1:2008

6.2.4 For the strength tests, all removable panels and detachable non-structural components shall be removed so that they do not contribute to the strength of the front-mounted ROPS.

6.2.5 The track width shall be adjusted so that the front-mounted ROPS will, as far as possible, not be supported by the tyres during the strength tests. If these tests are conducted according to the static procedure, the wheels may be removed.

7 Test apparatus and equipment

7.1 Apparatus for both dynamic and static testing

7.1.1 Clearance zone framework

Means to prove that the clearance zone has not been entered during the test: a measuring rig complying with Figures 10 and 11 can be used.

7.1.2 Apparatus for crushing tests

The crushing tests shall be carried out by means of the elements described in 7.1.2.1 to 7.1.2.3.

7.1.2.1 Means to apply downward force on the front-mounted ROPS, such as that shown in Figure 3, including a stiff beam with a width of 250 mm.

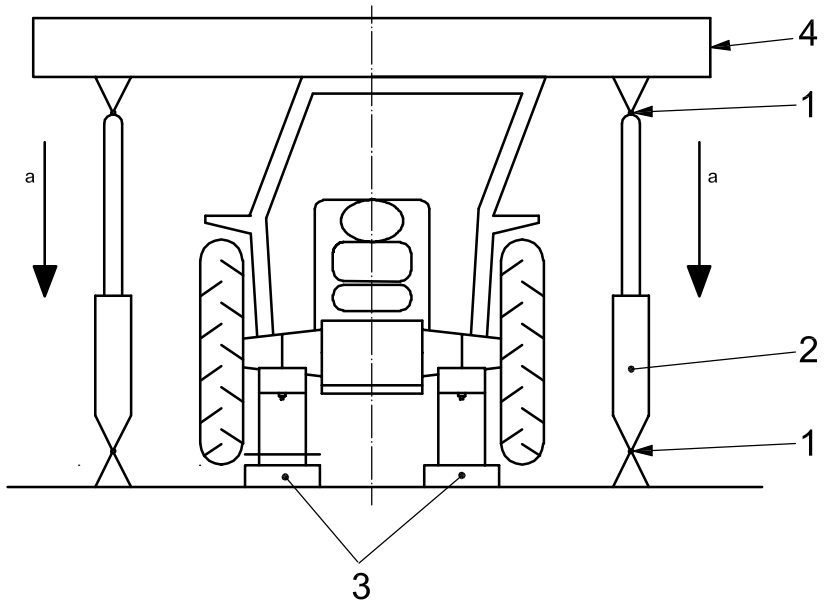

Key

1 universal pin joints
2 hydraulic cylinder
3 supports
4 crushing beam

[a] Direction of force.

Figure 3 — Crushing rig — Example

© ISO 2008 – All rights reserved

Documents
Document Sharing Hub
Full document details: BS ISO 12003-1:2008

7.1.2.2 Equipment to measure total vertical force applied.

7.1.2.3 Suitable axle stands, so that the tractor tyres do not bear the crushing force.

7.1.3 Device to measure elastic deflection

Device to measure elastic deflection, such as that shown in Figure 4, in a horizontal plane that coincides with the upper limiting surface of the clearance zone.

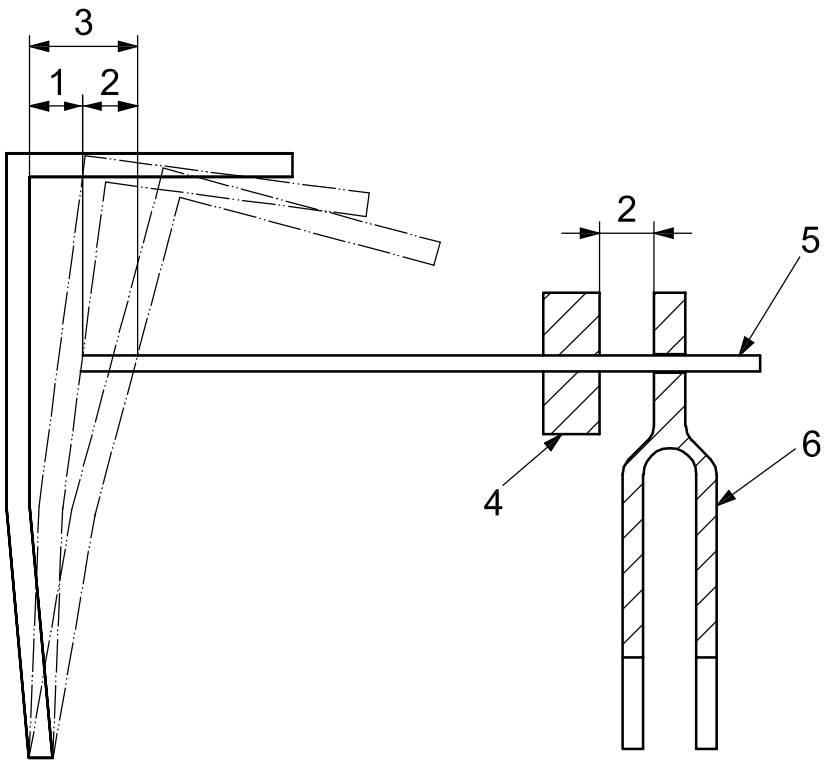

Key

1 permanent deflection
2 elastic deflection
3 total deflection
4 friction collar
5 horizontal rod attached to ROPS
6 vertical support attached to tractor chassis

Figure 4 — Apparatus for measuring elastic deflection — Example

© ISO 2008 – All rights reserved
Documents
Document Sharing Hub
Full document details: BS ISO 12003-1:2008

7.1.4 Rear hard fixture test rig

A rig to apply a force as shown in Figure 5.

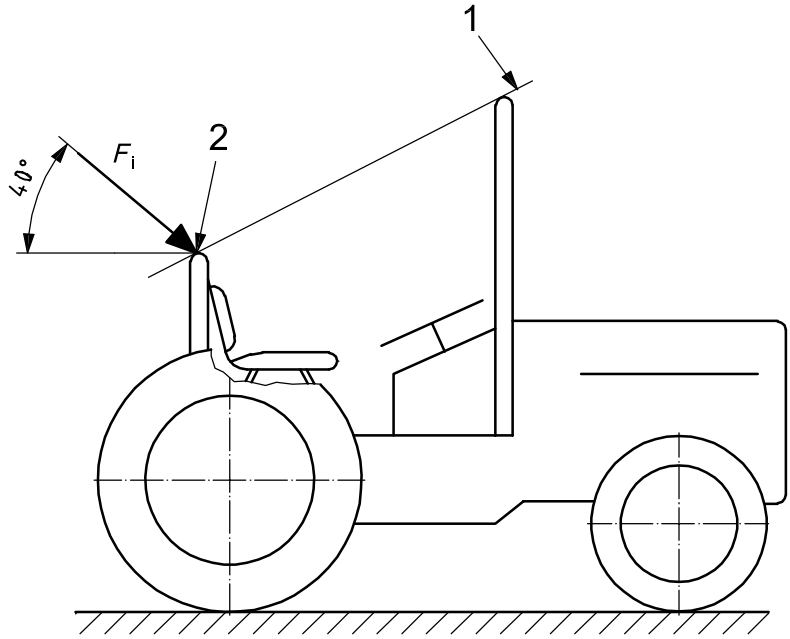

Key

1 simulated ground line

2 supplementary (rear) fixture

Figure 5 — Test force direction

7.2 Apparatus for dynamic testing

7.2.1 Device to strike a blow against the front-mounted ROPS

A pendulum block with mass of 2 000 kg. The pendulum block mass does not include the mass of the chains. The maximum chain mass shall be 100 kg. The dimensions of the block that shall be suspended from two chains from pivot points 6 m or more above ground level shall be as shown in Figure 6. The pendulum block centre of gravity shall coincide with its geometric centre. Means shall be provided for independently adjusting the height of the pendulum block and the angle between the pendulum block and the supporting chains or wire rope.

© ISO 2008 – All rights reserved

Documents
Document Sharing Hub
Full document details: BS ISO 12003-1:2008