BS ISO 12003-1:2021

BSI Standards Publication

Tractors for agriculture and forestry — Roll-over protective structures on narrow tractors

Part 1: Front-mounted ROPS

Documents
Document Sharing Hub

Full document details: BS ISO 12003-1:2021

National foreword

This British Standard is the UK implementation of ISO 12003-1:2021. It supersedes BS ISO 12003-1:2008, which is withdrawn.

The UK participation in its preparation was entrusted to Technical Committee AGE/6, Agricultural tractors and forestry machinery.

A list of organizations represented on this committee can be obtained on request to its committee manager.

Contractual and legal considerations

This publication has been prepared in good faith, however no representation, warranty, assurance or undertaking (express or implied) is or will be made, and no responsibility or liability is or will be accepted by BSI in relation to the adequacy, accuracy, completeness or reasonableness of this publication. All and any such responsibility and liability is expressly disclaimed to the full extent permitted by the law.

This publication is provided as is, and is to be used at the recipient's own risk.

The recipient is advised to consider seeking professional guidance with respect to its use of this publication.

This publication is not intended to constitute a contract. Users are responsible for its correct application.

© The British Standards Institution 2021
Published by BSI Standards Limited 2021

ISBN 978 0 539 06666 1

ICS 65.060.10

Compliance with a British Standard cannot confer immunity from legal obligations.

This British Standard was published under the authority of the Standards Policy and Strategy Committee on 30 June 2021.

Amendments/corrigenda issued since publication

Date	Text affected

Documents
Document Sharing Hub

Full document details: BS ISO 12003-1:2021

INTERNATIONAL STANDARD

ISO 12003-1

Third edition
2021-06

Tractors for agriculture and forestry — Roll-over protective structures on narrow tractors —

Part 1: Front-mounted ROPS

Tracteurs agricoles et forestiers — Structures de protection contre le retournement (ROPS) pour tracteurs à voie étroite —

Partie 1: ROPS montées à l'avant

Reference number
ISO 12003-1:2021(E)

Documents
Document Sharing Hub

© ISO 2021

Full document details: BS ISO 12003-1:2021

COPYRIGHT PROTECTED DOCUMENT

© ISO 2021

All rights reserved. Unless otherwise specified, or required in the context of its implementation, no part of this publication may be reproduced or utilized otherwise in any form or by any means, electronic or mechanical, including photocopying, or posting on the internet or an intranet, without prior written permission. Permission can be requested from either ISO at the address below or ISO's member body in the country of the requester.

ISO copyright office
CP 401 • Ch. de Blandonnet 8
CH-1214 Vernier, Geneva
Phone: +41 22 749 01 11
Email: copyright@iso.org
Website: www.iso.org

Published in Switzerland

© ISO 2021 – All rights reserved

Documents
Document Sharing Hub

Full document details: BS ISO 12003-1:2021

Contents

Page

Foreword ... **v**
Introduction ... **vii**
1 Scope ... **1**
2 Normative references ... **1**
3 Terms and definitions ... **2**
4 Symbols ... **6**
5 Test apparatus and equipment ... **7**
5.1 Apparatus for both dynamic and static testing ... 7
5.1.1 Clearance zone framework ... 7
5.1.2 Apparatus for crushing tests ... 7
5.1.3 Rear hard fixture test rig ... 8
5.2 Apparatus for dynamic testing ... 9
5.2.1 Device to strike a blow against the front-mounted ROPS ... 9
5.2.2 Pendulum supports ... 10
5.2.3 Means of lashing the tractor to the ground ... 10
5.2.4 Wheel beam ... 11
5.2.5 Wheel prop ... 11
5.2.6 Props and lashings for articulated tractors ... 13
5.2.7 Tyre pressures and deflection ... 13
5.2.8 Device to measure elastic deflection ... 13
5.3 Apparatus for static testing ... 14
6 Preparation of tractor and ROPS for testing ... **15**
7 ROPS deflection preliminary tests ... **16**
7.1 General requirements ... 16
7.2 Lateral stability test ... 16
7.3 Non-continuous rolling test ... 17
7.3.1 General ... 17
7.3.2 Demonstration of non-continuous rolling behaviour by means of the overturning test ... 17
7.3.3 Demonstration of non-continuous rolling behaviour by calculation ... 18
8 ROPS deflection test procedures ... **18**
8.1 General requirements ... 18
8.2 Test methods ... 18
8.3 Test sequence ... 18
8.4 Rear fixture test procedure ... 19
8.5 Dynamic (impact) test procedures for front-mounted ROPS ... 19
8.5.1 Rear impact test procedure ... 19
8.5.2 Front impact test procedure ... 20
8.5.3 Side impact test procedure ... 21
8.5.4 Additional impact tests ... 22
8.6 Static test procedures for front-mounted ROPS ... 22
8.6.1 Test preparation ... 22
8.6.2 General requirements for horizontal loading test procedures ... 23
8.6.3 Rear loading ... 23
8.6.4 Front loading ... 23
8.6.5 Side loading ... 24
8.7 Vertical crushing test procedure ... 24
8.8 Additional vertical crushing tests ... 24
8.9 Observations during testing ... 24
8.9.1 Fractures and cracks ... 24
8.9.2 Clearance zone ... 24

© ISO 2021 – All rights reserved

AVA Documents
Document Sharing Hub
Full document details: BS ISO 12003-1:2021

8.9.3 Recording permanent deflection ... 25

9 Determination of seat index point (SIP), seat location and adjustment for test ... 25
9.1 General ... 25
9.2 Seat location and adjustment for tests ... 25

10 Clearance zone ... 25
10.1 General ... 25
10.2 Clearance zone for tractors with a non-reversible seat ... 25
10.3 Clearance zone for tractors with a reversible driving position ... 27
10.4 Optional seats ... 28

11 Tolerances ... 28

12 Acceptance conditions ... 29
12.1 General ... 29
12.2 Clearance zone ... 29
12.3 Seat anchorage performance ... 29
12.4 Folding ROPS performance ... 29
12.5 After impact loads ... 29
12.6 After static horizontal loads ... 30
12.7 Additional conditions ... 30
12.8 Cold weather embrittlement ... 33

13 Seatbelt anchorage test procedures ... 33

14 Folding ROPS ... 33

15 Labelling ... 34

16 Extension to other models ... 34
16.1 Administrative extension ... 34
16.2 Technical extension ... 34
16.2.1 General ... 34
16.2.2 Extension of the structural test results to other models of tractors ... 35
16.2.3 Extension of the structural test results to modified models of the protective structure ... 35
16.2.4 Type extension limits ... 35
16.2.5 Increase of the declared reference mass ... 36

17 Test report ... 36

Annex A (normative) **Requirements for providing resistance to brittle fracture of front-mounted ROPS at a reduced operation temperature ... 37**

Annex B (informative) **Folding ROPS test procedures ... 39**

Annex C (normative) **Test report for front-mounted ROPS ... 47**

Annex D (normative) **Non-continuous rolling test procedure — Calculation method ... 57**

Bibliography ... 61

© ISO 2021 – All rights reserved
Documents
Document Sharing Hub
Full document details: BS ISO 12003-1:2021

Foreword

ISO (the International Organization for Standardization) is a worldwide federation of national standards bodies (ISO member bodies). The work of preparing International Standards is normally carried out through ISO technical committees. Each member body interested in a subject for which a technical committee has been established has the right to be represented on that committee. International organizations, governmental and non-governmental, in liaison with ISO, also take part in the work. ISO collaborates closely with the International Electrotechnical Commission (IEC) on all matters of electrotechnical standardization.

The procedures used to develop this document and those intended for its further maintenance are described in the ISO/IEC Directives, Part 1. In particular, the different approval criteria needed for the different types of ISO documents should be noted. This document was drafted in accordance with the editorial rules of the ISO/IEC Directives, Part 2 (see www.iso.org/directives).

Attention is drawn to the possibility that some of the elements of this document may be the subject of patent rights. ISO shall not be held responsible for identifying any or all such patent rights. Details of any patent rights identified during the development of the document will be in the Introduction and/or on the ISO list of patent declarations received (see www.iso.org/patents).

Any trade name used in this document is information given for the convenience of users and does not constitute an endorsement.

For an explanation of the voluntary nature of standards, the meaning of ISO specific terms and expressions related to conformity assessment, as well as information about ISO's adherence to the World Trade Organization (WTO) principles in the Technical Barriers to Trade (TBT), see www.iso.org/iso/foreword.html.

This document was prepared by Technical Committee ISO/TC 23, *Tractors and machinery for agriculture and forestry,* Subcommittee SC 2, *Common tests*.

This third edition cancels and replaces the second edition (ISO 12003-1:2008), which has been technically revised.

The main changes compared to the previous edition are as follows:

— the main title has been changed, referencing type of tractor, from “Agricultural and forestry tractors” to “Tractors for agriculture and forestry”;

— seat anchorage test procedures of OECD in ISO 12003 have been added as optional testing;

— ergonomic folding ROPS test procedures of OECD in ISO 12003 have been added as optional testing;

— definitions for unballasted mass, plane, track width, maximum permissible mass have been added;

— tractor mass limits for unballasted tractor has been specified;

— permitted mass ratio has been specified (1,75);

— reference mass limits have been added;

— tractor lashings method of lashing has been changed;

— seat position during test has been updated to include seats with adjustable backrest;

— clearance zone has been updated for clarity and information for reversible seat has been added;

— Figure 17 has been updated to be harmonize with OECD Code 6; specifically, a new key “g” has been added to indicate failure at any stage when load drops below $0{,}8F_{max}$;

— cold weather embrittlement test has been added;

© ISO 2021 – All rights reserved

Documents
Document Sharing Hub
Full document details: BS ISO 12003-1:2021

— reversible seat operator seat zones and formulae have been updated to be harmonized with OECD Code 6;

— non-continuous rolling test methods has been added.

A list of all parts in the ISO 12003 series can be found on the ISO website.

Any feedback or questions on this document should be directed to the user's national standards body. A complete listing of these bodies can be found at www.iso.org/members.html.

© ISO 2021 – All rights reserved
Documents
Document Sharing Hub
Full document details: BS ISO 12003-1:2021

Introduction

Testing of roll-over protective structures (ROPS) for narrow tractors for agriculture and forestry intends to minimize the likelihood of driver injury resulting from accidental overturning during normal operation (e.g. field work) of the tractor. The strength of the front-mounted ROPS is tested by applying either static or dynamic (impact) loads to simulate actual loads which may be imposed on the front-mounted ROPS when the tractor overturns either to the rear or to the side without free fall. The tests allow observations to be made on the strength of the front-mounted ROPS and the attachment brackets to the tractor and also of the tractor parts that may be affected by the load imposed on the front-mounted ROPS. This document includes optional testing for seat anchorage points and folding efforts of front-mounted roll-over protective structure designed to fold.

Tests made using special rigs are intended to simulate such loads as are imposed on a protective structure, when the tractor overturns. These tests enable observations to be made on the strength of the protective structure and any brackets attaching it to the tractor and any parts of the tractor which transmit the test load.

Provision is made to cover both tractors with the conventional forward-facing driving position only and those with a reversible driving position, which is in agreement with the relevant OECD test code practice (see Reference [4]). For tractors with a reversible driving position, a clearance zone is defined to be the combined clearance zones for the two driving positions.

It is recognized that there can be designs of tractors, such as lawn-mowers, and certain forestry machines such as forwarders, for which this document is not appropriate.

NOTE For regular tractors, see ISO 3463[2] (dynamic test) and ISO 5700[3] (static test).

© ISO 2021 – All rights reserved

Documents
Document Sharing Hub
Full document details: BS ISO 12003-1:2021

Documents
Document Sharing Hub

Tractors for agriculture and forestry — Roll-over protective structures on narrow tractors —

Part 1: Front-mounted ROPS

1 Scope

This document specifies procedures for both the static and dynamic strength testing of roll-over protective structures (ROPS) front-mounted on narrow tractors. It defines the clearance zone and acceptance conditions for rigid or tiltable, front, two-post ROPS, including any associated rear fixtures, and is applicable to tractors so equipped having the following characteristics:

— a ground clearance of not more than 600 mm beneath the lowest points of the front- and rear-axle housings (not considering lower points on the axle differential);

— a fixed or adjustable minimum track width of one of the two axles of less than 1 150 mm;

NOTE It is understood that the axle mounted with the wider tyres is set at a track width of not more than 1 150 mm. Tyre track width is adjustable so that the outer edges of the narrower tyres do not extend beyond the outer edges of the tyres of the other axle. Where the two axles are fitted with rims and tyres of the same size, the fixed or adjustable track width of the two axles is less than 1 150 mm.

— a mass greater than 400 kg but less than 3 500 kg, unballasted, including the ROPS and tyres of the largest size recommended by the manufacturer;

— fitted with roll-over protective structures of the dual-pillar type mounted only in front of the seat index point (SIP) and characterised by a reduced clearance zone attributable to the tractor silhouette.

This document also specifies optional testing procedures for both seat anchorage points and folding efforts of front-mounted ROPS designed to fold.

2 Normative references

The following documents are referred to in the text in such a way that some or all of their content constitutes requirements of this document. For dated references, only the edition cited applies. For undated references, the latest edition of the referenced document (including any amendments) applies.

ISO 630-1, *Structural steels — Part 1: General technical delivery conditions for hot-rolled products*

ISO 630-2, *Structural steels — Part 2: Technical delivery conditions for structural steels for general purposes*

ISO 630-3, *Structural steels — Part 3: Technical delivery conditions for fine-grain structural steels*

ISO 630-4, *Structural steels — Part 4: Technical delivery conditions for high yield strength quenched and tempered structural steel plates and wide flats*

ISO 2408, *Steel wire ropes — Requirements*

ISO 3776-2, *Tractors and machinery for agriculture — Seat belts — Part 2: Anchorage strength requirements*

© ISO 2021 – All rights reserved

Documents
Document Sharing Hub
Full document details: BS ISO 12003-1:2021

ISO 5353, *Earth-moving machinery, and tractors and machinery for agriculture and forestry — Seat index point*

ISO 12934, *Tractors and machinery for agriculture and forestry — Basic types — Vocabulary*

ISO 13854:2017, *Safety of machinery — Minimum gaps to avoid crushing of parts of the human body*

ISO 80000-1, *Quantities and units — Part 1: General*

ASTM A370, *Standard Test Methods and Definitions for Mechanical Testing of Steel Products*

ASAE[1)] S313, *Soil Cone Penetrometer*

ASAE[1)] EP542, *Procedures for Using and Reporting Data Obtained with the Soil Cone Penetrometer*

3 Terms and definitions

For the purposes of this document, the terms and definitions given in ISO 12934 and the following apply.

ISO and IEC maintain terminological databases for use in standardization at the following addresses:

— ISO Online browsing platform: available at https://www.iso.org/obp

— IEC Electropedia: available at https://www.electropedia.org/

3.1
roll-over protective structure
ROPS
framework protecting drivers of agricultural tractors, which minimizes the likelihood of driver injury resulting from accidental overturning during normal field work

Note 1 to entry: The ROPS is characterized by the provision of space for a clearance zone, either inside the envelope of the structure or within a space bounded by a series of straight lines from the outer edges of the structure to any part of the tractor that might come into contact with the ground; it is capable of supporting the tractor in an overturned position.

3.2
front-mounted ROPS
two-post *roll-over protective structure* (3.1) mounted on the tractor in front of the driver and with a reduced clearance zone

Note 1 to entry: Compare with rear-mounted ROPS described in ISO 12003-2.

3.3
unballasted mass
mass of the tractor in working order with tanks and radiators full, *roll-over protective structure* (3.1) with cladding and any track equipment or additional front-wheel drive components required for normal use

Note 1 to entry: Not included are the operator, optional ballast weights, additional wheel equipment, special equipment and loads.

[SOURCE: ISO 5700:2013, 3.2]

3.4
maximum permissible mass
m_{max}
maximum mass of the tractor stated by the manufacturer to be technically permissible and declared on the vehicle's identification plate and/or in the operator's handbook

1) American Society of Agricultural Engineers, now known as American Society of Agricultural and Biological Engineers.

© ISO 2021 – All rights reserved
Documents
Document Sharing Hub
Full document details: BS ISO 12003-1:2021

3.5
reference mass
m_t
mass, not less than the maximum *unballasted mass* (3.3), selected by the manufacturer for calculation of loading energies and forces to be applied in the tests

3.6
mass ratio
m_r
ratio of

$$m_r = \frac{m_{max}}{m_t}$$

3.7
reference plane
vertical plane, generally longitudinal to the tractor and passing through the seat index point and the steering-wheel centre

Note 1 to entry: Normally, this reference plane coincides with the longitudinal median plane of the tractor.

3.8
longitudinal median plane
median longitudinal plane
symmetric longitudinal plane
vertical plane Y passing through the mid-points of AB, perpendicular to AB, A and B being such that

— for each wheel, the vertical plane passing through its axis cuts the mid-plane of the wheel following a straight line Δ which meets the supporting surface of the vehicle at one point, and

— A and B are two points thus defined which correspond to two wheels, both of which are either steering or powered wheels, situated respectively at the two ends of the same real or imaginary axle.

Note 1 to entry: The mid-plane of the dual wheels being equidistant from the inner edge of one wheel and the outer edge of the other, the straight line Δ is, in this particular case, the intersection of the mid-plane of the dual wheels and the vertical plane passing through the axis of the axle pin.

Note 2 to entry: Adapted from ISO 612:1978, Clause 5[1].

Note 3 to entry: The longitudinal median plane may also be applied to track-laying tractors.

Note 4 to entry: See Figure 1.

[SOURCE: ISO 5700:2013, 3.8]

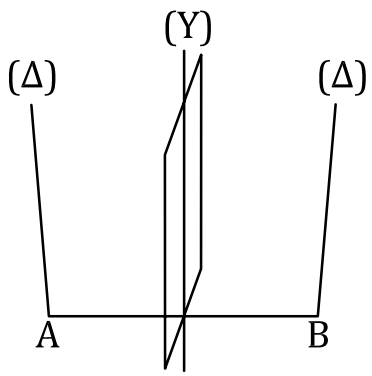

Figure 1 — Longitudinal median plane

© ISO 2021 – All rights reserved

Documents
Document Sharing Hub
Full document details: BS ISO 12003-1:2021

3.9
track
tread
distance at ground level between two vertical planes passing through the centreline of ground contact of the tires parallel to the *longitudinal median plane* (3.8) of the tractor with the wheels in the straight-ahead position

Note 1 to entry: In the case of dual wheels, it is the distance at ground level between two planes passing through the centreline of the dual wheels. In the case of track-laying tractors, it is the distance between the two vertical planes passing through the centreline of ground contact of the tracks.

Note 2 to entry: See Figure 2.

[SOURCE: ISO 789-13:2018, 3.3]

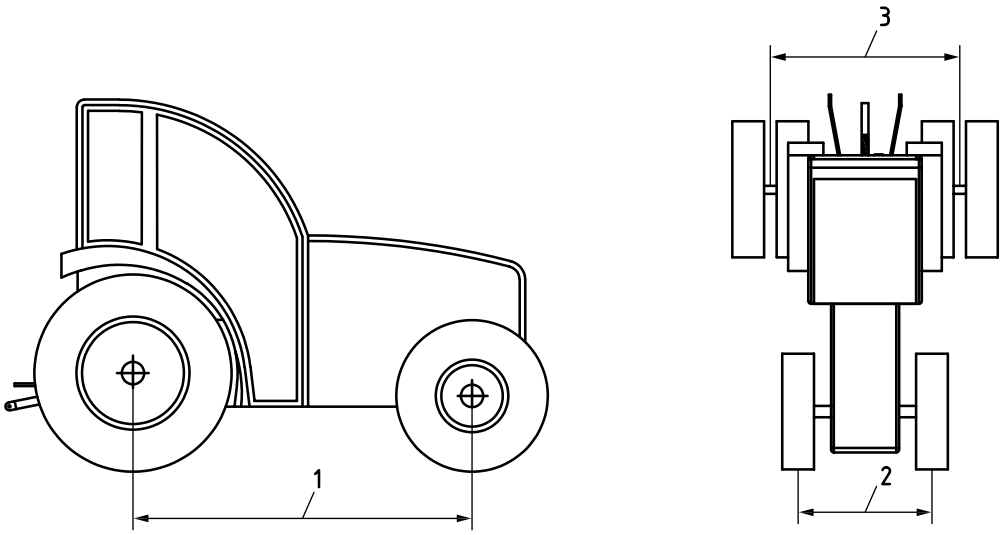

Key

1 wheel base
2 track
3 track (dual wheels)

Figure 2 — Track and wheelbase of wheeled tractor

3.10
wheelbase
distance at ground level between two vertical planes passing through the centres of the front wheels and the rear wheels with tractor and wheels in the same straight-ahead position

Note 1 to entry: See Figure 2.

[SOURCE: ISO 789-13:2018, 3.2]

3.11
rear fixture
component such as the rear tyre (measured at its specified smallest diameter), mudguard or other rigid tractor components, or all of these, or a supplementary fixture of requisite width, height and strength installed behind the driver's seat, which completes the *front-mounted ROPS'* (3.2) clearance zone for strength testing

3.12
horizontal loading test
application of a horizontal load to the rear, front and side of the *roll-over protective structure* (3.1)

© ISO 2021 – All rights reserved
Documents
Document Sharing Hub
Full document details: BS ISO 12003-1:2021

3.13
crushing test
application of a vertical static load through a beam placed laterally across the uppermost members of the *front-mounted ROPS* (3.2)

3.14
impact test
application of a dynamic load produced by a block acting as a pendulum

3.15
foldable ROPS
two-post *roll-over protective structure* (3.1) with hand raising/lowering directly managed by the operator (with or without partial assistance)

3.16
agricultural tractor
self-propelled agricultural vehicle having at least two axles and wheels, or endless tracks, particularly designed to pull agricultural trailers and pull, push, carry and operate implements used for agricultural work (including forestry work), which may be provided with a detachable loading platform

Note 1 to entry: The agricultural vehicle has a maximum design speed of not less than 6 km/h and may be equipped with one or more seats.

[SOURCE: ISO 12934:2013, 3.1]

3.17
hand-operated foldable ROPS
front mounted dual pillar protective structure with hand raising/lowering directly managed by the operator (with or without partial assistance)

3.18
automated foldable ROPS
front mounted dual pillar protective structure with full assisted raising/lowering operations

3.19
locking system
device fitted to lock, by hand or automatically, the ROPS in the raised or lowered positions

3.20
grasping area
portion of the ROPS and/or additional handle fitted to the ROPS where the operator is allowed to carry out the raising/lowering operations

3.21
accessible part of the grasping area
area where the ROPS is handled by the operator during the raising/lowering operations

Note 1 to entry: This area shall be defined with regard to the geometric center of cross sections of the grasping area.

3.22
accessible zone
volume where a standing operator can apply a force in order to raise/lower the ROPS

3.23
pinching
dangerous point where parts move in relation to each other or to fixed parts in such a way as may cause persons or certain parts of their bodies to be pinched

© ISO 2021 – All rights reserved

Documents
Document Sharing Hub
Full document details: BS ISO 12003-1:2021

3.24
shear
dangerous point where parts move along each other or along other parts in such a way as may cause persons or certain parts of their bodies to be pinched or shorn

3.25
static friction
force that resists initiation of movement of one surface sliding over another surface

Note 1 to entry: The force required to initiate movement is equal to that which resists initiation of movement.

[SOURCE: ISO 15359:1999, 3.2]

3.26
dynamic friction
force that resists maintained sliding of one surface over another surface

Note 1 to entry: The force required to maintain sliding is equal to that which resists the maintenance of sliding.

[SOURCE: ISO 15359:1999, 3.4, modified — The original term was "kinetic friction".]

4 Symbols

For the purposes of this document, the symbols in Table 1 apply.

Table 1 — Symbols

Symbol	Description	Unit
a	Ratio of permanent deflection to elastic deflection measured at the point of impact during the dynamic tests	mm/mm
a_h	Half of the horizontal seat adjustment	mm
a_v	Half of the vertical seat adjustment	mm
B	Minimum overall width of the tractor	mm
B_b	Maximum outer width of the front-mounted ROPS	mm
D	Deflection of the front-mounted ROPS at the point of impact (dynamic tests) or at the point of, and in line with, the load application (static test)	mm
D_p	Permanent deformation	mm
D_e	Elastic deformation	mm
D'	Deflection of calculated energy required	mm
E_i	Strain energy absorbed; area under *F-D* curve	J
E_{il}	Energy to be absorbed during horizontal loading	J
E_{is}	Energy to be absorbed during side loading	J
F	Static load force	N
F_i	Force applied to the rear fixture	N
F'	Loading force for the calculated energy required	N
F_{max}	Maximum static load force occurring during loading, with the exception of overload	N
F_v	Vertical crushing force	N
H	Falling height of the pendulum block	mm
I	Moment of inertia about rear axle, whatever the mass of the rear wheels may be	kg·m^2
L	Tractor reference wheelbase	mm
m	Tractor unballasted mass (see 3.3)	kg
m_t	Reference mass (see 3.5)	kg
NOTE See Annex D for characteristic tractor data symbols used in the calculation of non-continuous rolling.		

© ISO 2021 – All rights reserved
Documents
Document Sharing Hub
Full document details: BS ISO 12003-1:2021

Table 1 *(continued)*

Symbol	Description	Unit
m_{max}	Tractor maximum permissible mass	kg
m_r	Mass ratio of the maximum permissible mass (m_{max}) to the reference mass (m_t) (see 3.6)	Kg/kg
NOTE See Annex D for characteristic tractor data symbols used in the calculation of non-continuous rolling.		

5 Test apparatus and equipment

5.1 Apparatus for both dynamic and static testing

5.1.1 Clearance zone framework

Means to prove that the clearance zone has not been entered during the test: a measuring rig conforming with Figures 11 and 12 may be used.

5.1.2 Apparatus for crushing tests

The crushing tests shall be carried out by means of the elements described in 5.1.2.1 to 5.1.2.3.

5.1.2.1 Means to apply downward force on the front-mounted ROPS, such as that shown in Figure 3, including a stiff beam with a width of 250 mm.

5.1.2.2 Equipment to measure total vertical force applied.

© ISO 2021 – All rights reserved

Documents
Document Sharing Hub
Full document details: BS ISO 12003-1:2021

5.1.2.3 Suitable axle supports, so that the tractor tyres do not bear the crushing force.

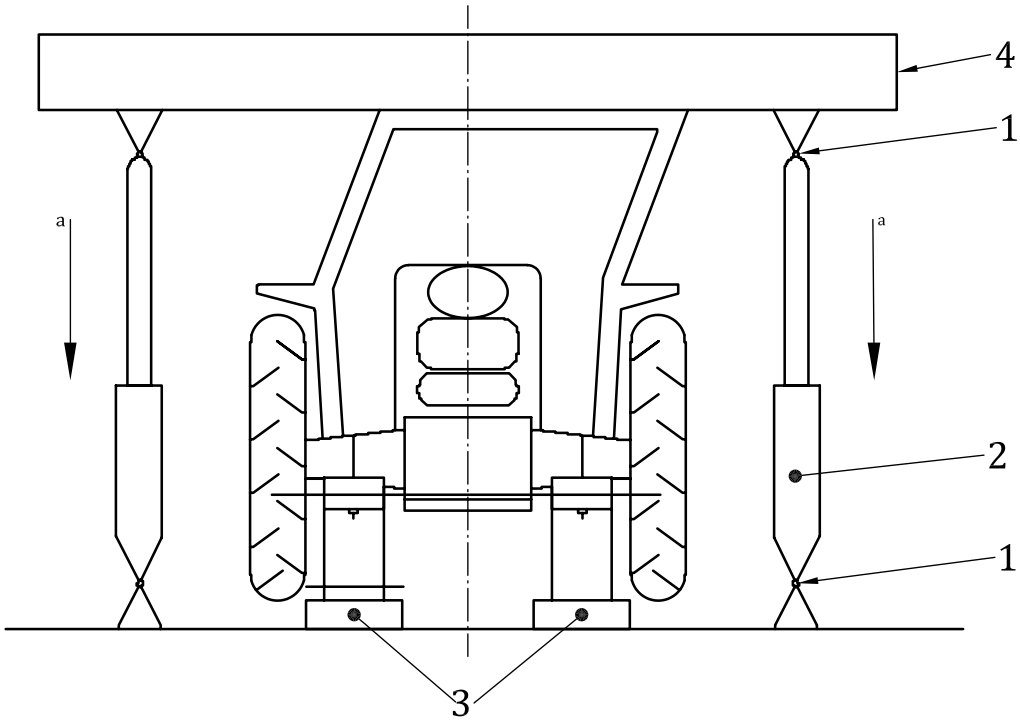

Key

1 universal pin joints
2 hydraulic cylinder
3 axle supports
4 stiff beam
a Direction of force.

Figure 3 — Crushing rig — Example

5.1.3 Rear hard fixture test rig

A rig to apply a force as shown in Figure 4.

© ISO 2021 – All rights reserved
Documents
Document Sharing Hub
Full document details: BS ISO 12003-1:2021

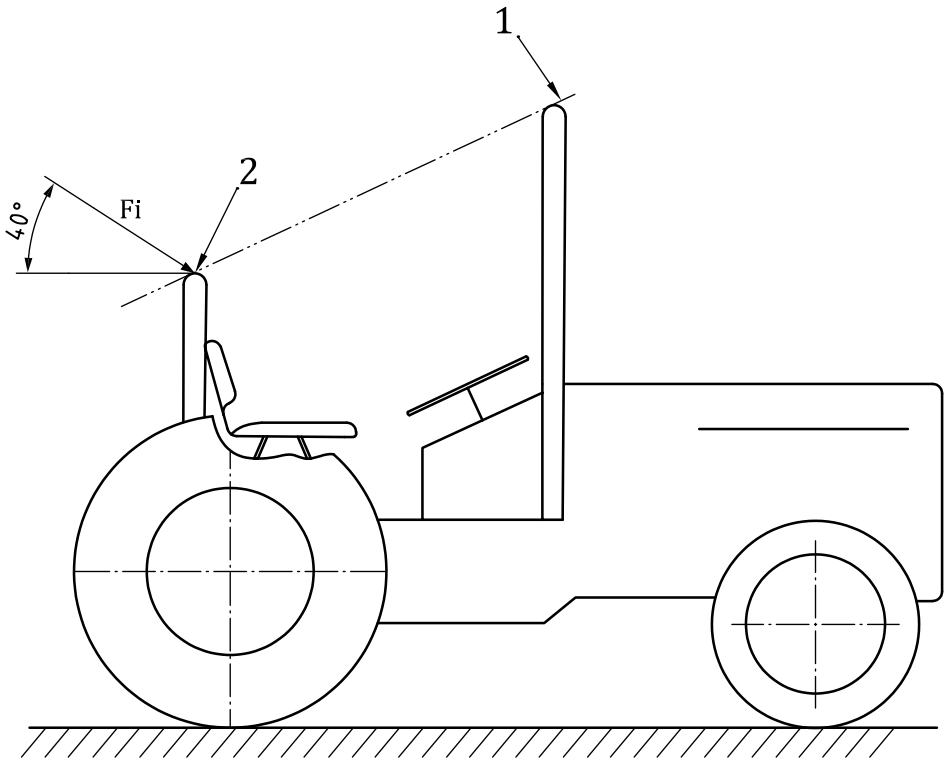

Key

1 simulated ground line

2 supplementary (rear) fixture

Figure 4 — Test force direction

5.2 Apparatus for dynamic testing

5.2.1 Device to strike a blow against the front-mounted ROPS

A pendulum block with a mass of 2 000 kg shall be used. The pendulum block mass does not include the mass of the chains or wire ropes. The maximum chain or wire rope mass shall be 100 kg. The block shall be suspended from two chains or wire ropes from pivot points 6 m or more above ground level as shown in Figure 5. The pendulum block centre of gravity shall be constant and coincide with its geometric centre. The pendulum block centre of gravity shall pass through the contact point of the protective structure. Means shall be provided for independently adjusting the height of the pendulum block and the angle between the pendulum block and the supporting chains or wire ropes.

The parallelepiped shall be connected to the system which pulls it backwards by an instantaneous release mechanism which is so designed and located as to enable the pendulum block to be released without causing the parallelepiped to oscillate about its horizontal axis perpendicular to the pendulum's plane of oscillation.

© ISO 2021 – All rights reserved

Documents
Document Sharing Hub
Full document details: BS ISO 12003-1:2021

Dimensions in millimetres

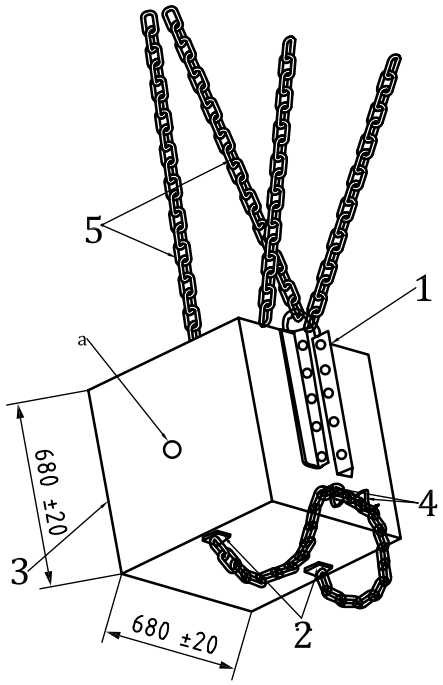

Key

1 attachment for release mechanism
2 height adjustment
3 impact face
4 hooks to hold spare chain
5 pendulum chains or wire ropes
a Axis of centre of gravity.

Figure 5 — Illustration of pendulum block

5.2.2 Pendulum supports

The pendulum pivot points shall be rigidly fixed such that their displacement in any direction does not exceed 1 % of the height of fall.

5.2.3 Means of lashing the tractor to the ground

5.2.3.1 Anchoring rails with the requisite track width and covering the necessary area for lashing the tractor shall be rigidly attached to a non-yielding base beneath the pendulum.

5.2.3.2 The tractor shall be lashed to the rails by means of steel cable of construction Class 6 x 19, Grade 1770, with nominal diameter 13 mm according to ISO 2408. There shall be two lashings on each axle, one on each side of the median plane of the tractor. The lashings shall be anchored in the area immediately below the pivot points and extending for approximately 9 m along the pendulum block axis and approximately 1 800 mm to either side. The points of attachment of the lashings shall be sufficiently long to have an angle of 30° between the ground and lashing. Details of the lashing means are given in Figures 6, 7 and 8.

The front and rear wheels are not required to be in line if this is more convenient for attaching appropriate ropes.

© ISO 2021 – All rights reserved
Documents
Document Sharing Hub
Full document details: BS ISO 12003-1:2021

5.2.4 Wheel beam

A softwood beam, of cross-section 150 mm × 150 mm, to restrain the rear wheels when striking from the front or rear, and to clamp against the side of the front and rear wheels when striking from the side, as shown in Figures 6, 7 and 8. It may be necessary to use two beams if the outer sides of the front and rear tyres are not in the same vertical plane.

5.2.5 Wheel prop

Prop to restrain the opposite rear wheel when striking from the side as shown in Figure 8. Its length shall be 20 to 25 times its thickness and its width 2 to 3 times its thickness. The prop shall then be placed against the rim of the most heavily loaded wheel opposite to the point of impact, pushed firmly against the rim and then fixed at its base.

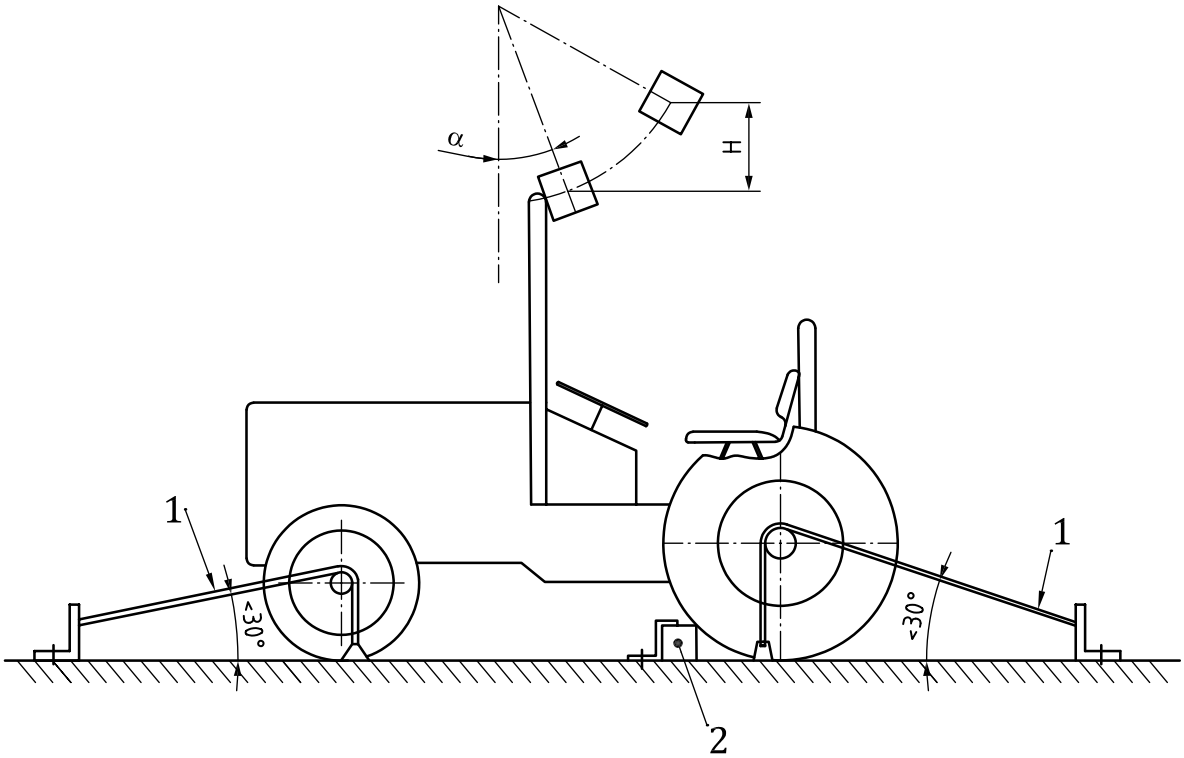

Key

1 lashing

2 wheel beam

H height of fall of pendulum block centre of gravity

$\alpha = m_t / 100$ with a 20° maximum

Figure 6 — Lashing for rear impact test — Example

© ISO 2021 – All rights reserved

Documents
Document Sharing Hub
Full document details: BS ISO 12003-1:2021

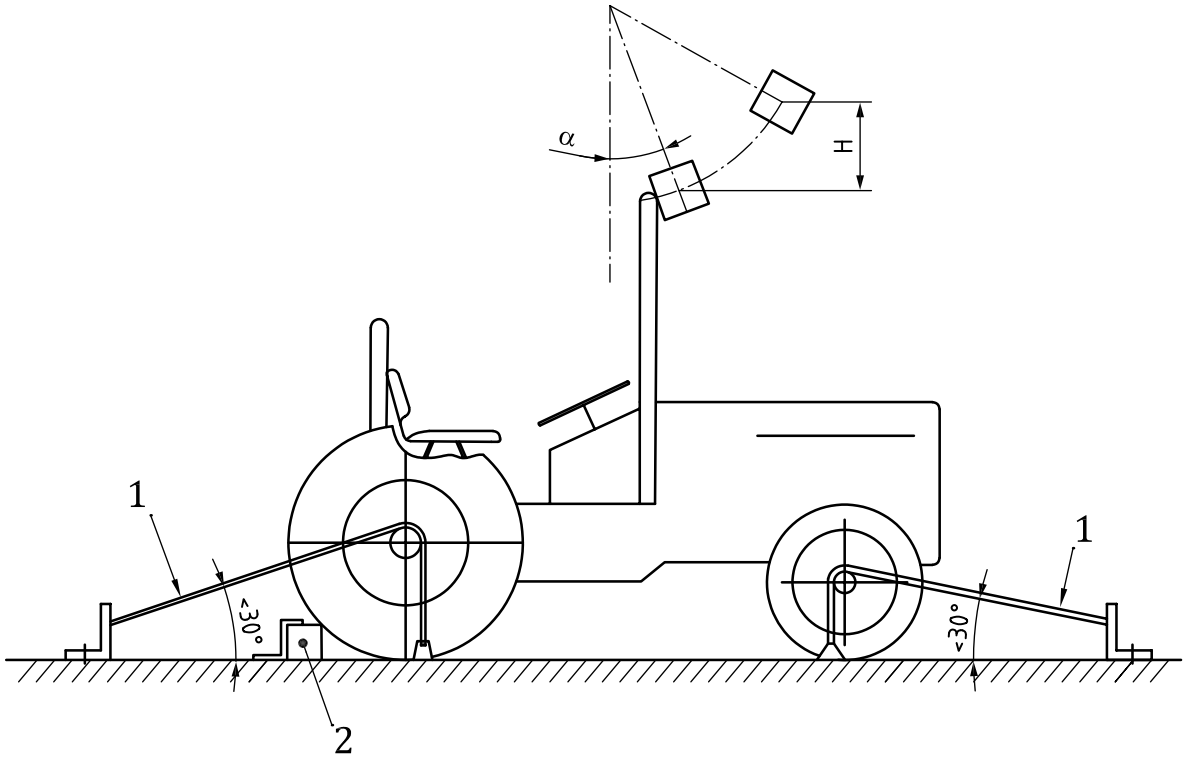

Key

1 lashing

2 wheel beam

H height of fall of pendulum block centre of gravity

$\alpha = m_t / 100$, maximum 20°

Figure 7 — Lashing for front impact test — Example

© ISO 2021 – All rights reserved

Documents
Document Sharing Hub
Full document details: BS ISO 12003-1:2021