BS ISO 12106:2017

BSI Standards Publication

Metallic materials — Fatigue testing — Axial-strain-controlled method

Documents
Document Sharing Hub

Full document details: BS ISO 12106:2017

National foreword

This British Standard is the UK implementation of ISO 12106:2017.

The UK participation in its preparation was entrusted to Technical Committee ISE/101/6, Fatigue testing of metals and metal matrix composites.

A list of organizations represented on this committee can be obtained on request to its secretary.

This publication does not purport to include all the necessary provisions of a contract. Users are responsible for its correct application.

© The British Standards Institution 2017.
Published by BSI Standards Limited 2017

ISBN 978 0 580 90261 1

ICS 77.040.10

Compliance with a British Standard cannot confer immunity from legal obligations.

This British Standard was published under the authority of the Standards Policy and Strategy Committee on 31 March 2017.

Amendments/corrigenda issued since publication

Date	Text affected

Documents
Document Sharing Hub

Full document details: BS ISO 12106:2017

INTERNATIONAL STANDARD

ISO 12106

Second edition
2017-03

Metallic materials — Fatigue testing — Axial-strain-controlled method

Matériaux métalliques — Essais de fatigue — Méthode par déformation axiale contrôlée

Reference number
ISO 12106:2017(E)

Documents
Document Sharing Hub

© ISO 2017

Full document details: BS ISO 12106:2017

COPYRIGHT PROTECTED DOCUMENT

© ISO 2017, Published in Switzerland

All rights reserved. Unless otherwise specified, no part of this publication may be reproduced or utilized otherwise in any form or by any means, electronic or mechanical, including photocopying, or posting on the internet or an intranet, without prior written permission. Permission can be requested from either ISO at the address below or ISO's member body in the country of the requester.

ISO copyright office
Ch. de Blandonnet 8 • CP 401
CH-1214 Vernier, Geneva, Switzerland
Tel. +41 22 749 01 11
Fax +41 22 749 09 47
copyright@iso.org
www.iso.org

© ISO 2017 – All rights reserved

Documents
Document Sharing Hub

Full document details: BS ISO 12106:2017

Contents

Page

Foreword ... **v**
Introduction ... **vi**
1 Scope ... **1**
2 Normative references ... **1**
3 Terms and definitions ... **1**
4 Symbols ... **3**
4.1 Specimens ... 3
4.2 Fatigue testing ... 3
4.2.1 Symbols ... 3
4.2.2 Subscripts ... 5
4.3 Expression of results ... 5
5 Apparatus ... **5**
5.1 Test machine ... 5
5.1.1 General ... 5
5.1.2 Force transducer ... 6
5.1.3 Gripping of specimen ... 6
5.1.4 Alignment check ... 6
5.2 Strain measurement ... 7
5.3 Heating device and temperature measurement ... 8
5.4 Instrumentation for test monitoring ... 8
5.4.1 Recording systems ... 8
5.4.2 Cycle counter ... 9
5.5 Checking and verification ... 9
6 Specimens ... **9**
6.1 Geometry ... 9
6.1.1 Round bars ... 9
6.1.2 Flat sheet products ... 10
6.2 Preparation of specimens ... 14
6.2.1 General ... 14
6.2.2 Machining procedure ... 14
6.2.3 Sampling and marking ... 15
6.2.4 Surface condition of specimen ... 15
6.2.5 Dimensional check ... 16
6.2.6 Storage and handling ... 16
7 Procedure ... **16**
7.1 Laboratory environment ... 16
7.2 Test machine control ... 16
7.3 Mounting of the specimen ... 17
7.4 Cycle shape — Strain rate or frequency of cycling ... 17
7.5 Start of test ... 18
7.5.1 Preliminary measurements ... 18
7.5.2 Test commencement ... 19
7.6 Number of specimens ... 19
7.7 Data recording ... 19
7.7.1 Stress-strain hysteresis loops ... 19
7.7.2 Data acquisition ... 19
7.8 End of test ... 20
7.9 Failure criteria ... 20
8 High-temperature strain-controlled creep-fatigue testing ... **22**
9 Expression of results ... **23**
9.1 Basic data (recorded data (see 7.7)) ... 23

AVA Documents
Document Sharing Hub

© ISO 2017 – All rights reserved

Full document details: BS ISO 12106:2017

9.2 Analysis of low-cycle fatigue results at $R_e = -1$ ... 23
9.2.1 Distinction between different types of strain values ... 23
9.2.2 Determination of fatigue life (see 7.9) ... 24
9.2.3 Stress-strain and strain-fatigue life relationships ... 24
9.3 Analysis of creep-fatigue results ... 25

10 Test report ... 25
10.1 General ... 25
10.2 Purpose of the test ... 26
10.3 Material ... 26
10.4 Specimen ... 26
10.5 Test methods ... 26
10.6 Test conditions ... 27
10.7 Presentation of results ... 27
10.7.1 Presentation of single test results ... 27
10.7.2 Presentation of results of test series ... 28
10.8 Values to be stored in a low-cycle fatigue database ... 29

Annex A (informative) **Measurement uncertainty ... 31**

Annex B (informative) **Examples of graphical presentation of results ... 33**

Bibliography ... 37

© ISO 2017 – All rights reserved

Documents
Document Sharing Hub
Full document details: BS ISO 12106:2017

Foreword

ISO (the International Organization for Standardization) is a worldwide federation of national standards bodies (ISO member bodies). The work of preparing International Standards is normally carried out through ISO technical committees. Each member body interested in a subject for which a technical committee has been established has the right to be represented on that committee. International organizations, governmental and non-governmental, in liaison with ISO, also take part in the work. ISO collaborates closely with the International Electrotechnical Commission (IEC) on all matters of electrotechnical standardization.

The procedures used to develop this document and those intended for its further maintenance are described in the ISO/IEC Directives, Part 1. In particular the different approval criteria needed for the different types of ISO documents should be noted. This document was drafted in accordance with the editorial rules of the ISO/IEC Directives, Part 2 (see www.iso.org/directives).

Attention is drawn to the possibility that some of the elements of this document may be the subject of patent rights. ISO shall not be held responsible for identifying any or all such patent rights. Details of any patent rights identified during the development of the document will be in the Introduction and/or on the ISO list of patent declarations received (see www.iso.org/patents).

Any trade name used in this document is information given for the convenience of users and does not constitute an endorsement.

For an explanation on the voluntary nature of standards, the meaning of ISO specific terms and expressions related to conformity assessment, as well as information about ISO's adherence to the World Trade Organization (WTO) principles in the Technical Barriers to Trade (TBT) see the following URL: www.iso.org/iso/foreword.html.

This document was prepared by Technical Committee ISO/TC 164, *Mechanical testing of metals*, Subcommittee SC 5, *Fatigue testing*.

This second edition cancels and replaces the first edition (ISO 12106:2003), which has been technically revised.

© ISO 2017 – All rights reserved

Documents
Document Sharing Hub
Full document details: BS ISO 12106:2017

Introduction

Materials and their microstructure may change when subjected to cyclic deformations and their mechanical properties can be significantly altered when compared with that resultant from monotonic deformations, for example, uniaxial stress-strain response. The design of mechanical components subjected to fatigue loadings and cyclic deformations requires, in a number of industrial sectors (i.e. nuclear, aerospace, ground vehicles, medical devices, etc.), knowledge of the cyclic behaviour of the materials under reversed strain control conditions, referred to as low-cycle fatigue, when cyclic plasticity is present.

In order to ensure reliability and consistency of results from different laboratories, it is necessary to collect all data using test methodologies that comply with a number of key points.

This document concerns both the generation of such strain-controlled fatigue data at room or elevated temperatures at fixed R-ratios (strain) and the presentation of results for fatigue properties, strain-life behaviour and cyclic stress-strain responses of metallic materials determined at an R_e-ratio = −1. Since there is a close relationship with strain-controlled, high-temperature testing, there is also a section devoted to creep-fatigue testing methodology.

This document does not address safety or health concerns, should such issues exist, that may be associated with its use or application. The user of this document has the sole responsibility to establish any appropriate safety and health concerns, as well as to determine the applicability of any national or local regulatory limitations regarding the use of this document.

© ISO 2017 – All rights reserved
Documents
Document Sharing Hub
Full document details: BS ISO 12106:2017

INTERNATIONAL STANDARD ISO 12106:2017(E)

Metallic materials — Fatigue testing — Axial-strain-controlled method

1 Scope

This document specifies a method of testing uniaxially deformed specimens under strain control at constant amplitude, uniform temperature and fixed strain ratios including at R_e = −1 for the determination of fatigue properties. It can also be used as a guide for testing under other *R*-ratios, as well as elevated temperatures where creep deformation effects may be active.

2 Normative references

The following documents are referred to in the text in such a way that some or all of their content constitutes requirements of this document. For dated references, only the edition cited applies. For undated references, the latest edition of the referenced document (including any amendments) applies.

ISO 7500-1, *Metallic materials — Calibration and verification of static uniaxial testing machines — Part 1: Tension/compression testing machines — Calibration and verification of the force-measuring system*

ISO 9513, *Metallic materials — Calibration of extensometer systems used in uniaxial testing*

ISO 23788, *Metallic materials — Verification of the alignment of fatigue testing machines*

3 Terms and definitions

For the purposes of this document, the following terms and definitions apply.

ISO and IEC maintain terminological databases for use in standardization at the following addresses:

— IEC Electropedia: available at http://www.electropedia.org/

— ISO Online browsing platform: available at http://www.iso.org/obp

3.1
engineering stress
instantaneous force divided by the initial cross-sectional area of the gauge length

$$S = F / A_0$$

3.2
true stress
instantaneous force divided by the instantaneous cross-sectional area of the gauge length

$$\sigma = F / A$$

Note 1 to entry: At strains to approximately 10 %, the true stress is approximated by the engineering stress, F/A_0. It is also important to note that at strains to approximately 10 %, it is the engineering strain that is actually measured by the extensometer and it is the controlled parameter in a test.

3.3
initial length
gauge length
L_0
initial length between extensometer measurement points at test temperature

© ISO 2017 – All rights reserved

Documents
Document Sharing Hub
Full document details: BS ISO 12106:2017

3.4
parallel length
L_p
length between transition radii of the test specimen

3.5
strain
engineering strain

$$e = \frac{\Delta L}{L_o} = \frac{L_i - L_o}{L_o}$$

true total strain

$$\varepsilon = \int_{L_o}^{L_i} \frac{dL}{L}$$

where

L_i is the instantaneous length of the gauge section;

L_o is the initial or gauge length.

Note 1 to entry: At true strain values to approximately 10 %, ε is approximated by the engineering strain $e = \Delta L/L$. It is also important to note that at strains to approximately 10%, it is the engineering strain that is the quantity measured by the extensometer and the controlled parameter in a strain-controlled fatigue test.

3.6
cycle
smallest segment of the strain-time function that is repeated periodically

3.7
maximum
greatest algebraic value of a variable within one cycle

3.8
minimum
least algebraic value of a variable within one cycle

3.9
mean
one-half of the algebraic sum of the maximum and minimum values of a variable

3.10
range
algebraic difference between the maximum and minimum values of a variable

3.11
amplitude
half the range of a variable

3.12
fatigue life
N_f
number of cycles that have to be applied to achieve a failure

Note 1 to entry: Failure criteria are defined, for example, in 7.8. The failure criterion used shall be reported with the results and be consistent through a series of fatigue tests.

© ISO 2017 – All rights reserved
Documents
Document Sharing Hub
Full document details: BS ISO 12106:2017

3.13
hysteresis loop
closed curve of the stress-strain response during one complete cycle

Note 1 to entry: It is quite common that the beginning few hysteresis loops in a test sequence may not be completely "closed" due to cyclic softening, cyclic hardening, cyclic stress relaxation, stress "shakedown", or ratchetting.

4 Symbols

For the purposes of this document, the symbols defined in 4.1 to 4.3 apply.

4.1 Specimens

See Table 1.

Table 1 — Symbols and designations concerning specimens

Specimen	Symbol	Designation	Unit
	L_o	Initial or gauge length	mm
	L_i	Instantaneous gauge length	mm
	A_o	Initial area of gauge section	mm^2
	A	Instantaneous area of gauge section with $AL = A_oL_o$	mm^2
	A_f	Minimum area at failure	mm^2
	r	Transition radius (from parallel length into the grip end of the test specimen)	mm
	L_z	Overall length of specimen	mm
Cylindrical			
	d	Diameter of cylindrical gauge section	mm
	D	Diameter of grip end of specimen	mm
Flat-sheet			
	t	Thickness	mm
	W	Width of grip end	mm
	w	Width of gauge section	mm

4.2 Fatigue testing

4.2.1 Symbols

Table 2 — Symbols and designations for variables and properties

Symbol	Definition	Units
E	Modulus of Elasticity mean value of the slope of the initial linear portion of a stress-strain curve	Gigapascals (GPa)
E_T	unloading modulus following a maximum stress (see Figure 1),	Gigapascals (GPa)
E_C	unloading modulus following a minimum stress (see Figure 1)	Gigapascals (GPa)
N_f	number of cycles to failure	

© ISO 2017 – All rights reserved

Documents
Document Sharing Hub
Full document details: BS ISO 12106:2017

Table 2 *(continued)*

Symbol	Definition	Units
t_f	time to failure; $t_f = T \cdot N_f$ in which T is the period of the signal (duration of the wavelength)	Seconds (s)
σ	true stress	Megapascals (MPa)
S	engineering stress	Megapascals (MPa)
e	engineering strain	
$\dot{e} = \frac{de}{dt}$	strain rate	Seconds to the power of minus one (s^{-1}) where t = time
ε	true strain	
Δ	range of a variable	
R_z	mean surface roughness	Micrometres (µm)
R_e	strain ratio $= (e_{min}/e_{max})$	

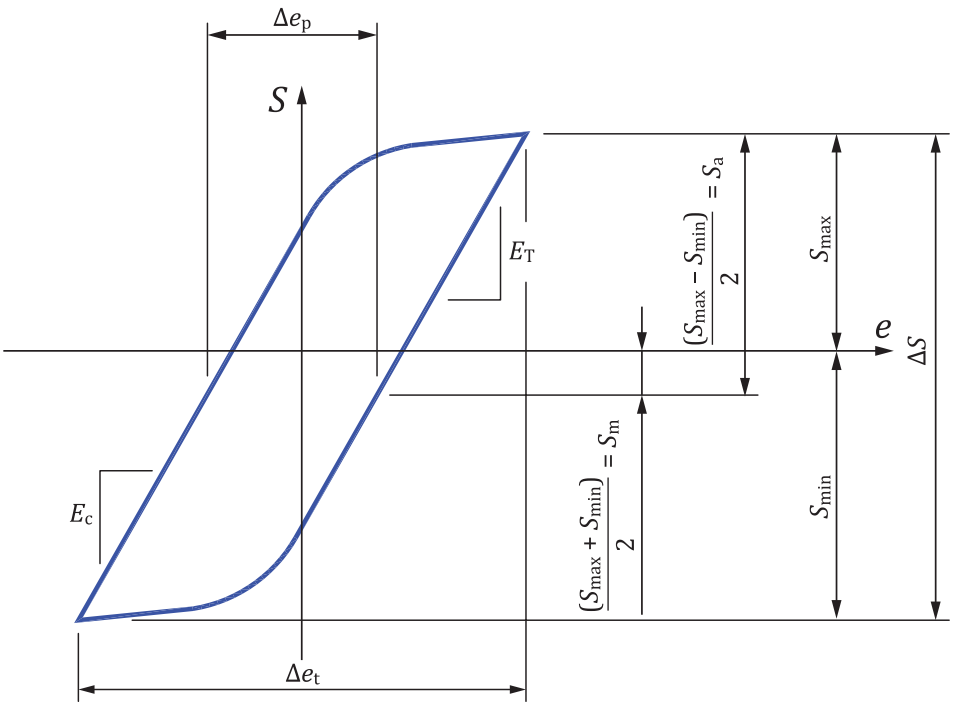

Figure 1 — Stress-strain hysteresis loop at $R_e = -1$

NOTE For the purpose of defining plastic strain from a stabilized stress-strain hysteresis loop, it is that non-recoverable strain at the mean stress established by $(S_{max} + S_{min})/2$ for the steady-state stress response in a controlled strain test. Frequently, it is the width of the hysteresis loop at zero stress crossing but it may not be in some metals.

© ISO 2017 – All rights reserved
Documents
Document Sharing Hub
Full document details: BS ISO 12106:2017

4.2.2 Subscripts

Table 3 — Subscripts and meaning

Subscript	Meaning
t	total
p	plastic
e	elastic
a	amplitude
m	mean
min	minimum
max	maximum

4.3 Expression of results

See Table 4.

Table 4 — Symbols and designations concerning the expression of fatigue properties for R_e = –1 tests

Symbol	Designation	Unit
$\sigma_{y'}$	Cyclic yield strength[a]	MPa
n	Monotonic strain hardening exponent	—
n'	Cyclic strain hardening exponent	—
K	Monotonic strength coefficient	MPa
K'	Cyclic strength coefficient	MPa
$\sigma_{f'}$	Fatigue strength coefficient	MPa
b	Fatigue strength exponent	—
$\varepsilon_{f'}$	Fatigue ductility coefficient	—
c	Fatigue ductility exponent	—

[a] 0,2 % offset is typically used.

5 Apparatus

5.1 Test machine

5.1.1 General

The tests shall be conducted on a uniaxial tension-compression machine designed for smooth start-up with no backlash when passing through zero stress. The machine shall be capable of controlling strain and measuring force when applying the recommended waveform. It should be axially stiff and well aligned. The complete machine-loading system, including force transducer and grips, should have sufficient lateral stiffness to avoid specimen buckling at the extremes of compressive stress.

NOTE See ISO 23788:2012, Annex C for a methodology for determination of lateral stiffness of a test machine.

© ISO 2017 – All rights reserved

Documents
Document Sharing Hub
Full document details: BS ISO 12106:2017

5.1.2 Force transducer

The force transducer shall be designed for tensile-compressive fatigue tests and should have high axial and lateral stiffness. Its capacity shall be suitable for the forces applied during the test. The force transducer shall conform to ISO 7500-1:2015, Class 1.

The indicated force as recorded at the output from a computer in an automated system or from the final output recording device in any non-automated system shall be within the specified permissible variation from the actual force. The force transducer capacity shall be sufficient to cover the range of *dynamic* forces measured during a test. The force measuring system shall comply with ISO 7500-1:2015, Class 1.

The force transducer shall be temperature-compensated with temperature coefficient of zero and span shall be no greater than 0,002 % of full scale per degree Celsius. Further, temperature gradients in the force transducer should be avoided.

During high-temperature or cryogenic testing, suitable shielding/compensation may be provided for the cell so it is maintained within its compensation range.

5.1.3 Gripping of specimen

The gripping device shall transmit the cyclic forces to the specimen without backlash along it is longitudinal axis. The overall load-string length should be minimized to avoid any tendency of the specimen to buckle. The geometric qualities of the device shall ensure correct alignment in order to meet the requirements specified in 5.1.4; it is therefore necessary to limit the number of components of which these gripping devices are composed and reduce the number of mechanical interfaces to a minimum.

The gripping device shall ensure the manner in which the specimen is mounted is reproducible. It shall have geometric features assuring the proper alignment of the specimen and preloaded surfaces allowing transmission of tensile and compressive forces without backlash throughout the duration of the test. Materials shall be selected so as to ensure correct functioning across the test temperature range.

5.1.4 Alignment check

Bending in a test machine due to misalignment in rigid-grip systems is generally caused by angular or lateral offsets of the grips or a combination of both (see Figure 2).

The test machine alignment shall be checked before each series of tests and any time a change is made to the load train in accordance with ISO 23788. The machine alignment shall be maximum of Class 5 according to ISO 23788.

© ISO 2017 – All rights reserved
Documents
Document Sharing Hub
Full document details: BS ISO 12106:2017

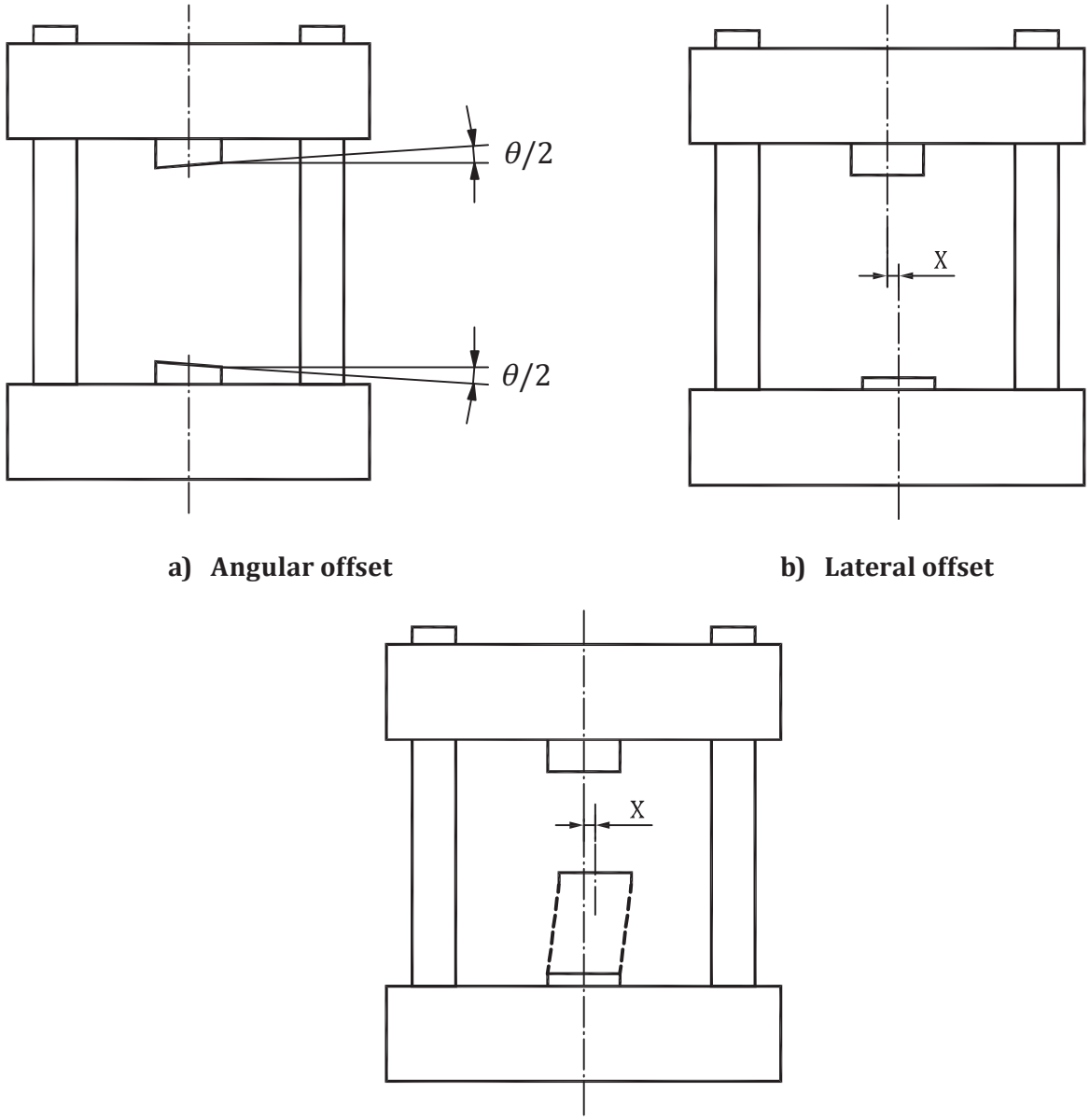

a) Angular offset

b) Lateral offset

c) Load-train offset in a non-rigid system

Figure 2 — Bending mechanisms due to misalignment in fatigue test systems

In a proper test machine/gripping procedure alignment procedure, it is the principles that are important since they shall:

— Ensure axial alignment of specimen and push/pull rods.

— Ensure mating faces of specimen and push/pull rods are parallel and square to the axis of symmetry.

— Ensure that the lateral stiffness of the load string and frame is sufficiently great enough to maintain axially when the specimen gauge length has become plastic (tangent modulus tending to zero).

5.2 Strain measurement

The strain shall be measured from the specimen using an axial extensometer.

© ISO 2017 – All rights reserved

Documents
Document Sharing Hub
Full document details: BS ISO 12106:2017