BS ISO 12108:2012

BSI Standards Publication

Metallic materials — Fatigue testing — Fatigue crack growth method

bsi.

...making excellence a habit.™

Document Sharing Hub

National foreword

This British Standard is the UK implementation of ISO 12108:2012. It supersedes BS ISO 12108:2002, which is withdrawn.

The UK participation in its preparation was entrusted to Technical Committee ISE/101/6, Fatigue testing of metals and metal matrix composites.

A list of organizations represented on this committee can be obtained on request to its secretary.

This publication does not purport to include all the necessary provisions of a contract. Users are responsible for its correct application.

© The British Standards Institution 2012
Published by BSI Standards Limited 2012

ISBN 978 0 580 66453 3

ICS 77.040.10

Compliance with a British Standard cannot confer immunity from legal obligations.

This British Standard was published under the authority of the Standards Policy and Strategy Committee on 31 August 2012.

Amendments issued since publication

Date	Text affected

Documents
Document Sharing Hub

Full document details: BS ISO 12108:2012

INTERNATIONAL STANDARD

ISO 12108

Second edition
2012-08-15

Metallic materials — Fatigue testing — Fatigue crack growth method

Matériaux métalliques — Essais de fatigue — Méthode d'essai de propagation de fissure en fatigue

Reference number
ISO 12108:2012(E)

Documents
Document Sharing Hub

© ISO 2012

Full document details: BS ISO 12108:2012

COPYRIGHT PROTECTED DOCUMENT

© ISO 2012

All rights reserved. Unless otherwise specified, no part of this publication may be reproduced or utilized in any form or by any means, electronic or mechanical, including photocopying and microfilm, without permission in writing from either ISO at the address below or ISO's member body in the country of the requester.

ISO copyright office
Case postale 56 • CH-1211 Geneva 20
Tel. + 41 22 749 01 11
Fax + 41 22 749 09 47
E-mail copyright@iso.org
Web www.iso.org

Published in Switzerland

© ISO 2012 – All rights reserved

Documents
Document Sharing Hub

Full document details: BS ISO 12108:2012

Contents

Page

Foreword ... v

Introduction ... vi

1 Scope ... 1

2 Normative references ... 1

3 Terms and definitions ... 1

4 Symbols and abbreviated terms ... 3
4.1 Symbols ... 3
4.2 Abbreviated terms for specimen identification ... 4

5 Apparatus ... 5
5.1 Testing machine ... 5
5.2 Cycle-counter ... 5
5.3 Grips and fixtures for CT specimens ... 5
5.4 Grips and fixtures for CCT/SENT specimens ... 7
5.5 Grips and fixtures for the SENB specimens ... 11
5.6 Crack length measurement apparatus ... 11

6 Specimens ... 12
6.1 General ... 12
6.2 Crack plane orientation ... 16
6.3 Starter notch precracking details ... 18
6.4 Stress-intensity factor ... 20
6.5 Specimen size ... 21
6.6 Specimen thickness ... 22
6.7 Residual stresses ... 23

7 Procedure ... 23
7.1 Fatigue precracking ... 23
7.2 Crack length measurement ... 23
7.3 Constant-force-amplitude, K-increasing, test procedure for $\mathrm{d}a/\mathrm{d}N > 10^{-5}$ mm/cycle ... 24
7.4 K-decreasing procedure for $\mathrm{d}a/\mathrm{d}N < 10^{-5}$ mm/cycle ... 25

8 Crack length measurement ... 27
8.1 Resolution ... 27
8.2 Interruption ... 27
8.3 Static force ... 27
8.4 Measurement interval ... 27
8.5 Symmetry ... 28
8.6 Out-of-plane cracking ... 28
8.7 Crack tip bifurcation ... 28

9 Calculations ... 28
9.1 Crack-front curvature ... 28
9.2 Determining the fatigue crack growth rate ... 28
9.3 Determination of the fatigue crack growth threshold ... 29

10 Test report ... 29
10.1 General ... 29
10.2 Material ... 29
10.3 Test specimen ... 30
10.4 Precracking terminal values ... 30
10.5 Test conditions ... 30
10.6 Test analysis ... 31
10.7 Presentation of results ... 31

Annex A (informative) **Non-visual crack length measurement methodology — Electric potential difference** [18] [24] [33] ... 38

AVA Documents
Document Sharing Hub

© ISO 2012 – All rights reserved

Full document details: BS ISO 12108:2012

Bibliography **41**

© ISO 2012 – All rights reserved
Documents
Document Sharing Hub
Full document details: BS ISO 12108:2012

Foreword

ISO (the International Organization for Standardization) is a worldwide federation of national standards bodies (ISO member bodies). The work of preparing International Standards is normally carried out through ISO technical committees. Each member body interested in a subject for which a technical committee has been established has the right to be represented on that committee. International organizations, governmental and non-governmental, in liaison with ISO, also take part in the work. ISO collaborates closely with the International Electrotechnical Commission (IEC) on all matters of electrotechnical standardization.

International Standards are drafted in accordance with the rules given in the ISO/IEC Directives, Part 2.

The main task of technical committees is to prepare International Standards. Draft International Standards adopted by the technical committees are circulated to the member bodies for voting. Publication as an International Standard requires approval by at least 75 % of the member bodies casting a vote.

Attention is drawn to the possibility that some of the elements of this document may be the subject of patent rights. ISO shall not be held responsible for identifying any or all such patent rights.

ISO 12108 was prepared by Technical Committee ISO/TC 164, *Mechanical testing of metals*, Subcommittee SC 5, *Fatigue testing*.

This second edition cancels and replaces the first edition (ISO 12108:2002), which has been technically revised.

© ISO 2012 – All rights reserved

Documents
Document Sharing Hub
Full document details: BS ISO 12108:2012

Introduction

This International Standard is intended to provide specifications for generation of fatigue crack growth rate data. Test results are expressed in terms of the fatigue crack growth rate as a function of crack-tip stress-intensity factor range, ΔK, as defined by the theory of linear elastic fracture mechanics [1]-[6]. Expressed in these terms the results characterize a material's resistance to subcritical crack extension under cyclic force test conditions. This resistance is independent of specimen planar geometry and thickness, within the limitations specified in Clause 6. All values are given in SI units [7].

This International Standard describes a method of subjecting a precracked notched specimen to a cyclic force. The crack length, a, is measured as a function of the number of elapsed force cycles, N. From the collected crack length and corresponding force cycles relationship the fatigue crack growth rate, $\mathrm{d}a/\mathrm{d}N$, is determined and is expressed as a function of stress-intensity factor range, ΔK.

Materials that can be tested by this method are limited by size, thickness and strength only to the extent that the material must remain predominantly in an elastic condition during testing and that buckling is precluded.

Specimen size may vary over a wide range. Proportional planar dimensions for six standard configurations are presented. The choice of a particular specimen configuration may be dictated by the actual component geometry, compression test conditions or suitability for a particular test environment.

Specimen size is a variable that is subjective to the test material's 0,2 % proof strength and the maximum stress-intensity factor applied during test. Specimen thickness may vary independent of the planar size, within defined limits, so long as large-scale yielding is precluded and out-of-plane distortion or buckling is not encountered. Any alternate specimen configuration other than those included in this International Standard may be used, provided there exists an established stress-intensity factor calibration expression, i.e. stress-intensity factor geometry function, $g\,(a/W)$. [9]-[11]

Residual stresses[12],[13], crack closure[14],[15], specimen thickness, cyclic waveform, frequency and environment, including temperature, may markedly affect the fatigue crack growth data but are in no way reflected in the computation of ΔK, and so should be recognized in the interpretation of the test results and be included as part of the test report. All other demarcations from this method should be noted as exceptions to this practice in the final report.

For crack growth rates above 10^{-5} mm/cycle, the typical scatter in test results generated in a single laboratory for a given ΔK can be in the order of a factor of two[16]. For crack growth rates below 10^{-5} mm/cycle, the scatter in the $\mathrm{d}a/\mathrm{d}N$ calculation may increase to a factor of 5 or more. To ensure the correct description of the material's $\mathrm{d}a/\mathrm{d}N$ versus ΔK behaviour, a replicate test conducted with the same test parameters is highly recommended.

Service conditions may exist where varying ΔK under conditions of constant K_{max} or K_{mean} control [17] may be more representative than data generated under conditions of constant force ratio; however, these alternate test procedures are beyond the scope of this International Standard.

© ISO 2012 – All rights reserved
Documents
Document Sharing Hub
Full document details: BS ISO 12108:2012

INTERNATIONAL STANDARD ISO 12108:2012(E)

Metallic materials — Fatigue testing — Fatigue crack growth method

1 Scope

This International Standard describes tests for determining the fatigue crack growth rate from the fatigue crack growth threshold stress-intensity factor range, ΔK_{th}, to the onset of rapid, unstable fracture.

This International Standard is primarily intended for use in evaluating isotropic metallic materials under predominantly linear-elastic stress conditions and with force applied only perpendicular to the crack plane (mode I stress condition), and with a constant stress ratio, R.

2 Normative references

The following normative referenced documents are indispensable for the application of this document. For dated references, only the edition cited applies. For undated references, the latest edition of the referenced document (including any amendments) applies.

ISO 4965-1, *Metallic materials — Dynamic force calibration for uniaxial fatigue testing — Part 1: Testing systems*

3 Terms and definitions

For the purposes of this document, the following terms and definitions apply.

3.1
crack length
a
linear measure of a principal planar dimension of a crack from a reference plane to the crack tip

NOTE This is also called crack size.

3.2
cycle
N
smallest segment of a force-time or stress-time function which is repeated periodically

NOTE The terms “fatigue cycle”, “force cycle” and “stress cycle” are used interchangeably. The letter N is used to represent the number of elapsed force cycles.

3.3
fatigue crack growth rate
$\mathrm{d}a/\mathrm{d}N$
extension in crack length

3.4
maximum force
F_{max}
force having the highest algebraic value in the cycle; a tensile force being positive and a compressive force being negative

3.5
minimum force
F_{min}
force having the lowest algebraic value in the cycle; a tensile force being positive and a compressive force being negative

© ISO 2012 – All rights reserved

Documents
Document Sharing Hub
Full document details: BS ISO 12108:2012

3.6
force range
ΔF
the algebraic difference between the maximum and minimum forces in a cycle

$$\Delta F = F_{max} - F_{min}$$

3.7
force ratio
R
algebraic ratio of the minimum force to maximum force in a cycle

$$R = F_{min}/F_{max}$$

NOTE 1 R is also called the stress ratio.

NOTE 2 R may also be calculated using the values of stress-intensity factors; $R = K_{min}/K_{max}$.

3.8
stress-intensity factor
K
magnitude of the ideal crack-tip stress field for the opening mode force application to a crack in a homogeneous, linear-elastically stressed body, where the opening mode of a crack corresponds to the force being applied to the body perpendicular to the crack faces only (mode I)

NOTE The stress-intensity factor is a function of applied force, crack length, specimen size and geometry.

3.9
maximum stress-intensity factor
K_{max}
highest algebraic value of the stress-intensity factor in a cycle, corresponding to F_{max} and current crack length

3.10
minimum stress-intensity factor
K_{min}
lowest algebraic value of the stress-intensity factor in a cycle, corresponding to F_{min} and current crack length

NOTE This definition remains the same, regardless of the minimum force being tensile or compressive. For a negative force ratio ($R < 0$), there is an alternate, commonly used definition for the minimum stress-intensity factor, $K_{min} = 0$. See 3.11.

3.11
stress-intensity factor range
ΔK
algebraic difference between the maximum and minimum stress-intensity factors in a cycle

$$\Delta K = K_{max} - K_{min}$$

NOTE 1 The force variables ΔK, R and K_{max} are related as follows: $\Delta K = (1 - R)\, K_{max}$.

NOTE 2 For $R \leq 0$ conditions, see 3.10 and 10.6.

NOTE 3 When comparing data developed under $R \leq 0$ conditions with data developed under $R > 0$ conditions, it may be beneficial to plot the da/dN data versus K_{max}.

3.12
fatigue crack growth threshold stress-intensity factor range
ΔK_{th}
asymptotic value of ΔK for which da/dN approaches zero

NOTE For most materials, the threshold is defined as the stress-intensity factor range corresponding to 10^{-8} mm/cycle. When reporting ΔK_{th}, the corresponding lowest decade of da/dN data used in its determination should also be included.

© ISO 2012 – All rights reserved
AVA Documents Document Sharing Hub
Full document details: BS ISO 12108:2012

3.13
normalized K-gradient
$C = (1/K)\ \mathrm{d}K/\mathrm{d}a$
fractional rate of change of K with increased crack length, a

$$C = 1/K\ (\mathrm{d}K/\mathrm{d}a) = 1/K_{\mathrm{max}}\ (\mathrm{d}K_{\mathrm{max}}/\mathrm{d}a) = 1/K_{\mathrm{min}}\ (\mathrm{d}K_{\mathrm{min}}/\mathrm{d}a) = 1/\Delta K\ (\mathrm{d}\Delta K/\mathrm{d}a)$$

3.14
K-decreasing test
test in which the value of the normalized K-gradient, C, is negative

NOTE A K-decreasing test is conducted by reducing the stress-intensity factor either by continuously shedding or by a series of steps, as the crack grows.

3.15
K-increasing test
test in which the value of C is positive

NOTE For standard specimens, a constant force amplitude results in a K-increasing test where the value of C is positive and increasing.

3.16
stress-intensity factor geometry function
$g\ (a/W)$
mathematical expression, based on experimental, numerical or analytical results, that relates the stress-intensity factor to force and crack length for a specific specimen configuration

3.17
crack-front curvature correction length
a_{cor}
difference between the average through-thickness crack length and the corresponding crack length at the specimen faces during the test

3.18
fatigue crack length
a_{fat}
length of the fatigue crack, as measured from the root of the machined notch

NOTE See Figure 12.

3.19
notch length
a_{n}
length of the machined notch, as measured from the load line to the notch root

NOTE See Figure 12.

4 Symbols and abbreviated terms

4.1 Symbols

See Table 1.

© ISO 2012 – All rights reserved

Documents
Document Sharing Hub
Full document details: BS ISO 12108:2012

Table 1 — Symbols and their designations

Symbol	Designation	Unit
Loading		
C	Normalized K-gradient	mm^{-1}
E	Tensile modulus of elasticity	MPa
F	Force	kN
F_{max}	Maximum force	kN
F_{min}	Minimum force	kN
ΔF	Force range	kN
K	Stress-intensity factor	$MPa \cdot m^{1/2}$
K_{max}	Maximum stress-intensity factor	$MPa \cdot m^{1/2}$
K_{min}	Minimum stress-intensity factor	$MPa \cdot m^{1/2}$
ΔK	Stress-intensity factor range	$MPa \cdot m^{1/2}$
ΔK_i	Initial stress-intensity factor range	$MPa \cdot m^{1/2}$
ΔK_{th}	Fatigue crack growth threshold stress-intensity factor range	$MPa \cdot m^{1/2}$
N	Number of cycles	1
R	Force ratio or stress ratio	1
R_m	Ultimate tensile strength at the test temperature	MPa
$R_{p0,2}$	0,2 % proof strength at the test temperature	MPa
Geometry		
a	Crack length or size measured from the reference plane to the crack tip	mm
a_{cor}	Crack-front curvature correction length	mm
a_{fat}	Fatigue crack length measured from the notch root	mm
a_n	Machined notch length	mm
a_p	Precrack length	mm
B	Specimen thickness	mm
D	Hole diameter for CT, SENT or CCT specimen, loading tup diameter for bend specimens	mm
$g(a/W)$	Stress-intensity factor geometry function	1
h	Notch height	mm
W	Specimen width, distance from reference plane to edge of specimen	mm
$(W - a)$	Minimum uncracked ligament	mm
Crack growth		
da/dN	Fatigue crack growth rate	mm/cycle
Δa	Change in crack length, crack extension	mm

4.2 Abbreviated terms for specimen identification

CT Compact tension

CCT Centre cracked tension

SENT Single edge notch tension

SEN B3 Three-point single edge notch bend

© ISO 2012 – All rights reserved

Documents
Document Sharing Hub

Full document details: BS ISO 12108:2012

SEN B4 Four-point single edge notch bend

SEN B8 Eight-point single edge notch bend

5 Apparatus

5.1 Testing machine

5.1.1 General

The testing machine shall have smooth start-up and a backlash-free force train if passing through zero force. See ISO 4965-1. Cycle to cycle variation of the peak force during precracking shall be less than ± 5 % and shall be held to within ± 2 % of the desired peak force during the test. ΔF shall also be maintained to within ± 2 % of the desired range during test. A practical overview of test machines and instrumentation is available [33], [34].

5.1.2 Testing machine alignment

It is important that adequate attention be given to alignment of the testing machine and during machining and installation of the grips in the testing machine.

For tension-compression testing, the length of the force train should be as short and stiff as practical. Non-rotating joints should be used to minimize off-axis motion.

Asymmetry of the crack front is an indication of misalignment; a strain gauged specimen similar to the test article under investigation can be used in aligning the force train and to minimize nonsymmetrical stress distribution and/or bending strain to less than 5 %.

5.1.3 Force measuring system

Accuracy of the force measuring system shall be verified periodically in the testing machine. The calibration for the force transducer shall be traceable to a national organization of metrology. The force measuring system shall be designed for tension and compression fatigue testing and possess great axial and lateral rigidity. The indicated force, as recorded as the output from the computer in an automated system or from the final output recording device in a noncomputer system, shall be within the permissible variation from the actual force. The force transducer's capacity shall be sufficient to cover the range of force measured during a test. Errors greater than 1 % of the difference between minimum and maximum measured test force are not acceptable.

The force measuring system shall be temperature compensated, not have zero drift greater than 0,002 % of full scale, nor have a sensitivity variation greater than 0,002 % of full scale over a 1 °C change. During elevated and cryogenic temperature testing, suitable thermal shielding/compensation shall be provided to the force measuring system so it is maintained within its compensation range.

5.2 Cycle-counter

An accurate digital device is required to count elapsed force cycles. A timer is to be used only as a verification check on the accuracy of the counter. It is preferred that individual force cycles be counted. However, when the crack velocity is below 10^{-5} mm/cycle, counting in increments of 10 cycles is acceptable.

5.3 Grips and fixtures for CT specimens

Force is applied to a CT specimen through pinned joints. The choice of this specimen and gripping arrangement necessitates tension-tension test conditions only. Figure 1 shows the clevis and mating pin assembly used at both the top and bottom of a CT specimen to apply the force perpendicular to the machined starter notch and crack plane. Suggested dimensions are expressed as a proportion of specimen width, W, or thickness, B, since these dimensions can vary independently within the limits specified in Clause 6. The pin holes have a generous clearance over the pin diameter, 0,2W minimum, to minimize resistance to specimen and pin in-plane rotation which has been shown to cause nonlinearity in the force versus displacement response [35]. A surface finish,

© ISO 2012 – All rights reserved

Documents
Document Sharing Hub
Full document details: BS ISO 12108:2012

Ra, range of 0,8 µm to 1,6 µm is suggested for grip surfaces. With this grip-and-pin arrangement, materials with low proof strength may sustain plastic deformation at the specimen pin hole; similarly, when testing high strength materials and/or when the clevis displacement exceeds 1,05*B*, a stiffer force pin, i.e. a diameter greater than 0,225*W*, may be required. As an alternative approach to circumvent plastic deformation, a flat bottom clevis hole may be used along with a pin diameter equaling 0,24*W*. Any heat treatable steel thermally processed to a 0,2 % proof strength of 1 000 MPa used in fabricating the clevises will usually provide adequate strength and resistance to fretting, galling and fatigue.

In addition to the generous pin hole clearance, the mating surfaces shall be prepared to minimize friction which could invalidate the provided *K*-calibration expression. The use of high viscosity lubricants and greases has been shown to cause hysteresis in the force versus displacement response and is not recommended if compliance measurements are required.

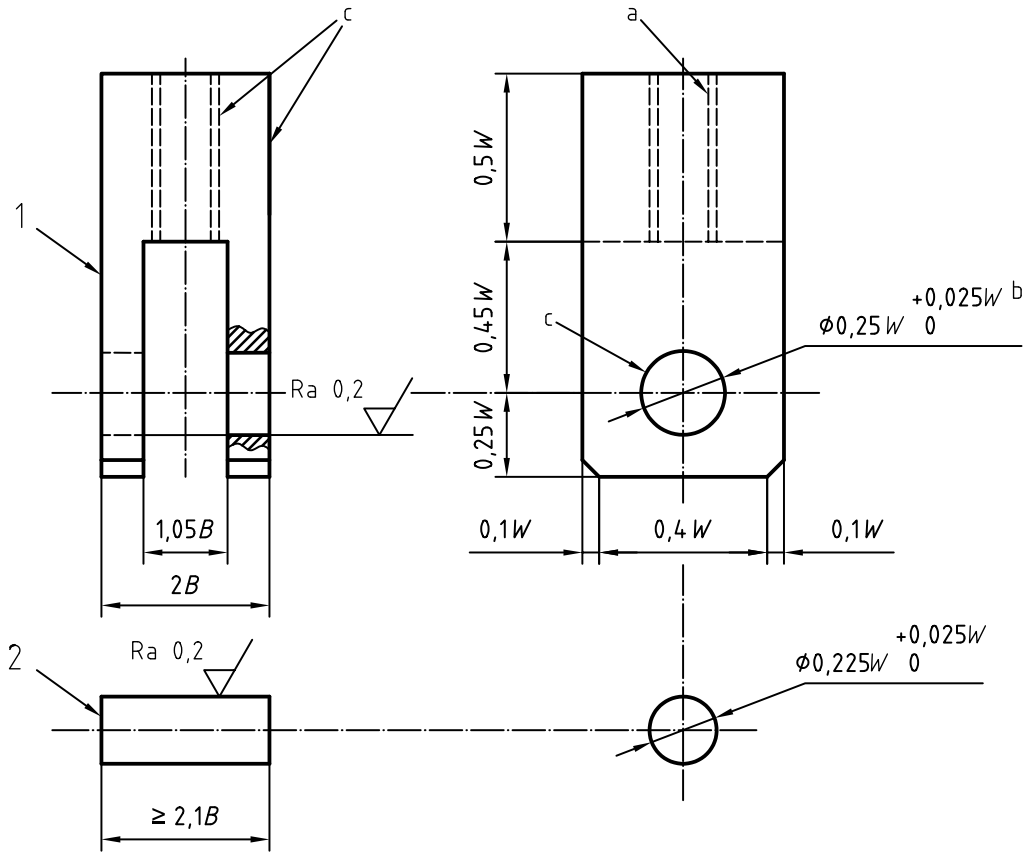

Key

1 clevis

2 pin

NOTE For high strength materials or large pin displacements, the pin may be stiffened by increasing the diameter to 0,24*W* along with using D-shaped flat bottom holes.

a Loading rod thread.

b Through diameter.

c These surfaces are perpendicular and parallel as applicable to within 0,05*W*.

Figure 1 — Clevis and pin assembly for gripping a CT specimen

© ISO 2012 – All rights reserved

Documents
Document Sharing Hub

Full document details: BS ISO 12108:2012

5.4 Grips and fixtures for CCT/SENT specimens

5.4.1 General

Force can be applied to CCT and SENT specimens through pinned joints and/or through frictional clamping grips. Gripping for the CCT and SENT specimens depends on specimen width and whether the test condition is to be tension-tension or tension-compression. The minimum CCT specimen gauge length varies with gripping arrangement and shall provide a uniform stress distribution in the gauge length during the test.

Under certain conditions, the CCT specimen can be prone to general and localized buckling. The use of buckling constraints is recommended.[49]

Formula (6) is applicable only for a single pinned end SENT specimen, as shown in Figure 2. The SENT pinned end specimen (Figure 2) is appropriate for tension-tension test conditions only.

Formula (7) is applicable for a SENT specimen with clamped ends and is appropriate for both tension and compression force conditions. For the clamped-end SENT specimen, the grips must be sufficiently stiff to circumvent any rotation of the specimen ends or any lateral movement of the crack plane; the presence of either condition introduces errors into the stress-intensity factor calculation [29].

Surface roughness values in micrometres

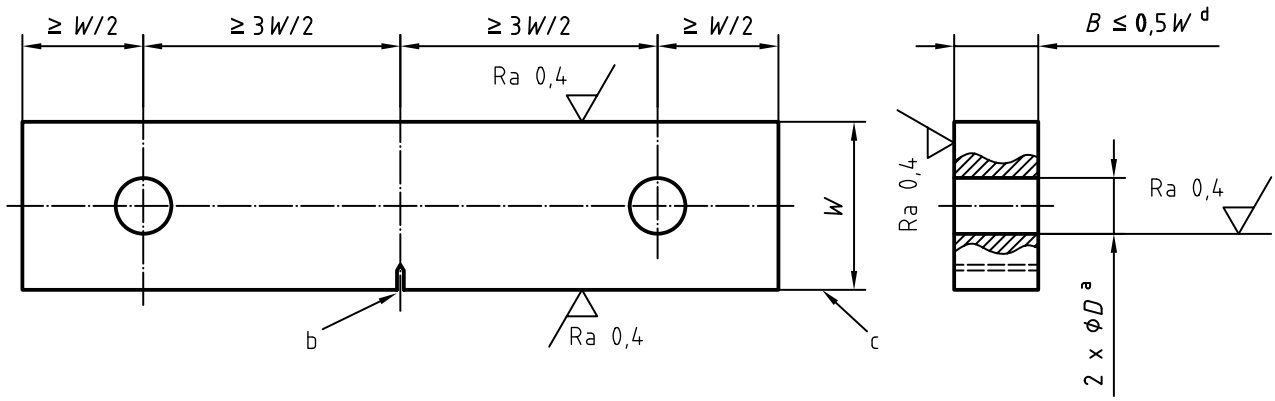

NOTE 1 The machined notch is centred to within ± 0,005W (TIR[e]).

NOTE 2 The surfaces are parallel and perpendicular to within ± 0,002W.

NOTE 3 The crack length is measured from the reference loading plane containing the starter V-notch.

NOTE 4 This specimen is recommended for notch root tension at a force ratio $R > 0$ only.

a $D = W / 3$.

b See Figure 12 for notch detail.

c Reference plane.

d Recommended thickness: $B \leq 0{,}5W$.

e Total indicated reference value.

Figure 2 — Standard single edge notch tension, SENT, specimen

5.4.2 Tension-tension testing of a CCT specimen

For tension-tension testing of a specimen with a width 2W, less than 75 mm, as shown in Figure 3, a clevis with single force pin is acceptable for gripping provided the specimen gauge length, defined here as the distance between the pin hole centrelines, be at least 6W. Shims may be helpful in circumventing fretting fatigue at the specimen's pin hole. Another step that can be taken to prevent crack initiation at the pin holes is the welding or adhesive bonding of reinforcement plates or tabs to the gripping area, especially when testing very thin materials. Cutting the test section down in width to form a "dog bone" shaped specimen design is another

© ISO 2012 – All rights reserved

Documents
Document Sharing Hub
Full document details: BS ISO 12108:2012

measure that can be adopted to circumvent failure at the pin holes; here the gauge length is defined as the uniform width section and it shall be at least 3,4W in length.

For tension-tension testing of a specimen with a width greater than 75 mm, distributing the force across the specimen width with multiple pin holes is recommended. A serrated grip surface at the specimen-grip interface increases the force that can be transferred. With this force application arrangement, the gauge length between the innermost rows of pin holes must be at least 3W.

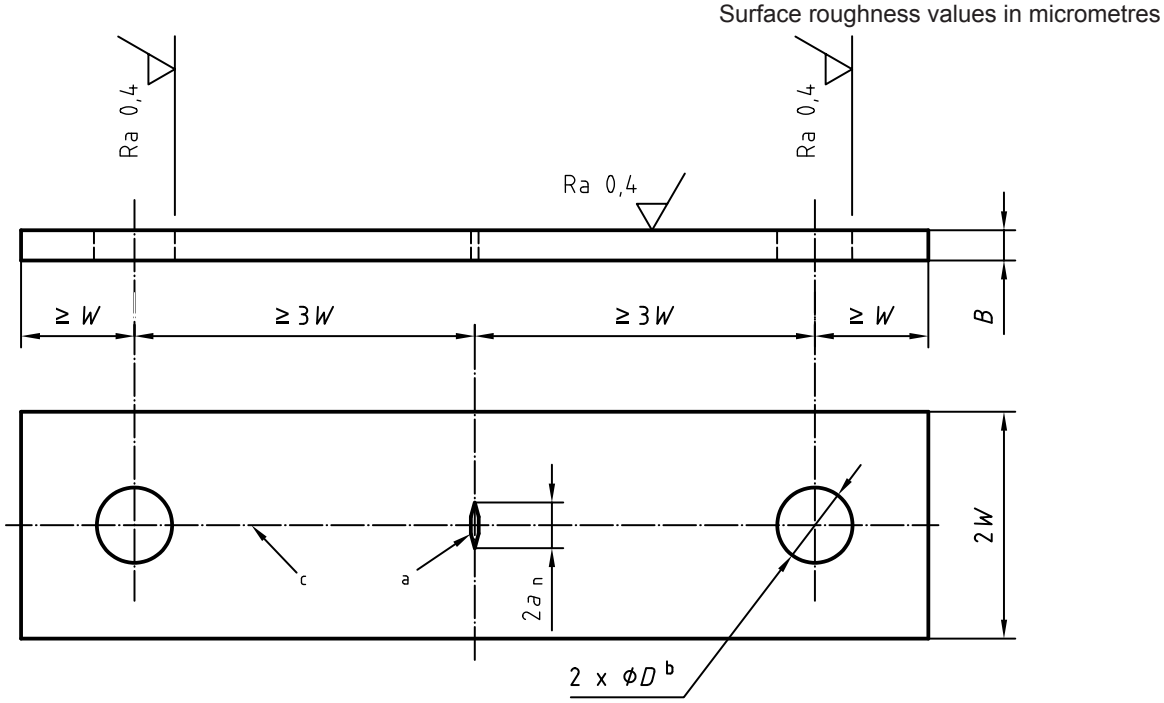

NOTE 1 The machined notch is centred to within ± 0,002W.

NOTE 2 The faces are parallel to ± 0,05 mm/mm.

NOTE 3 The two faces are not out-of-plane more than 0,05 mm.

NOTE 4 The crack length is measured from the reference plane of the longitudinal centreline.

NOTE 5 The clevis and pin loading system is not suitable for a force ratio $R < 0$.

NOTE 6 Special gripping systems may be used for a force ratio $R < 0$ such as shown in Figure 4.

[a] See Figure 12 for notch detail.

[b] $D = 2W/3$.

[c] Reference plane.

Figure 3 — Standard pinned end centre cracked tension, CCT, specimen for $2W \leq$ 75 mm

5.4.3 Tension-compression testing of a CCT specimen

A backlash-free gripping arrangement shall be used for tension-compression testing of the CCT specimen. Various commercially available pneumatic and hydraulic wedge grips that provide adequate clamping force may be used. The minimum gauge length for a clamped CCT specimen is 2,4W.

For tension-compression testing of a CCT specimen, Figure 4 presents a design that affords a simple backlash free grip that provides improved force transfer through multiple pins plus frictional force transfer via specimen clamp-up with the serrated gripping surfaces. The compressive condition between the pins and the specimen's end surfaces, induced by drawing the wedges together, affords large reverse force excursions

© ISO 2012 – All rights reserved
Documents
Document Sharing Hub
Full document details: BS ISO 12108:2012

while circumventing elongation of the pin holes. The minimum gauge length for this specimen is 2,4W between the grip end surfaces and 3W between the inner rows of pins, as stated above.

Dimensions in millimetres

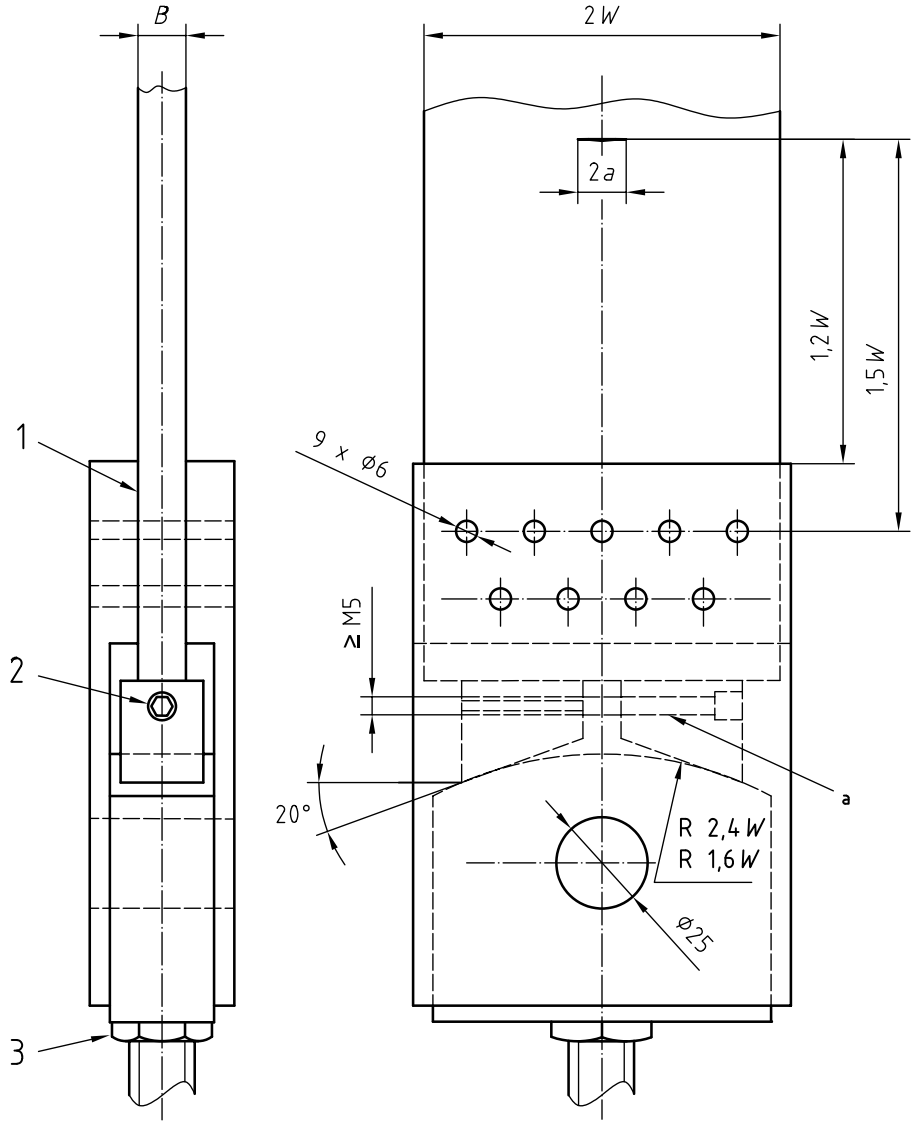

Key

1 Serrated sideplate surface

2 Countersunk cap screw

3 Lock nut

NOTE 1 Made of hardened steel, e.g. ≥ 40 HRC.

NOTE 2 Serrated side plates vary in thickness to accommodate approximately 2 mm to 3 mm, range in thickness B.

[a] Body drilled.

Figure 4 — Example of backlash free grip for a CCT specimen

5.4.4 Alignment of CCT specimen grips

The CCT specimen is sensitive to misalignment and nonsymmetrical force application, especially in tension-compression testing where gimbaled connections are not used, which can readily lead to violation of the through thickness crack curvature and/or symmetry validity criteria. It is recommended that bending strain

© ISO 2012 – All rights reserved

Documents
Document Sharing Hub
Full document details: BS ISO 12108:2012