BS ISO 12141:2024

BSI Standards Publication

Stationary source emissions — Determination of low range mass concentration of dust — Manual gravimetric method

Documents
Document Sharing Hub

Full document details: BS ISO 12141:2024

National foreword

This British Standard is the UK implementation of ISO 12141:2024. It supersedes BS ISO 12141:2002, which is withdrawn.

The UK participation in its preparation was entrusted to Technical Committee EH/2/1, Stationary source emission.

A list of organizations represented on this committee can be obtained on request to its committee manager.

Contractual and legal considerations

This publication has been prepared in good faith, however no representation, warranty, assurance or undertaking (express or implied) is or will be made, and no responsibility or liability is or will be accepted by BSI in relation to the adequacy, accuracy, completeness or reasonableness of this publication. All and any such responsibility and liability is expressly disclaimed to the full extent permitted by the law.

This publication is provided as is, and is to be used at the recipient's own risk.

The recipient is advised to consider seeking professional guidance with respect to its use of this publication.

This publication is not intended to constitute a contract. Users are responsible for its correct application.

© The British Standards Institution 2024
Published by BSI Standards Limited 2024

ISBN 978 0 539 24499 1

ICS 13.040.40

Compliance with a British Standard cannot confer immunity from legal obligations.

This British Standard was published under the authority of the Standards Policy and Strategy Committee on 30 September 2024.

Amendments/corrigenda issued since publication

Date	Text affected

Documents
Document Sharing Hub

Full document details: BS ISO 12141:2024

International Standard

ISO 12141

Second edition
2024-09

Stationary source emissions — Determination of low range mass concentration of dust — Manual gravimetric method

Émissions de sources fixes — Détermination de faibles concentrations en masse de poussières — Méthode gravimétrique manuelle

Reference number
ISO 12141:2024(en)

© ISO 2024

Documents
Document Sharing Hub

Full document details: BS ISO 12141:2024

COPYRIGHT PROTECTED DOCUMENT

© ISO 2024

All rights reserved. Unless otherwise specified, or required in the context of its implementation, no part of this publication may be reproduced or utilized otherwise in any form or by any means, electronic or mechanical, including photocopying, or posting on the internet or an intranet, without prior written permission. Permission can be requested from either ISO at the address below or ISO's member body in the country of the requester.

ISO copyright office
CP 401 • Ch. de Blandonnet 8
CH-1214 Vernier, Geneva
Phone: +41 22 749 01 11
Email: copyright@iso.org
Website: www.iso.org

Published in Switzerland

Documents
Document Sharing Hub
Full document details: BS ISO 12141:2024

Contents

Page

Foreword ... **v**
Introduction ... **vi**
1 Scope ... **1**
2 Normative references ... **1**
3 Terms and definitions ... **1**
4 Symbols and abbreviations ... **5**
4.1 Symbols ... 5
4.2 Abbreviations ... 5
5 Principle ... **6**
6 Measurement planning and sampling strategy ... **6**
6.1 Measurement planning ... 6
6.2 Sampling strategy ... 7
6.2.1 General ... 7
6.2.2 Measurement section and measurement plane ... 7
6.2.3 Minimum number and location of measurement points ... 7
6.2.4 Measurement ports and working platform ... 7
7 Equipment and materials ... **8**
7.1 Gas velocity, temperature, pressure and composition measurement devices ... 8
7.2 Sampling equipment ... 8
7.2.1 Sampling system ... 8
7.2.2 Filtration device ... 8
7.2.3 Entry nozzle ... 12
7.2.4 Suction tube for out-stack filtration devices ... 12
7.2.5 Suction unit ... 12
7.2.6 Gas metering devices ... 12
7.3 Dust deposit recovery accessories ... 14
7.4 Equipment for conditioning and weighing ... 14
8 Weighing procedure ... **14**
8.1 General ... 14
8.2 Pre-sampling conditioning ... 14
8.3 Weighing ... 15
8.4 Post-sampling treatment of weighed parts ... 15
8.5 Post-sampling treatment of the rinsing solutions ... 16
8.6 Improvement of the weighing procedure ... 16
9 Sampling procedure ... **16**
9.1 Preparation ... 16
9.2 Filter handling ... 17
9.3 Pre-measurements ... 17
9.4 Leak test ... 18
9.5 Sampling ... 18
9.6 Recovery of deposits upstream of the filter ... 19
9.6.1 General ... 19
9.6.2 Rinsing procedure ... 20
9.7 Field blank ... 20
10 Calculation ... **20**
10.1 Sampling volumetric flow rate ... 20
10.2 Dust concentration ... 21
11 Measurement report ... **21**
Annex A (informative) **Performance characteristics of the method obtained in the method validation** ... **23**

© ISO 2024 – All rights reserved

Documents
Document Sharing Hub
Full document details: BS ISO 12141:2024

Annex B (informative) **Influence of the isokinetic rate on the representativeness of the collected particles** 25
Annex C (informative) **Proven design of the entry nozzles** 31
Annex D (informative) **Summary of the requirements** 33
Annex E (normative) **Sampling volume, flow rate and duration** 34
Annex F (informative) **Examples of weighing bias** 35
Annex G (informative) **Determination of the measurement uncertainty** 37
Annex H (informative) **Thermal behaviour of dusts** 51
Annex I (informative) **Significant technical changes** 52
Bibliography 53

© ISO 2024 – All rights reserved

Documents
Document Sharing Hub
Full document details: BS ISO 12141:2024

Foreword

ISO (the International Organization for Standardization) is a worldwide federation of national standards bodies (ISO member bodies). The work of preparing International Standards is normally carried out through ISO technical committees. Each member body interested in a subject for which a technical committee has been established has the right to be represented on that committee. International organizations, governmental and non-governmental, in liaison with ISO, also take part in the work. ISO collaborates closely with the International Electrotechnical Commission (IEC) on all matters of electrotechnical standardization.

The procedures used to develop this document and those intended for its further maintenance are described in the ISO/IEC Directives, Part 1. In particular, the different approval criteria needed for the different types of ISO document should be noted. This document was drafted in accordance with the editorial rules of the ISO/IEC Directives, Part 2 (see www.iso.org/directives).

ISO draws attention to the possibility that the implementation of this document may involve the use of (a) patent(s). ISO takes no position concerning the evidence, validity or applicability of any claimed patent rights in respect thereof. As of the date of publication of this document, ISO had not received notice of (a) patent(s) which may be required to implement this document. However, implementers are cautioned that this may not represent the latest information, which may be obtained from the patent database available at www.iso.org/patents. ISO shall not be held responsible for identifying any or all such patent rights.

Any trade name used in this document is information given for the convenience of users and does not constitute an endorsement.

For an explanation of the voluntary nature of standards, the meaning of ISO specific terms and expressions related to conformity assessment, as well as information about ISO's adherence to the World Trade Organization (WTO) principles in the Technical Barriers to Trade (TBT), see www.iso.org/iso/foreword.html.

This document was prepared by CEN (as EN 13284-1:2017) and drafted in accordance with its editorial rules. It was assigned to Technical Committee ISO/TC 146, *Air quality*, Subcommittee SC 1, *Stationary source emissions*, and adopted under the “fast-track procedure”.

This second edition cancels and replaces the first edition (ISO 12141:2002), which has been technically revised.

The main changes are as follows:

— all technical changes have been listed in Annex I;

— "this European Standard" has been changed to "this document";

— "section" has been changed to "Clause" or "subclause".

Any feedback or questions on this document should be directed to the user’s national standards body. A complete listing of these bodies can be found at www.iso.org/members.html.

© ISO 2024 – All rights reserved

Documents
Document Sharing Hub
Full document details: BS ISO 12141:2024

Introduction

The measurement method specified in this document has been developed in close liaison and cooperation between ISO/TC 146/SC 1 and CEN/TC 264, resulting in the preparation of the first editions of the International Standard ISO 12141:2002 and the European Standard EN 13284-1:2001.

In the meantime, CEN/TC 264 has revised EN 13284-1:2001 in order to adapt the content to the state of the art. The basic concept of the measurement method has not been changed. Against this background and to ensure comparability of measurement results at international level, ISO/TC 146/SC 1 has decided to adopt EN 13284-1:2017 without technical changes. However, some editorial adjustments have been made to take account of the international application of this document. For example, references to EN 15259:2007 in EN 13284-1:2017 have been replaced in this document by references to the technically identical ISO 15259:2023.

To meet the specifications of this document, a certain level of accuracy for weighing the particle sample is needed. At low dust concentrations, this level of accuracy can be achieved by:

a) exercising extreme care in weighing, as per procedures of this document;

b) extending the sampling time at conventional sampling rates; or

c) sampling at higher rates for conventional sampling times (high-volume sampling).

High-volume sampling is not part of this document since it was not part of the validation of the measurement method.

The measurement method specified in this document can be used for the calibration of automated measuring systems (AMS) (see ISO 10155). If the waste gas contains unstable, reactive or semivolatile substances, the measurement depends on the filtration temperature, and in-stack methods can be more applicable than out-stack methods for the calibration of AMS.

© ISO 2024 – All rights reserved

Documents
Document Sharing Hub
Full document details: BS ISO 12141:2024

Stationary source emissions — Determination of low range mass concentration of dust — Manual gravimetric method

1 Scope

This document specifies the standard reference method (SRM) for the measurement of low dust concentration in ducted gaseous streams in the concentrations below 50 mg/m^3 at standard conditions.

This document is primarily developed and validated for gaseous streams emitted by waste incinerators. More generally, it can be applied to gases emitted from other stationary sources, and to higher concentrations.

If the gases contain unstable, reactive or semi-volatile substances, the measurement depends on the sampling and filter treatment conditions.

This method has been validated in field tests with special emphasis to dust concentrations around 5 mg/m^3. The results of the field tests are presented in Annex A.

2 Normative references

The following documents are referred to in the text in such a way that some or all of their content constitutes requirements of this document. For dated references, only the edition cited applies. For undated references, the latest edition of the referenced document (including any amendments) applies.

ISO 15259:2023, *Air quality — Measurement of stationary source emissions — Requirements for measurement sections and sites and for the measurement objective, plan and report*

ISO 16911-1, *Stationary source emissions — Manual and automatic determination of velocity and volume flow rate in ducts — Part 1: Manual reference method*

3 Terms and definitions

For the purposes of this document, the following terms and definitions apply.

ISO and IEC maintain terminology databases for use in standardization at the following addresses:

— ISO Online browsing platform: available at https://www.iso.org/obp

— IEC Electropedia: available at https://www.electropedia.org/

3.1
dust
particles, of any shape, structure or density, dispersed in the gas phase at the sampling point conditions which may be collected by filtration under specified conditions after representative sampling of the gas to be analysed, and which remain upstream of the filter and on the filter after drying under specified conditions

3.2
filtration temperature
temperature of the sampled gas immediately downstream of the filter

3.3
in-stack filtration
filtration in the duct with the filter in its filter housing placed immediately downstream of the sampling nozzle

© ISO 2024 – All rights reserved

Documents
Document Sharing Hub
Full document details: BS ISO 12141:2024

3.4
out-stack filtration
filtration outside of the duct with the filter in its heated filter housing placed downstream of the sampling nozzle and the suction tube

3.5
isokinetic sampling
sampling at a flow rate such that the velocity v_n and direction of the gas entering the sampling nozzle are the same as the velocity v_d and direction of the gas in the duct at the *measurement point* (3.10)

Note 1 to entry: Figure 1 gives an illustration of isokinetic sampling.

Note 2 to entry: Annex B shows the influence of the *isokinetic rate* (3.6) on the representativeness of the collected particles.

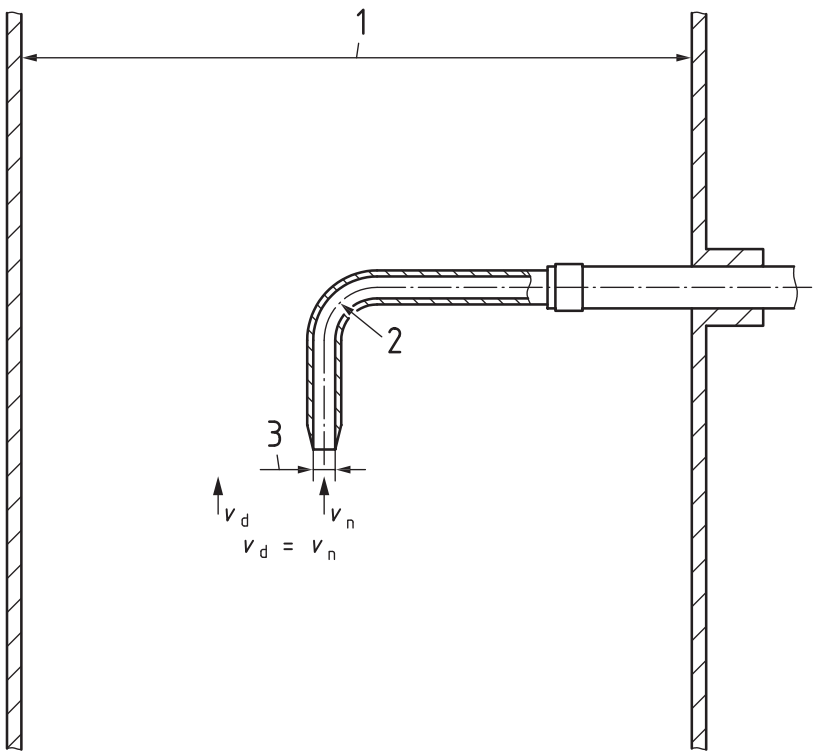

Key

1 duct
2 radius of the bend (minimum 1,5 d_p)
3 internal diameter of the suction tube d_p

Figure 1 — Isokinetic sampling

3.6
isokinetic rate
velocity ratio v_n/v_d expressed in percentage as a characteristic of the deviation from *isokinetic sampling* (3.5)

3.7
hydraulic diameter
d_h
quotient of four times the area A and the perimeter P of the *measurement plane* (3.8)

$$d_h = \frac{4 \times A}{P} \tag{1}$$

[SOURCE: ISO 15259:2023, 3.14]

© ISO 2024 – All rights reserved

Documents
Document Sharing Hub
Full document details: BS ISO 12141:2024

3.8
measurement plane
plane normal to the centreline of the duct at the sampling position

[SOURCE: ISO 15259:2023, 3.13]

Note 1 to entry: Measurement plane is also known as sampling plane.

3.9
measurement line
line in the sampling plane along which the sampling points are located, bounded by the inner duct wall

[SOURCE: ISO 15259:2023, 3.15]

Note 1 to entry: Measurement line is also known as sampling line.

Note 2 to entry: Figure 2 gives an illustration of definitions in relation to a circular duct.

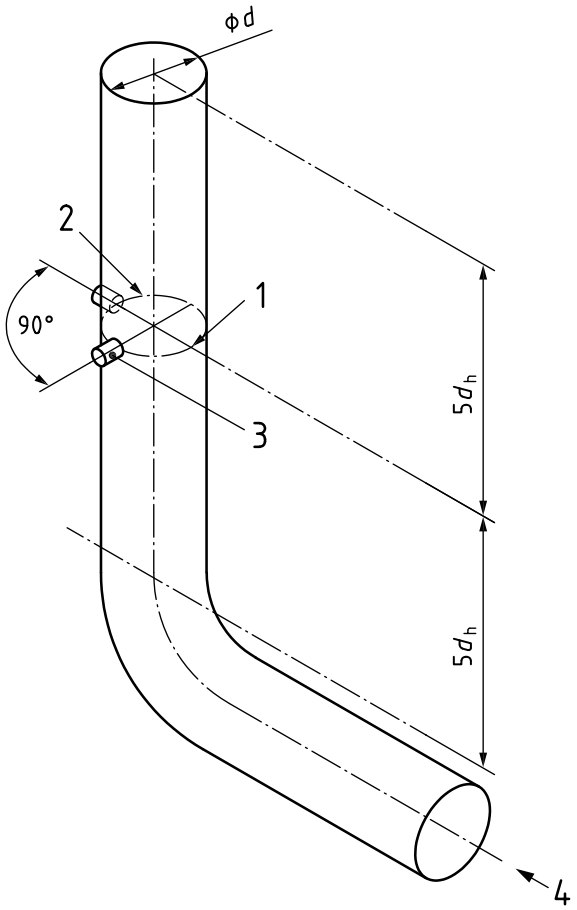

Key

1 measurement line
2 measurement plane
3 measurement port
4 flow direction

Figure 2 — Illustration of definitions in relation to a circular duct

© ISO 2024 – All rights reserved

Documents
Document Sharing Hub
Full document details: BS ISO 12141:2024

3.10
measurement point
position in the *measurement plane* (3.8) at which the sample stream is extracted or the measurement data are obtained directly

[SOURCE: ISO 15259:2023, 3.16]

Note 1 to entry: Measurement point is also known as sampling point.

3.11
measurement port
opening in the waste gas duct along the *measurement line* (3.9), through which access to the waste gas is gained

[SOURCE: ISO 15259:2023, 3.18]

Note 1 to entry: Measurement port is also known as sampling port or access port.

3.12
standard conditions
reference values for a dry gas at a pressure of 101,3 kPa and a temperature of 273,15 K

3.13
field blank
sample obtained according to the *field blank procedure* (3.14)

3.14
field blank procedure
procedure used to ensure that no significant contamination has occurred during all the steps of the measurement

Note 1 to entry: This includes for instance the equipment preparation in laboratory, its transport and installation in the field as well as the subsequent analytical work in the laboratory.

3.15
field blank value
result of a measurement performed according to the *field blank procedure* (3.14) at the plant site and in the laboratory

3.16
weighing control
procedure for the detection/correction of apparent weight variations due to possible changes between pre and post sampling weighing conditions

3.17
measurement series
successive measurements carried out at the same *measurement plane* (3.8) and at the same operating conditions of the industrial process

3.18
emission limit value
ELV
limit value given in regulations such as directives, ordinances, administrative regulations, permits, licences, authorizations or consents

Note 1 to entry: ELV can be stated as concentration limits expressed as half-hourly, hourly and daily averaged values, or mass flow limits expressed as hourly, daily, weekly, monthly or annually aggregated values.

Note 2 to entry: For purposes other than regulatory uses, the measurement value is compared to a stated reference value.

© ISO 2024 – All rights reserved

Documents
Document Sharing Hub
Full document details: BS ISO 12141:2024

4 Symbols and abbreviations

4.1 Symbols

For the purposes of this document, the following symbols apply.

A area of the measurement plane

c dust concentration

d diameter of the duct

d_h hydraulic diameter

d_n internal diameter of the sampling nozzle

d_p internal diameter of the suction tube

f_c correction factor

h_a humidity of the gas in actual conditions, in percentage volume

h_m humidity of the gas in measurement conditions, in percentage volume

m total mass of dust collected upstream of the filter (rinsing) and on the filter

o_m oxygen concentration in percentage volume of dry gas measured in the duct

o_{ref} oxygen reference concentration in percentage volume of dry gas

P perimeter of the measurement plane

p_a absolute pressure of gases in actual conditions in the duct

p_m absolute pressure of the gas in measurement conditions at the volume meter

Q_a sampling volumetric flow rate, expressed in the actual conditions in the duct

Q_m measured sampling volumetric flow rate at gas meter conditions

T_a temperature of the gas in actual conditions in the duct, in Kelvin

T_m temperature of the gas in measurement conditions at the volume meter, in Kelvin

V sample volume

v_d velocity of the gas in the duct at the measurement point

v_n velocity of the gas entering the sampling nozzle

4.2 Abbreviations

For the purposes of this document, the following abbreviations apply.

ELV emission limit value

PTFE polytetrafluoroethylene

© ISO 2024 – All rights reserved

Documents
Document Sharing Hub
Full document details: BS ISO 12141:2024

5 Principle

A sample stream of the gas is extracted from the main gas stream at representative measurement points for a measured period of time, with an isokinetically controlled flow rate and a measured volume. The dust entrained in the gas sample is separated by a pre-weighed plane filter, which is then dried and re-weighed. Deposits upstream of the filter in the sampling system are also recovered and weighed. The increase of mass of the filter and the deposited mass upstream the filter are attributed to dust collected from the sampled gas, which allows the dust concentration to be calculated.

Two different configurations of the sampling system may be used depending on the characteristics of gases to be sampled (see 7.2.2).

Valid measurements can be achieved only when:

a) the gas stream in the duct at the measurement site (sampling location) has a sufficiently steady velocity profile (see ISO 15259);

b) sampling is carried out without disturbance of the gas stream with a sharp edged nozzle facing into the stream under isokinetic conditions;

c) samples are taken at a pre-selected number of stated positions in the measurement plane, to allow for a non-uniform distribution of dust in the duct;

d) the sampling system is designed and operated to avoid condensation, chemical reactions and to minimize dust deposits upstream of the filter and to be leak free;

e) sampling is carried out at an appropriate filtration temperature, e.g. stack temperature or at least the recommended temperature of 160 °C (see Annex H);

f) dust deposits upstream of the filter are taken into account;

g) the field blank value does not exceed 10 % of the lowest emission limit value set for the process or 0,5 mg/m^3, whichever is greater;

h) the sampling and weighing procedures are adapted to the expected dust quantities;

i) the expanded uncertainty calculated by means of an uncertainty budget does not exceed the corresponding specification in the measurement objective. For regulatory purposes the expanded uncertainty shall not exceed 20 % of the emission limit value specified by the authorities unless specified otherwise by the competent authorities.

NOTE The Industrial Emissions Directive of the European Union (IED) e.g. specifies a maximum permissible uncertainty of 30 % of the daily emission limit value (ELV) for automated dust measuring systems. This requires that the expanded uncertainty of the SRM is lower for calibration purposes.

Annex D provides a summary of the requirements for the application of this measurement method.

6 Measurement planning and sampling strategy

6.1 Measurement planning

Emission measurements at a plant shall be carried out such that the results are representative of the emissions from this plant for operating conditions specified in the measurement objective and comparable with results obtained for other comparable plants. Therefore, dust measurements shall be planned in accordance with ISO 15259.

Before carrying out any measurements, the purpose of the sampling and the sampling procedures shall be discussed with the plant personnel concerned. The nature of the plant process, e.g. steady-state or cyclic, can affect the sampling programme. If the process can be performed in a steady-state, it is important that this is maintained during sampling.

© ISO 2024 – All rights reserved

Documents
Document Sharing Hub
Full document details: BS ISO 12141:2024

Dates, starting times, duration of survey and sampling periods as well as plant operating conditions during these periods shall be agreed with the plant management.

Preliminary calculations shall be made on the basis of expected dust concentration in order to verify that expected sampled dust quantities are consistent with attainable field blank values, and that no overloading of the filter occurs (see Annex E).

For sampling duration limited to 30 min, required for certain trial or regulatory purposes, the uncertainty of measurement can increase due to the limited sample volume. Furthermore, completion of sampling along two diameters within 30 min, even for medium size ducts, can require simultaneous sampling with two or more sampling systems.

Where possible, the sampling duration can be extended, which decreases the quantification limit and improves the measurement uncertainty (see Annex E). The sampling duration should be selected, to minimize the effect of non-steady-state conditions of the stationary source.

Taking into account the objective of the measurements and the conditions of waste gases to be sampled, the user shall choose between an in-stack or an out-stack filtration device. If gas in the duct contains droplets out-stack filtration devices shall be used.

A field blank shall be taken (see 9.7).

If no suitable sampling location exists in the plant, and/or that measurements have been carried out during non-steady-state conditions of the plant, which leads to an increase of the uncertainty of the measurements, it shall be stated in the report.

6.2 Sampling strategy

6.2.1 General

Sampling requires a suitable measurement section and measurement plane.

The measurement plane shall be easily reached from convenient measurement ports and a safe working platform (see ISO 15259).

Sampling shall be carried out at a sufficient number of measurement points located on the measurement plane as specified by ISO 15259.

6.2.2 Measurement section and measurement plane

The measurement section and measurement plane shall meet the requirements of ISO 15259.

6.2.3 Minimum number and location of measurement points

The measurements shall be performed as grid measurements.

The dimensions of the measurement plane dictate the minimum number of measurement points. This number increases as the duct dimensions increase.

EN 15259 specifies the minimum number of measurement points to be used and the location in the measurement plane for circular and rectangular ducts. The number of measurement points and the location in the measurement plane shall be selected in accordance with ISO 15259.

6.2.4 Measurement ports and working platform

Measurement ports shall be provided for access to the measurement points selected in accordance with ISO 15259.

Examples of suitable measurement ports are given in ISO 15259.

For safety and practical reasons, the working platform shall comply with the requirements of ISO 15259.

© ISO 2024 – All rights reserved

Documents
Document Sharing Hub
Full document details: BS ISO 12141:2024

7 Equipment and materials

7.1 Gas velocity, temperature, pressure and composition measurement devices

The equipment used for the point-related velocity measurements to establish isokinetic conditions shall meet the requirements of ISO 16911-1.

When expressing dust concentrations at standard conditions on a dry basis, and/or where the concentrations shall be expressed in relation to a reference oxygen concentration, the necessary measuring equipment shall meet the requirements of the applicable standards.

7.2 Sampling equipment

7.2.1 Sampling system

The sampling system principally consists of:

a) filtration device consisting of the filter housing and filter;

b) entry nozzle;

c) suction tube for out-stack filtration devices;

d) gas pump;

e) gas metering device including cooling and drying system and system for controlling isokinetic sampling conditions.

All parts of the sampling system which come in contact with the sampled gas shall be made of corrosion resistant and, if necessary, heat resistant material, e.g. stainless steel, titanium, quartz or glass.

If further analysis of collected dust is to be performed, materials in contact with the sample gas and the filter should be fit for purpose to avoid contamination.

The surfaces of parts upstream the filter shall be smooth and the number of joints shall be kept to a minimum.

Any changes in bore diameter shall be smoothly tapered and not stepped.

The sampling equipment shall also be designed in order to facilitate the cleaning of internal parts upstream the filter.

All parts of the sampling system which come in contact with the sample gas shall be protected from contamination e.g. during handling and transportation.

7.2.2 Filtration device

7.2.2.1 General

The filtration device consists of the filter housing and the filter.

The filtration device is either located in the duct (in-stack filtration) or placed outside the duct (out-stack filtration):

a) in-stack filtration devices (see Figure 3):

The part of the tubing between nozzle and filter should be very short, thereby minimizing dust deposits upstream of the filter. Due to available access port dimensions on ducts, the filter diameter is then typically limited to 50 mm, with a sample flow rate of approximately 1 m^3/h to 3 m^3/h. Since the filtration temperature is generally identical to that of the gas in the duct, filter clogging can occur if the stack gas contains water droplets.

© ISO 2024 – All rights reserved

Documents
Document Sharing Hub
Full document details: BS ISO 12141:2024

To allow access to all measurement points in the duct, a leak free rigid tube of sufficient length (support tube) is used downstream of the filter housing for mechanical support of the filtration device.

b) out-stack filtration devices (see Figure 4):

The part of tubing between the nozzle and the filter (suction tube) shall be of sufficient length to allow access to all measurement points in the duct. The suction tube and the filter housing shall be temperature controlled, which provides evaporation of possible water droplets or avoids filtration difficulties related to high acid dew point gases. Filter diameters between 50 mm and 150 mm are generally used, with associate flow rate of 1 m^3/h to 10 m^3/h.

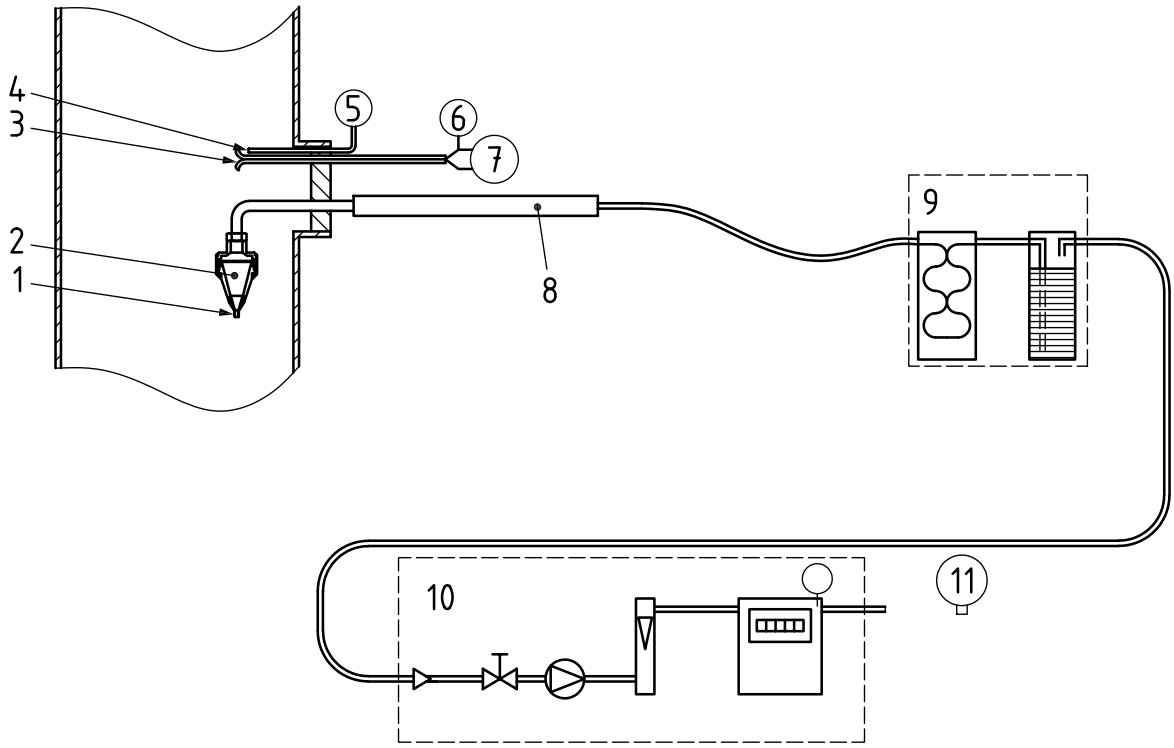

Key

1 entry nozzle
2 filter housing
3 pitot tube
4 temperature sensor
5 temperature indicator
6 static pressure measurement
7 dynamic pressure measurement
8 support tube (in-stack device)
9 cooling and drying system
10 suction unit and gas metering device
11 pressure gauge

Figure 3 — Example of a sampling system for in-stack filtration

© ISO 2024 – All rights reserved

Documents
Document Sharing Hub
Full document details: BS ISO 12141:2024

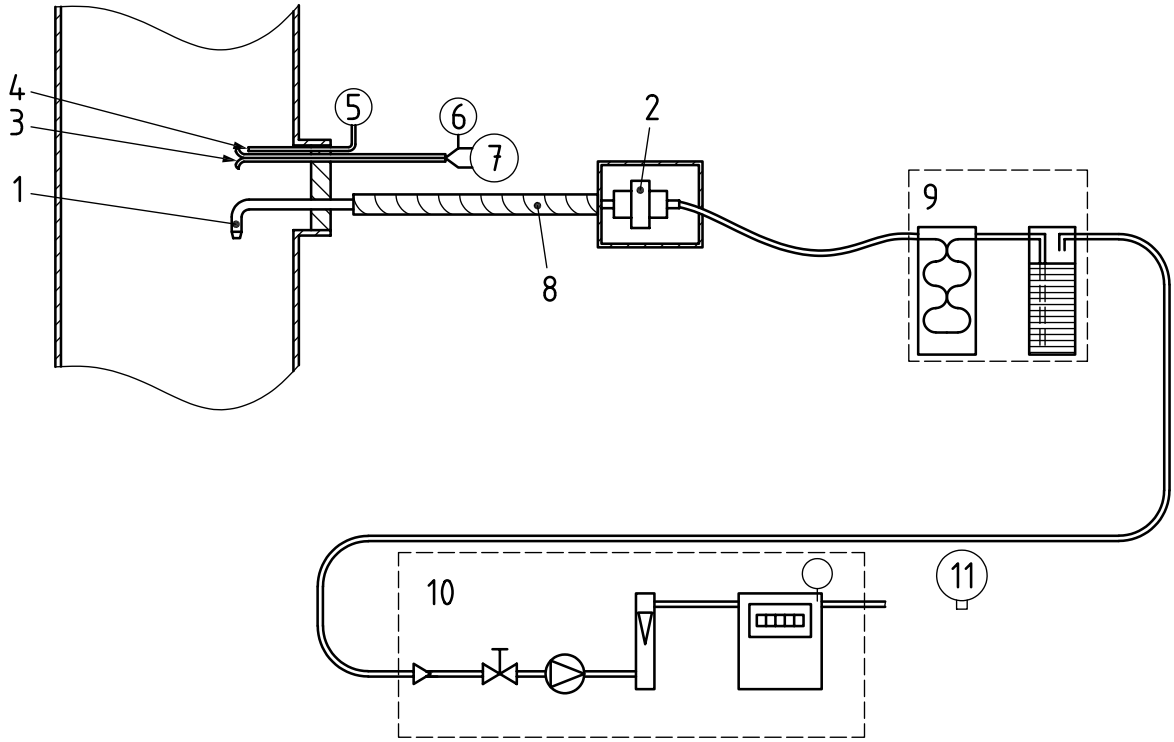

Key

1 entry nozzle
2 filter housing
3 pitot tube
4 temperature sensor
5 temperature indicator
6 static pressure measurement
7 dynamic pressure measurement
8 suction tube (out-stack device)
9 cooling and drying system
10 suction unit and gas metering device (see Figure 5)
11 pressure gauge

Figure 4 — Example of a sampling system for out-stack filtration

7.2.2.2 Filter housing

The filter housing is a casing in which the filter is mounted directly or by use of a filter holder. When the filter housing is placed out-stack, it shall be temperature controlled to maintain filtration conditions and to avoid condensation.

The parts to be weighed before and after sampling shall be either:

a) the filter, or the filter with the filter holder

In this case the dust deposits at the inlet of the filter housing shall be recovered and weighed (see 9.6). The use of a filter housing with a conical inlet of an angle less than 30° helps to minimize dust deposits.

b) the filter, inlet part of the filter housing and the upstream parts (e.g. nozzle)

In this case dust deposits upstream of the filter are taken directly into account. It is necessary to check whether the parts to be weighed are compatible with the range of the balance (see 8.3).

The filter housing and the filter holder shall be designed in such a way that no gas turbulence occurs near the joints.

© ISO 2024 – All rights reserved

Documents
Document Sharing Hub
Full document details: BS ISO 12141:2024

7.2.2.3 Filters

The filters to be used shall comply with the following minimum requirements:

— plane filter efficiency better than 99,5 % on a test aerosol with a mean particle diameter of 0,3 µm, at the maximum flow rate anticipated, or better than 99,9 % on a test aerosol of 0,6 µm mean particle diameter. This efficiency shall be certified by the filter supplier;

— the filter material shall not react with or adsorb gaseous compounds contained in the gas to be sampled, and shall be thermally stable, taking into account maximum temperature anticipated (e.g. for conditioning and sampling).

The choice of the filter should also take into account the following considerations:

— the pressure drop of the filter, and increase due to the collection of the dust while sampling. This depends on the kind of filter. As an example the pressure drop can be between from 3 kPa to 10 kPa for a filtration velocity in the range of 0,5 m/s;

— when using filters with organic binders, care shall be taken of possible weight variations due to binder losses by evaporation when heating;

— glass fibre filters can react with acidic compounds such as SO_3, which leads to an increase in weight; their use is not recommended;

— despite their weak mechanical properties quartz fibre filters are proven to be efficient in most cases;

— PTFE filters are also proven to be efficient, however the maximum allowable temperature of the gas passing through the filter is limited (see Table 1).

If it is anticipated to determine the composition of the dust collected, the choice of the filter material should take into account the filter blank value for the relevant compounds.

Table 1 gives an overview on filter material and their strengths and limitations.

Table 1 — Filter material and their strengths and limitations

Material	Strengths	Limitations
Cellulose nitrate		— cannot be exposed to temperatures above 125 °C — low filter capacity for dust
PTFE[a]	— proven efficiency — not prone to fibre loss	— cannot be exposed to temperatures above 230 °C — mechanically weak — prone to curling during conditioning in oven — electrostatic charges can affect weighing
Fibreglass	— strong mechanical properties	— reacts with acidic compounds, such as SO_3 — cannot be exposed to temperatures above 200 °C
Quartz fibre	— thermally stable — resistant to chemical reactions with waste gases, such as HF, HCl, SO_2, SO_3, H_2SO_4, NO and NO_2	— fibre loss may occur — weak mechanical properties — cannot be exposed to temperatures above 700 °C

[a] PTFE can be exposed to temperatures of up to 230 °C. However, some manufacturers have lower temperature limits, with some stating a limit of 120 °C.

Laser cut filters have a raised edge, due to the effect of the laser heating the filter material. For this reason laser cut filters can lose material, due to mechanical damage to the fused edge when the filter is clamped in a filter holder and removed from the holder for weighing.

© ISO 2024 – All rights reserved

Documents
Document Sharing Hub
Full document details: BS ISO 12141:2024