BS ISO 12164-1:2023

BSI Standards Publication

Hollow taper interface with flange contact surface

Part 1: Shanks of types A, AB, C, CB and EB

Documents
Document Sharing Hub

Full document details: BS ISO 12164-1:2023

National foreword

This British Standard is the UK implementation of ISO 12164-1:2023. It supersedes BS ISO 12164-1:2001, which is withdrawn.

The UK participation in its preparation was entrusted to Technical Committee W/-, Consumer Products and Services Sector Policy and Strategy Committee.

A list of organizations represented on this committee can be obtained on request to its committee manager.

Contractual and legal considerations

This publication has been prepared in good faith, however no representation, warranty, assurance or undertaking (express or implied) is or will be made, and no responsibility or liability is or will be accepted by BSI in relation to the adequacy, accuracy, completeness or reasonableness of this publication. All and any such responsibility and liability is expressly disclaimed to the full extent permitted by the law.

This publication is provided as is, and is to be used at the recipient's own risk.

The recipient is advised to consider seeking professional guidance with respect to its use of this publication.

This publication is not intended to constitute a contract. Users are responsible for its correct application.

© The British Standards Institution 2023
Published by BSI Standards Limited 2023

ISBN 978 0 539 05959 5

ICS 25.060.20

Compliance with a British Standard cannot confer immunity from legal obligations.

This British Standard was published under the authority of the Standards Policy and Strategy Committee on 31 October 2023.

Amendments/corrigenda issued since publication

Date	Text affected

Documents
Document Sharing Hub

Full document details: BS ISO 12164-1:2023

INTERNATIONAL STANDARD

ISO 12164-1

Second edition
2023-10

Hollow taper interface with flange contact surface —

Part 1: Shanks of types A, AB, C, CB and EB

Interfaces à cône creux-face —

Partie 1: Queues de type A, AB, C, CB et EB

Reference number
ISO 12164-1:2023(E)

Documents
Document Sharing Hub
© ISO 2023

Full document details: BS ISO 12164-1:2023

COPYRIGHT PROTECTED DOCUMENT

© ISO 2023

All rights reserved. Unless otherwise specified, or required in the context of its implementation, no part of this publication may be reproduced or utilized otherwise in any form or by any means, electronic or mechanical, including photocopying, or posting on the internet or an intranet, without prior written permission. Permission can be requested from either ISO at the address below or ISO's member body in the country of the requester.

ISO copyright office
CP 401 • Ch. de Blandonnet 8
CH-1214 Vernier, Geneva
Phone: +41 22 749 01 11
Email: copyright@iso.org
Website: www.iso.org

Published in Switzerland

© ISO 2023 – All rights reserved

Documents
Document Sharing Hub

Full document details: BS ISO 12164-1:2023

Contents

Page

Foreword ... **iv**

1 Scope ... **1**

2 Normative references ... **1**

3 Terms and definitions ... **1**

4 Hollow taper shanks, types and dimensions ... **1**
- 4.1 General ... 1
- 4.2 Hollow taper shanks of types A and AB ... 2
  - 4.2.1 General ... 2
  - 4.2.2 Balancing measures and basic dimensions ... 8
- 4.3 Hollow taper shank of types C and CB ... 27
  - 4.3.1 Hollow taper shank of type C ... 27
  - 4.3.2 Hollow taper shank of type CB and basic dimensions ... 28
- 4.4 Hollow taper shank of type EB ... 31
- 4.5 Dimensions ... 32

5 Balancing ... **38**
- 5.1 General ... 38
- 5.2 Fine balancing of HSK-AB and HSK-CB ... 38

6 Design ... **39**
- 6.1 HSK sizes and types ... 39
- 6.2 Medium-transfer unit ... 39
- 6.3 Clamping forces ... 39
- 6.4 Material and heat treatment ... 39

7 Designation ... **39**

Annex A (informative) **Clamping forces for shanks of types A, AB, C, CB and EB** ... **41**

Annex B (informative) **Hollow taper shanks of types C and CB with medium-transfer unit** ... **42**

Annex C (informative) **Overview of all different types of shanks** ... **43**

Bibliography ... **44**

© ISO 2023 – All rights reserved

Documents
Document Sharing Hub

Full document details: BS ISO 12164-1:2023

Foreword

ISO (the International Organization for Standardization) is a worldwide federation of national standards bodies (ISO member bodies). The work of preparing International Standards is normally carried out through ISO technical committees. Each member body interested in a subject for which a technical committee has been established has the right to be represented on that committee. International organizations, governmental and non-governmental, in liaison with ISO, also take part in the work. ISO collaborates closely with the International Electrotechnical Commission (IEC) on all matters of electrotechnical standardization.

The procedures used to develop this document and those intended for its further maintenance are described in the ISO/IEC Directives, Part 1. In particular, the different approval criteria needed for the different types of ISO document should be noted. This document was drafted in accordance with the editorial rules of the ISO/IEC Directives, Part 2 (see www.iso.org/directives).

ISO draws attention to the possibility that the implementation of this document may involve the use of (a) patent(s). ISO takes no position concerning the evidence, validity or applicability of any claimed patent rights in respect thereof. As of the date of publication of this document, ISO had not received notice of (a) patent(s) which may be required to implement this document. However, implementers are cautioned that this may not represent the latest information, which may be obtained from the patent database available at www.iso.org/patents. ISO shall not be held responsible for identifying any or all such patent rights.

Any trade name used in this document is information given for the convenience of users and does not constitute an endorsement.

For an explanation of the voluntary nature of standards, the meaning of ISO specific terms and expressions related to conformity assessment, as well as information about ISO's adherence to the World Trade Organization (WTO) principles in the Technical Barriers to Trade (TBT), see www.iso.org/iso/foreword.html.

This document was prepared by the Technical Committee ISO/TC 29, *Small tools*, Subcommittee SC 9, *Tools with defined cutting edges, holding tools, cutting items, adaptive items and interfaces*.

This second edition cancels and replaces the first edition (ISO 12164-1:2001), which has been technically revised.

The main changes are as follows:

— new hollow taper shank types added;

— new hollow taper shank of type AB has a peripherally grooved flange collar for automatic tool change, dynamically balanced;

— new hollow taper shank of type CB for manual tool change, dynamically balanced;

— new hollow taper shank of type EB has a peripherally grooved flange collar for automatic tool change, symmetrically designed;

— the balancing quality has been improved.

A list of all parts of the ISO 12164 series can be found on the ISO website.

Any feedback or questions on this document should be directed to the user's national standards body. A complete listing of these bodies can be found at www.iso.org/members.html.

© ISO 2023 – All rights reserved
Documents
Document Sharing Hub
Full document details: BS ISO 12164-1:2023

Hollow taper interface with flange contact surface —

Part 1: Shanks of types A, AB, C, CB and EB

1 Scope

This document specifies the dimensions of hollow taper shanks with flange contact surface (HSK). These shanks are the male part of the interface to the machine tools (e. g. milling/drilling, turning and grinding machines).

This document specifies five types of shanks:

— types A, AB and EB have a peripherally grooved flange for automatic tool change;

— types C and CB have a flange without peripheral groove and can only be changed manually.

HSK types A and AB can also be changed manually via radial access bore holes in the hollow shank tapers.

This document provides information for dynamically balanced HSK-AB and HSK-CB shanks balancing according to ISO 16084.

2 Normative references

The following documents are referred to in the text in such a way that some or all of their content constitutes requirements of this document. For dated references, only the edition cited applies. For undated references, the latest edition of the referenced document (including any amendments) applies.

ISO 2768-1, *General tolerances — Part 1: Tolerances for linear and angular dimensions without individual tolerance indications*

3 Terms and definitions

No terms and definitions are listed in this document.

ISO and IEC maintain terminology databases for use in standardization at the following addresses:

— ISO Online browsing platform: available at https://www.iso.org/obp

— IEC Electropedia: available at https://www.electropedia.org/

4 Hollow taper shanks, types and dimensions

4.1 General

Dimensions for all parameters of all types and sizes of HSK hollow taper shanks are provided in 4.5.

Parameters of the types C, CB and EB, not specified in 4.3 and 4.4, shall be taken from 4.5. Details not specified in 4.5 shall be chosen expediently.

Only the HSK types AB and CB have balancing recesses inside the low HSK taper groove and left and right of it (see Figures 1 and 11). They lead, together with the corresponding balancing measures of

© ISO 2023 – All rights reserved

AVA Documents Document Sharing Hub
Full document details: BS ISO 12164-1:2023

4.2.2 at the HSK shank flange, to dynamically balanced HSK shank of types AB and CB without changing their functionality.

Preferred zones for further balancing measures are specified in Clause 5.

For clamping forces for HSK shanks of types A, AB, C, CB and EB, see in Annex A.

For hollow taper shanks of types C and CB with medium - transfer unit, see Annex B.

For an overview of all different types of shanks, see Annex C.

Tolerances of form, orientation, location and run-out correspond to ISO 1101. Dimensions and tolerances of cones are in according to ISO 3040. Tolerances not specified shall be of tolerance class "m" in accordance with ISO 2768-1.

4.2 Hollow taper shanks of types A and AB

4.2.1 General

Figure 1 provides the parameters of the types A and AB, as well as common dimensions of all hollow taper shank types with flange contact surface (also called “HSK” or “HSK shank” in this document).

The HSK of type AB is the dynamically balanced version of the hollow taper shank for automatic tool change.

Many products with HSK-shanks, e. g. adapters and/or cutting tools, have symmetrical front parts of short length and/or small diameters. They can only be balanced dynamically, i.e. in two balancing planes, by applying the measures of the HSK-AB as described in this document. There are either no other areas available for sufficient and sensible mass compensation, or restrictions of tool handling mechanisms of existing machine tools make alternative measures impossible.

All parameters of Figure 1 but the recesses (#3) also apply to HSK of type A and can be taken from Table 1. Figure 1 and Table 1 show the general parameters and values of all HSK-AB and -A sizes.

The three balancing recesses at the low taper groove inside diameter d_3 (Figure 1, view Z and cross section C-C), as well as the balancing bore holes at the HSK shank flange in 4.2.2 only apply to the dynamically balanced HSK-AB. All radial bore holes (see Figure 1) shall be deburred.

In case of choosing any different geometry of the balancing bore holes at the shank flange the same unbalance at the same axial position of the centre of gravity shall be removed.

NOTE The positions of balancing bore holes at the HSK shank flange take mechanical restrictions of known automatic tool changing systems into account.

© ISO 2023 – All rights reserved
Documents
Document Sharing Hub
Full document details: BS ISO 12164-1:2023

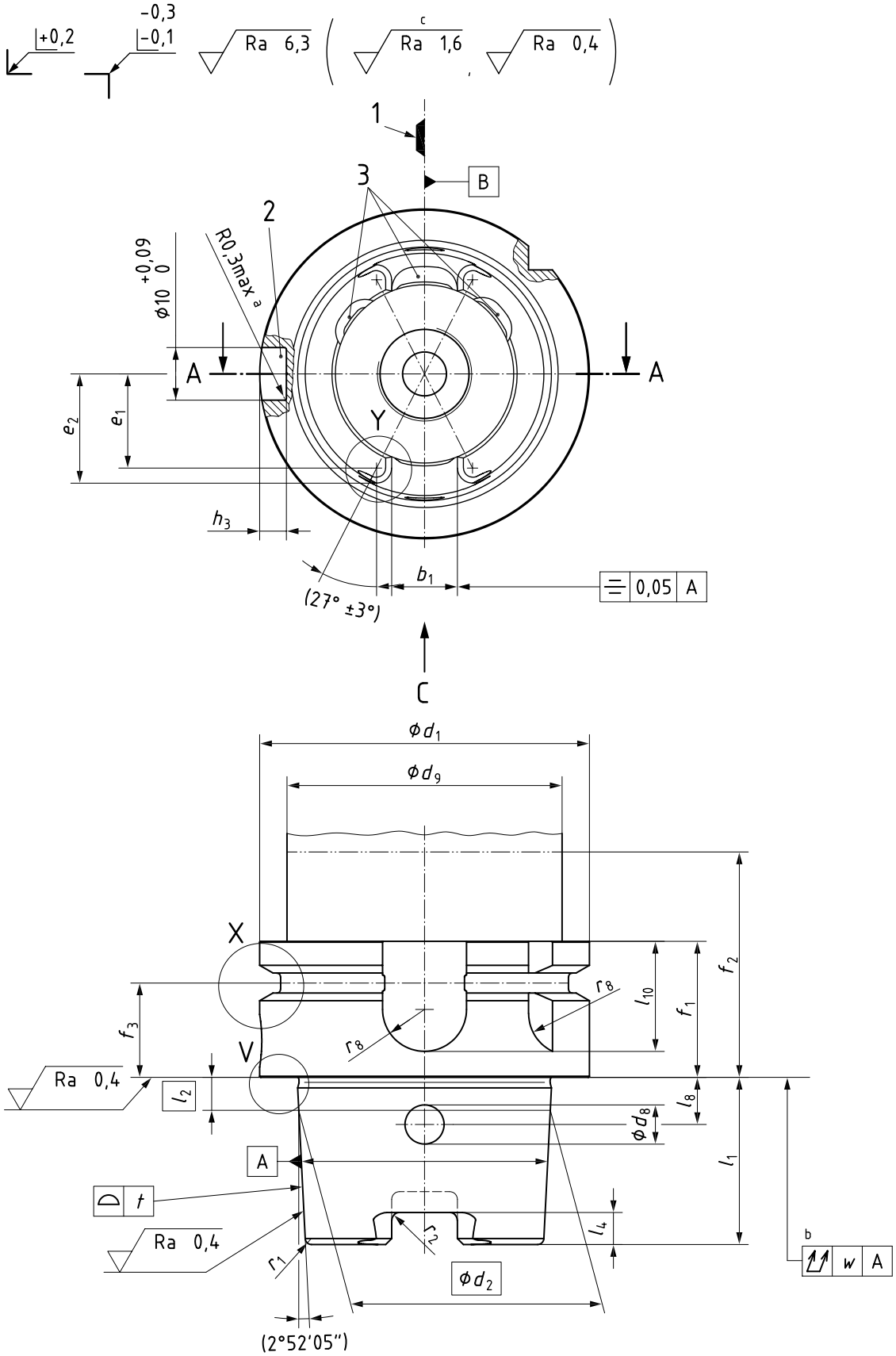

a) HSK-A and HSK-AB main and side view

© ISO 2023 – All rights reserved

Documents
Document Sharing Hub
Full document details: BS ISO 12164-1:2023

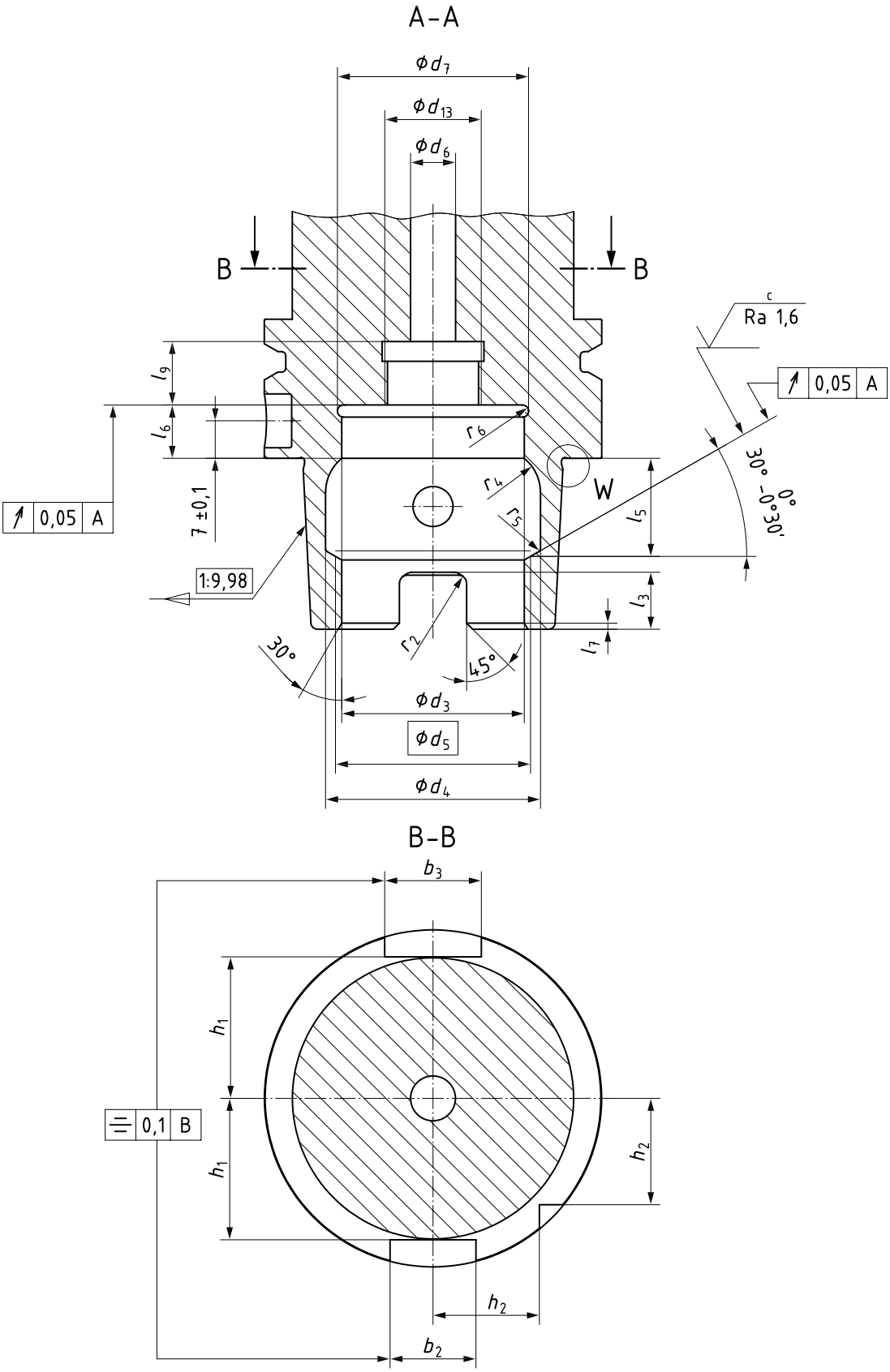

b) HSK-A and HSK-AB section A-A and section B-B

© ISO 2023 – All rights reserved

Documents
Document Sharing Hub
Full document details: BS ISO 12164-1:2023

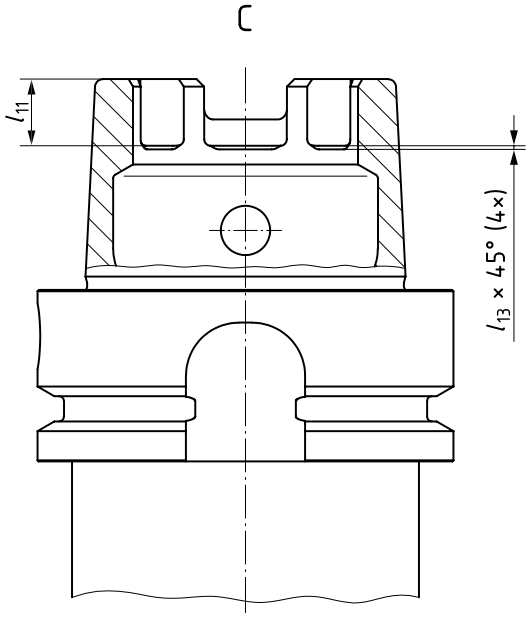

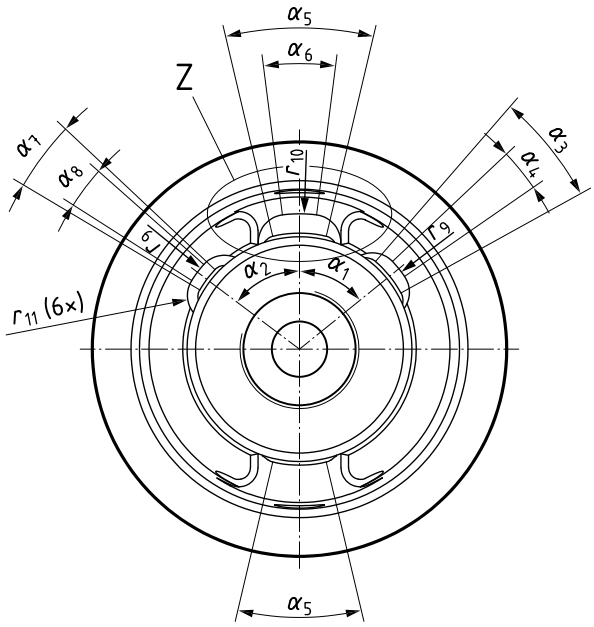

c) HSK-AB recesses

© ISO 2023 – All rights reserved

Documents
Document Sharing Hub
Full document details: BS ISO 12164-1:2023

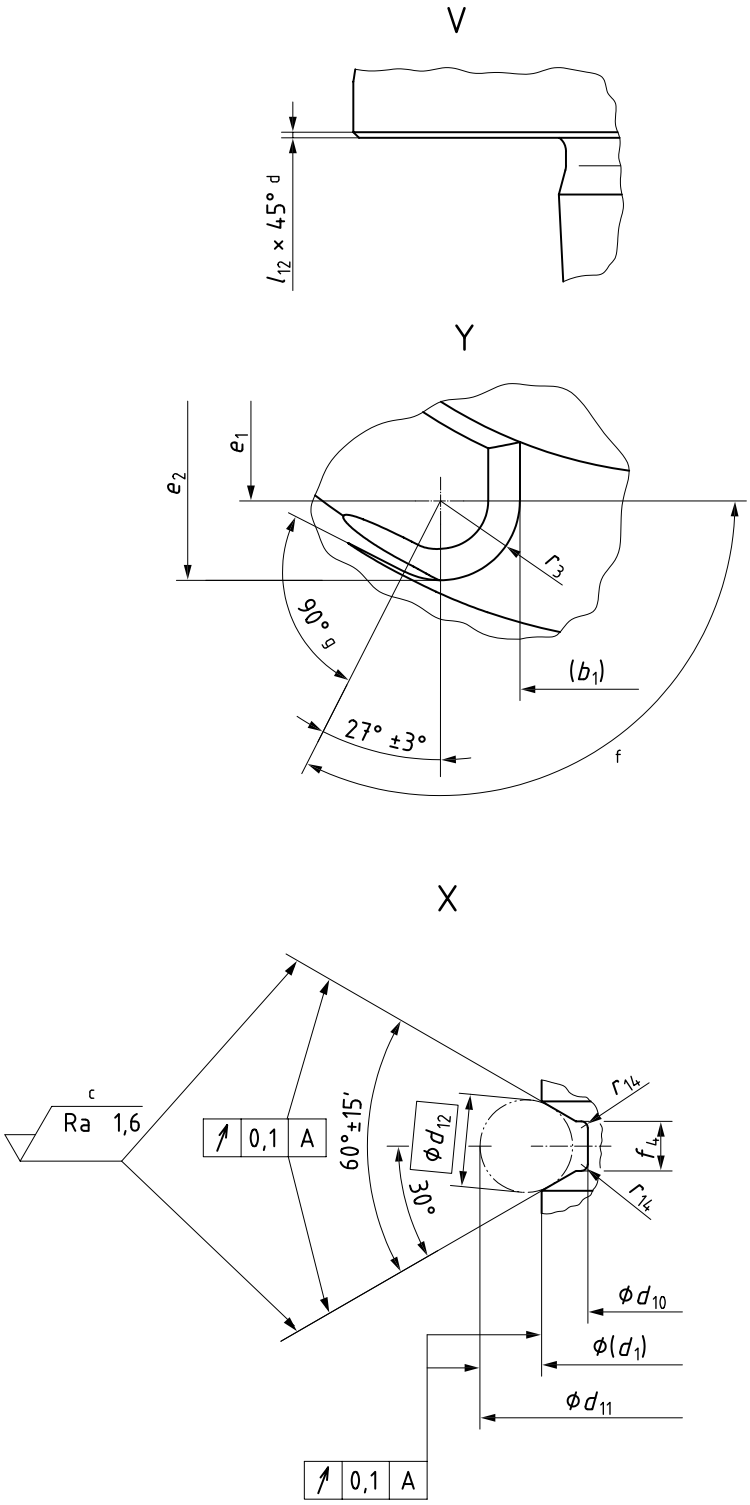

d) HSK-A and HSK-AB details

© ISO 2023 – All rights reserved
Documents
Document Sharing Hub
Full document details: BS ISO 12164-1:2023

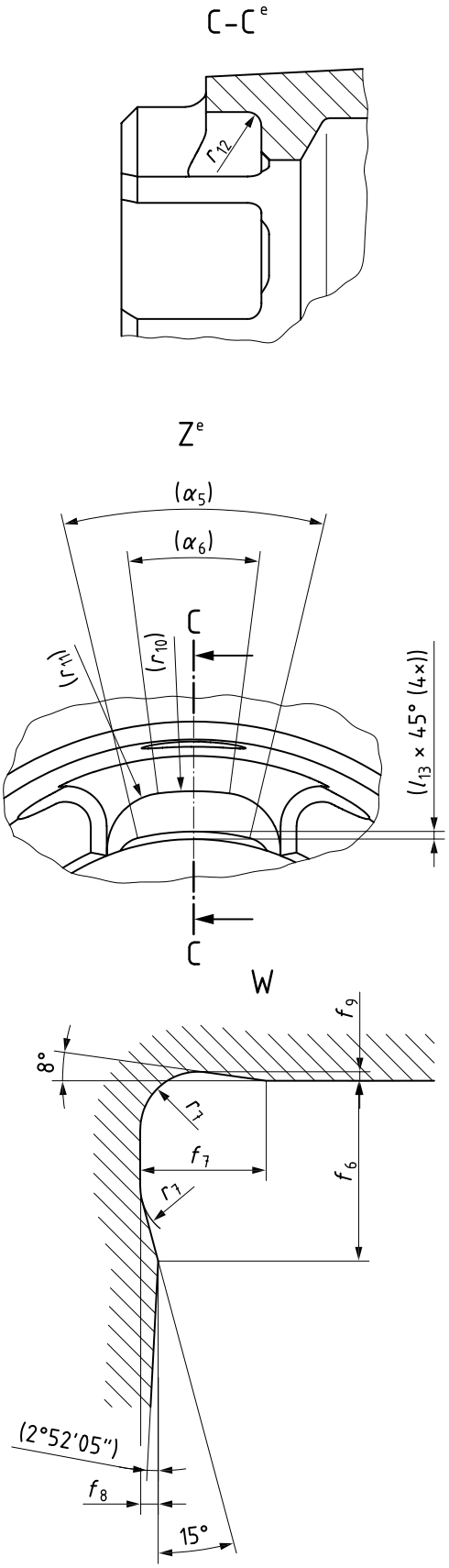

e) HSK-A and HSK-AB details

© ISO 2023 – All rights reserved

Documents
Document Sharing Hub
Full document details: BS ISO 12164-1:2023

Key

1 position of the cutting edge for right hand tools with single cutting edge

2 bore hole for data chip (also see 4.2.2 for data chip mass compensations) for type A optional

3 balancing recesses for type AB

[a] Or max. chamfer 0,3 × 45°.

[b] Not convex.

[c] Fine turning.

[d] Or radius.

[e] Balancing recesses (#3) only apply to HSK-AB.

[f] Area of r_3.

[g] Leadout of r_3.

All radial bore holes shall be deburred.

NOTE The HSK-AB taper shank flange has unbalances of different axial positions (axial OD grooves, "German notch" and data chip bore) which creates a certain dynamic unbalance. The balancing measures of 4.2.2 in combination with the (3) recesses of Figure 1 remove this dynamic unbalance.

Figure 1 — HSK-A and HSK-AB

4.2.2 Balancing measures and basic dimensions

4.2.2.1 General

The balancing measures described in this subclause and Table 1 and the recesses included in 4.2.1 and 4.2.2 have been set up for HSK-AB taper shanks that are manufactured to the middle of their tolerance ranges. As the dimensions of these balancing measures depend on this condition, tolerances have not been defined. For example, the unbalance compensation of a mounted data chip (assumed data chip mass 700 mg) depends on diameter d_1 (tolerance h10) of the HSK taper shank flange.

The shape of the balancing measures can be chosen freely to the manufacturer's discretion, but within the proposed areas. If the theoretical dimensions in Table 1 are to be modified by the manufacturer's discretion, the stability as well as the functionality shall not be negatively affected.

NOTE All balancing bore holes marked with the suffix superscript "[a]" are only required with a mounted data chip.

© ISO 2023 – All rights reserved
Documents
Document Sharing Hub
Full document details: BS ISO 12164-1:2023

4.2.2.2 HSK-AB 25

Figure 2 is applied to HSK-AB 25 only.

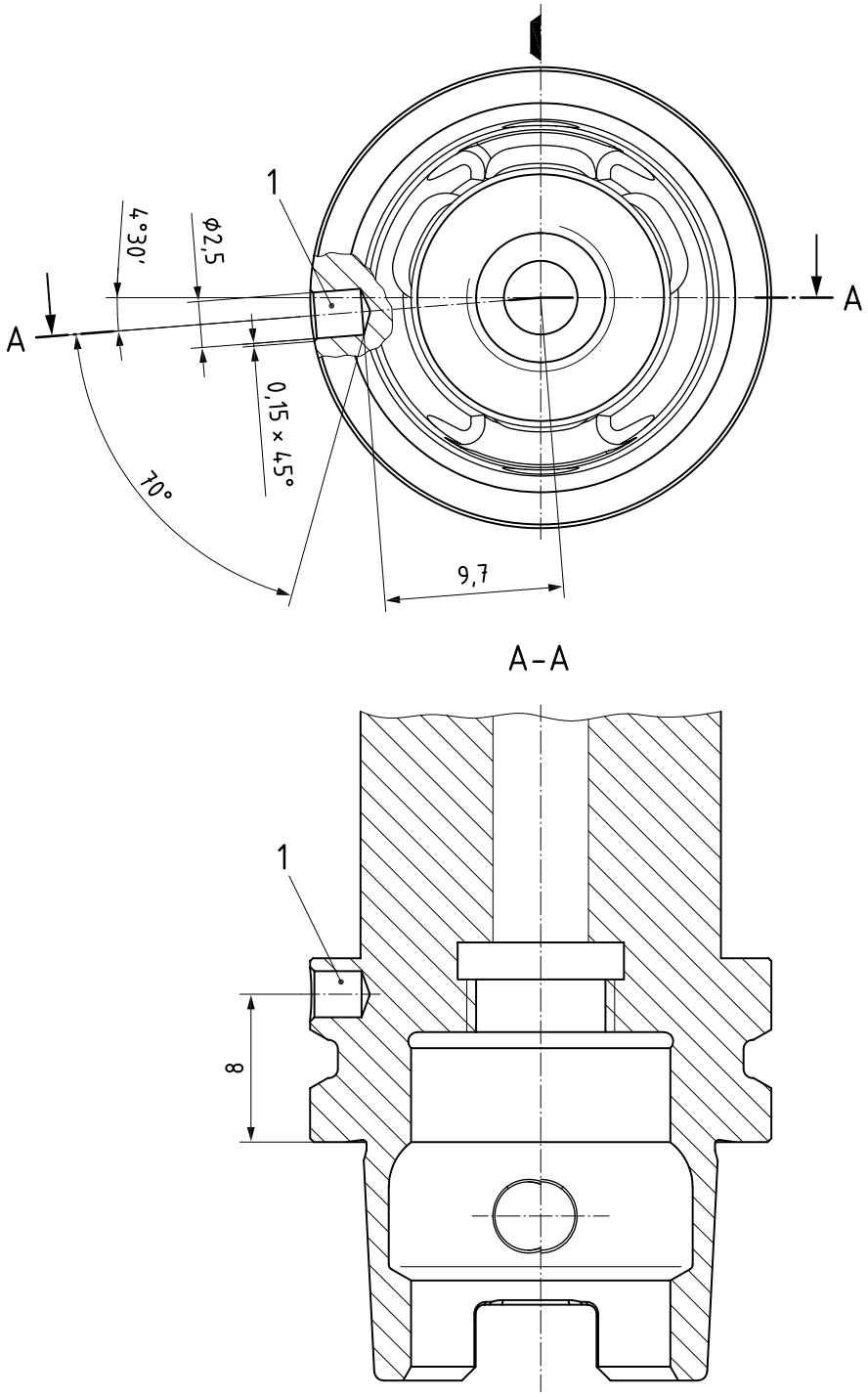

a) HSK-AB 25 side view and section A-A

© ISO 2023 – All rights reserved

Documents
Document Sharing Hub
Full document details: BS ISO 12164-1:2023

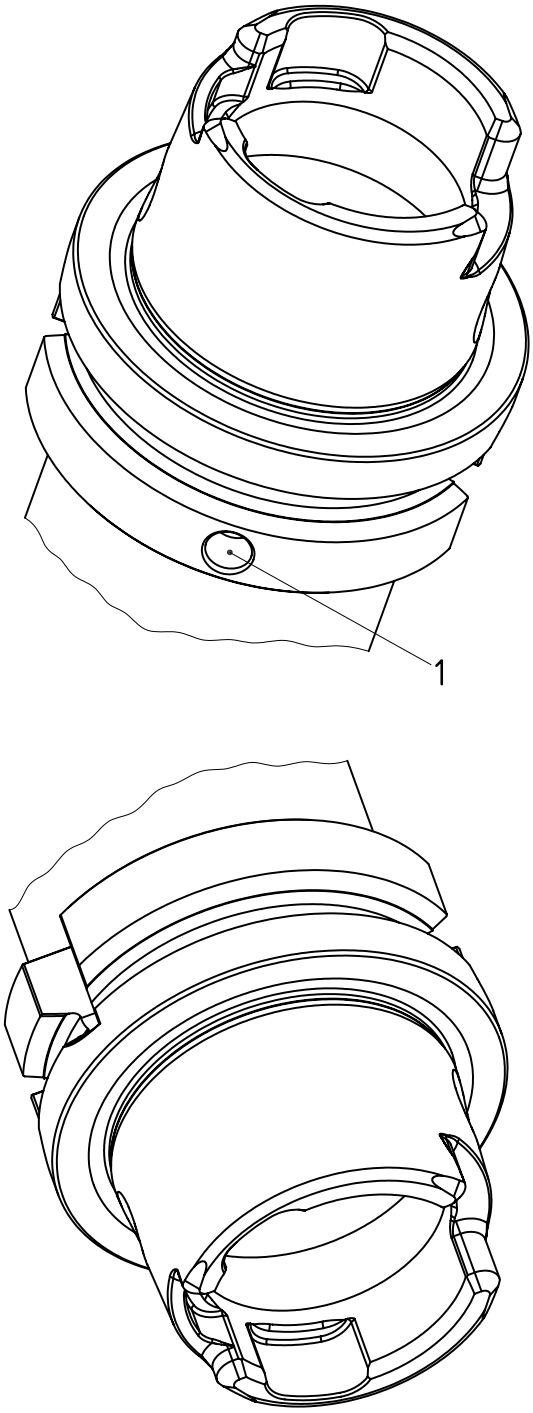

b) HSK-AB 25 position of balancing bore hole

Key

1 balancing bore hole

Figure 2 — HSK-AB 25

© ISO 2023 – All rights reserved

Documents
Document Sharing Hub
Full document details: BS ISO 12164-1:2023