BS ISO 12164-3:2023

BSI Standards Publication

Hollow taper interface with flange contact surface

Part 3: Shanks of types T, TA and U

Documents
Document Sharing Hub

Full document details: BS ISO 12164-3:2023

National foreword

This British Standard is the UK implementation of ISO 12164-3:2023. It supersedes BS ISO 12164-3:2014, which is withdrawn.

The UK participation in its preparation was entrusted to Technical Committee W/-, Consumer Products and Services Sector Policy and Strategy Committee.

A list of organizations represented on this committee can be obtained on request to its committee manager.

Contractual and legal considerations

This publication has been prepared in good faith, however no representation, warranty, assurance or undertaking (express or implied) is or will be made, and no responsibility or liability is or will be accepted by BSI in relation to the adequacy, accuracy, completeness or reasonableness of this publication. All and any such responsibility and liability is expressly disclaimed to the full extent permitted by the law.

This publication is provided as is, and is to be used at the recipient's own risk.

The recipient is advised to consider seeking professional guidance with respect to its use of this publication.

This publication is not intended to constitute a contract. Users are responsible for its correct application.

© The British Standards Institution 2023
Published by BSI Standards Limited 2023

ISBN 978 0 539 05460 6

ICS 25.060.20

Compliance with a British Standard cannot confer immunity from legal obligations.

This British Standard was published under the authority of the Standards Policy and Strategy Committee on 31 October 2023.

Amendments/corrigenda issued since publication

Date	Text affected

Documents
Document Sharing Hub

Full document details: BS ISO 12164-3:2023

INTERNATIONAL STANDARD

ISO 12164-3

Third edition
2023-10

Hollow taper interface with flange contact surface —

Part 3: Shanks of types T, TA and U

Interfaces à cône creux-face —

Partie 3: Queues de type T, TA et U

Reference number
ISO 12164-3:2023(E)

Documents
Document Sharing Hub
© ISO 2023

Full document details: BS ISO 12164-3:2023

COPYRIGHT PROTECTED DOCUMENT

© ISO 2023

All rights reserved. Unless otherwise specified, or required in the context of its implementation, no part of this publication may be reproduced or utilized otherwise in any form or by any means, electronic or mechanical, including photocopying, or posting on the internet or an intranet, without prior written permission. Permission can be requested from either ISO at the address below or ISO's member body in the country of the requester.

ISO copyright office
CP 401 • Ch. de Blandonnet 8
CH-1214 Vernier, Geneva
Phone: +41 22 749 01 11
Email: copyright@iso.org
Website: www.iso.org

Published in Switzerland

© ISO 2023 – All rights reserved

Documents
Document Sharing Hub

Full document details: BS ISO 12164-3:2023

Contents

Page

Foreword ... **iv**

1 Scope ... **1**

2 Normative references ... **1**

3 Terms and definitions ... **1**

4 Hollow taper shanks, types and dimensions ... **1**
- 4.1 General ... 1
- 4.2 Hollow taper shank of type T ... 2
- 4.3 Hollow taper shank of type TA ... 5
- 4.4 Hollow taper shank of type U ... 5
- 4.5 Dimensions ... 6

5 Balancing ... **11**

6 Design ... **11**
- 6.1 HSK sizes and types ... 11
- 6.2 Medium-transfer units ... 11
- 6.3 Clamping forces ... 12
- 6.4 Material and heat treatment ... 12

7 Designation ... **12**

Annex A (informative) **Clamping forces for shanks of types T, TA and U** ... **13**

Annex B (informative) **Hollow taper shank of type U with medium-transfer unit** ... **14**

Annex C (informative) **Overview of all different types of shanks** ... **15**

Bibliography ... **16**

© ISO 2023 – All rights reserved

Documents
Document Sharing Hub

Full document details: BS ISO 12164-3:2023

Foreword

ISO (the International Organization for Standardization) is a worldwide federation of national standards bodies (ISO member bodies). The work of preparing International Standards is normally carried out through ISO technical committees. Each member body interested in a subject for which a technical committee has been established has the right to be represented on that committee. International organizations, governmental and non-governmental, in liaison with ISO, also take part in the work. ISO collaborates closely with the International Electrotechnical Commission (IEC) on all matters of electrotechnical standardization.

The procedures used to develop this document and those intended for its further maintenance are described in the ISO/IEC Directives, Part 1. In particular, the different approval criteria needed for the different types of ISO document should be noted. This document was drafted in accordance with the editorial rules of the ISO/IEC Directives, Part 2 (see www.iso.org/directives).

ISO draws attention to the possibility that the implementation of this document may involve the use of (a) patent(s). ISO takes no position concerning the evidence, validity or applicability of any claimed patent rights in respect thereof. As of the date of publication of this document, ISO had not received notice of (a) patent(s) which may be required to implement this document. However, implementers are cautioned that this may not represent the latest information, which may be obtained from the patent database available at www.iso.org/patents. ISO shall not be held responsible for identifying any or all such patent rights.

Any trade name used in this document is information given for the convenience of users and does not constitute an endorsement.

For an explanation of the voluntary nature of standards, the meaning of ISO specific terms and expressions related to conformity assessment, as well as information about ISO's adherence to the World Trade Organization (WTO) principles in the Technical Barriers to Trade (TBT), see www.iso.org/iso/foreword.html.

This document was prepared by Technical Committee ISO/TC 29, *Small tools,* Subcommittee SC 9*, Tools with defined cutting edges, holding tools, cutting items, adaptive items and interfaces*.

This third edition cancels and replaces the second edition (ISO 12164-3:2014), which has been technically revised.

The main changes are as follows:

— new hollow taper shank of type TA with peripherally grooved flange collar for automatic tool change added, with similar geometry as type A;

— some editorial changes.

A list of all parts of the ISO 12164 series can be found on the ISO website.

Any feedback or questions on this document should be directed to the user's national standards body. A complete listing of these bodies can be found at www.iso.org/members.html.

© ISO 2023 – All rights reserved
Documents
Document Sharing Hub
Full document details: BS ISO 12164-3:2023

Hollow taper interface with flange contact surface —

Part 3: Shanks of types T, TA and U

1 Scope

This document specifies the dimensions for hollow taper shanks with flange contact surface (HSK). These shanks are the male part of the interface to the machine tools (e.g. milling/drilling, turning and grinding machines).

This document specifies three types of shanks:

— type T has a peripherally grooved flange for automatic tool change in turning machines with a gripper for HSK type T;

— type TA has a peripherally grooved flange for automatic tool change in milling machines, enabled (designed) for turning, with a gripper for HSK type A or AB;

— type U has no peripheral groove flange and is designed for manual tool change in turning machines.

HSK types T and TA can also be changed manually via radial access bore holes in the hollow shank taper.

2 Normative references

The following documents are referred to in the text in such a way that some or all of their content constitutes requirements of this document. For dated references, only the edition cited applies. For undated references, the latest edition of the referenced document (including any amendments) applies.

ISO 2768-1, *General tolerances — Part 1: Tolerances for linear and angular dimensions without individual tolerance indications*

3 Terms and definitions

No terms and definitions are listed in this document.

ISO and IEC maintain terminology databases for use in standardization at the following addresses:

— ISO Online browsing platform: available at https://www.iso.org/obp

— IEC Electropedia: available at https://www.electropedia.org/

4 Hollow taper shanks, types and dimensions

4.1 General

All dimensions of the different hollow taper shank sizes with flange contact surface (also called “HSK” or “HSK shank” in this document) are specified in Figure 1 for type T, Figure 2 for type TA and Figure 3 for type U. Table 1 provides the parameters of all types and sizes.

Preferred zones for balancing measures are specified in Clause 5.

Clamping forces for HSK shanks of types T, TA and U are provided in Annex A.

Documents
Document Sharing Hub

© ISO 2023 – All rights reserved

Full document details: BS ISO 12164-3:2023

Hollow taper shanks of types U with medium - transfer unit are provided in Annex B.

An overview of all different types of shanks are provided in Annex C.

Tolerancing of form, orientation, location and run-out correspond to ISO 1101. Dimensions and tolerances of cones are according to ISO 3040. Tolerances not specified shall be of tolerance class “m” in accordance with ISO 2768-1.

4.2 Hollow taper shank of type T

Figure 1 and Table 1 show all general parameters and values of the different HSK-T sizes.

In case of balancing bore holes at the HSK shank flange, mechanical restrictions of known automatic tool changing systems shall be taken into account.

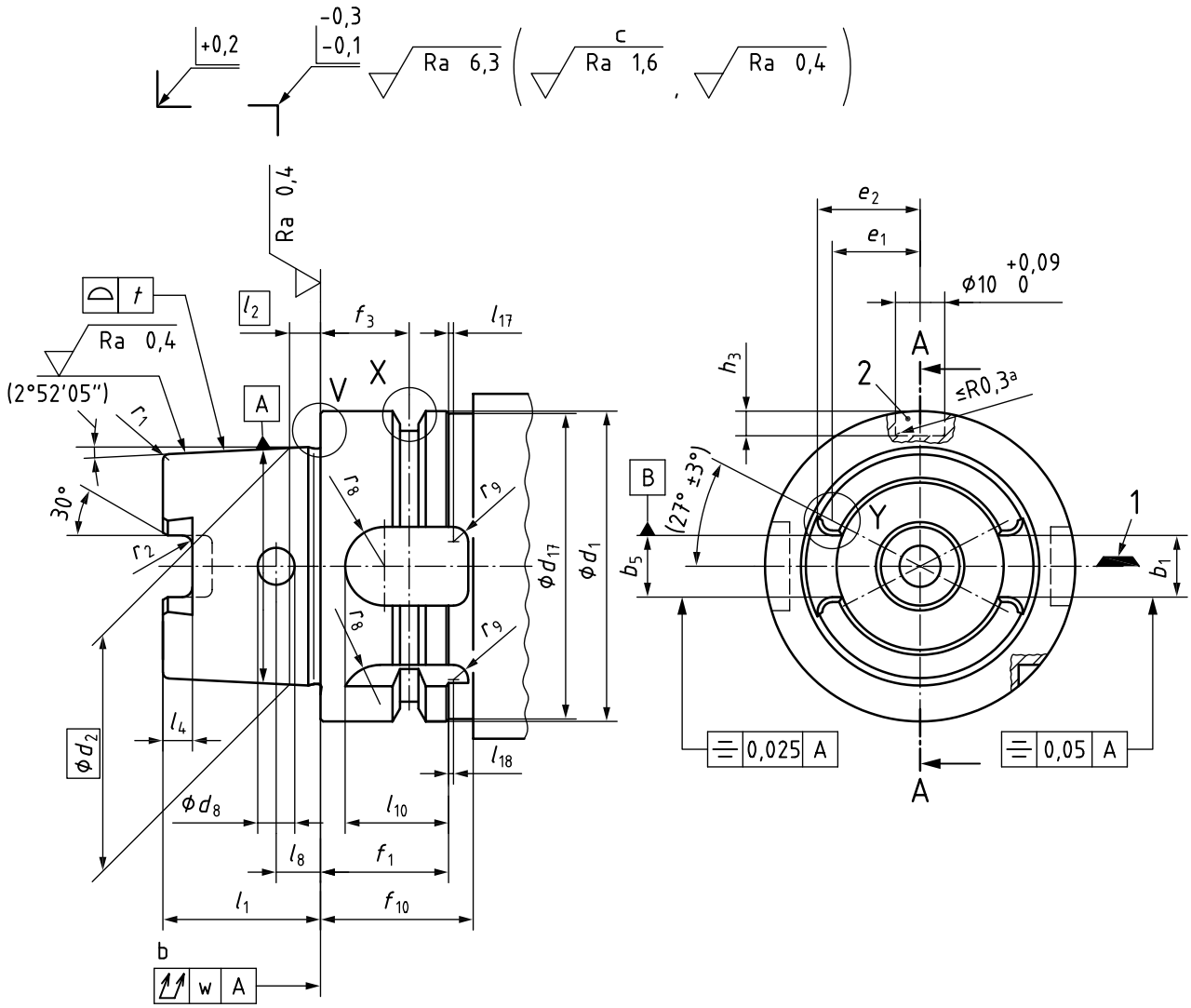

a) HSK-T main and side view

© ISO 2023 – All rights reserved

Documents
Document Sharing Hub
Full document details: BS ISO 12164-3:2023