BS ISO 12242:2012

BSI Standards Publication

# Measurement of fluid flow in closed conduits — Ultrasonic transit-time meters for liquid

NO COPYING WITHOUT BSI PERMISSION EXCEPT AS PERMITTED BY COPYRIGHT LAW

*raising standards worldwide*™

Full document details: BS ISO 12242:2012

## National foreword

This British Standard is the UK implementation of ISO 12242:2012.

The UK participation in its preparation was entrusted to Technical Committee CPI/30/5, Velocity and Mass Methods.

A list of organizations represented on this committee can be obtained on request to its secretary.

This publication does not purport to include all the necessary provisions of a contract. Users are responsible for its correct application.

© The British Standards Institution 2012. Published by BSI Standards Limited 2012

ISBN 978 0 580 70392 8

ICS 17.120.10

**Compliance with a British Standard cannot confer immunity from legal obligations.**

This British Standard was published under the authority of the Standards Policy and Strategy Committee on 31 July 2012.

**Amendments issued since publication**

| Date | Text affected |
|---|---|

Documents
Document Sharing Hub

Full document details: BS ISO 12242:2012

# INTERNATIONAL STANDARD

# ISO 12242

First edition
2012-07-01

# Measurement of fluid flow in closed conduits — Ultrasonic transit-time meters for liquid

*Mesurage de débit des fluides dans les conduites fermées — Compteurs ultrasoniques pour liquides*

Reference number
ISO 12242:2012(E)

Documents
Document Sharing Hub

© ISO 2012

Full document details: BS ISO 12242:2012

**COPYRIGHT PROTECTED DOCUMENT**

© ISO 2012

All rights reserved. Unless otherwise specified, no part of this publication may be reproduced or utilized in any form or by any means, electronic or mechanical, including photocopying and microfilm, without permission in writing from either ISO at the address below or ISO's member body in the country of the requester.

ISO copyright office
Case postale 56 • CH-1211 Geneva 20
Tel. + 41 22 749 01 11
Fax + 41 22 749 09 47
E-mail copyright@iso.org
Web www.iso.org

Published in Switzerland



© ISO 2012 – All rights reserved

Documents
Document Sharing Hub

Full document details: BS ISO 12242:2012

# Contents

Page

**Foreword** ... v

**Introduction** ... vi

**1 Scope** ... 1

**2 Normative references** ... 1

**3 Terms and definitions** ... 1
3.1 Quantities ... 1
3.2 Meter design ... 2
3.3 Thermodynamic conditions ... 3
3.4 Statistics ... 3
3.5 Calibration ... 5
3.6 Symbols and subscripts ... 5
3.7 Abbreviated terms ... 7

**4 Principles of measurement** ... 7
4.1 Description ... 7
4.2 Volume flow ... 9
4.3 Generic description ... 10
4.4 Time delay considerations ... 11
4.5 Refraction considerations ... 14
4.6 Reynolds number ... 15
4.7 Temperature and pressure correction ... 15

**5 Performance requirements** ... 15

**6 Uncertainty in measurement** ... 16
6.1 Introduction ... 16
6.2 Evaluation of the uncertainty components ... 16

**7 Installation** ... 18
7.1 General ... 18
7.2 Use of a prover ... 19
7.3 Calibration in a laboratory or use of a theoretical prediction procedure ... 19
7.4 Additional installation effects ... 21

**8 Test and calibration** ... 22
8.1 General ... 22
8.2 Individual testing — Use of a theoretical prediction procedure ... 22
8.3 Individual testing — Flow calibration under flowing conditions ... 23

**9 Performance testing** ... 24
9.1 Introduction ... 24
9.2 Repeatability and reproducibility ... 25
9.3 Additional test for meters with externally mounted transducers ... 25
9.4 Assessing the uncertainty of a meter whose performance is predicted using a theoretical prediction procedure ... 26
9.5 Fluid-mechanical installation conditions ... 26
9.6 Path failure simulation and exchange of components ... 27

**10 Meter characteristics** ... 27
10.1 Meter body, materials, and construction ... 27
10.2 Transducers ... 29
10.3 Electronics ... 29
10.4 Software ... 30
10.5 Exchange of components ... 31
10.6 Determination of density and temperature ... 31

**11 Operational practice** ... 32
11.1 General ... 32

© ISO 2012 – All rights reserved


AVA Documents
Document Sharing Hub

Full document details: BS ISO 12242:2012

**11.2 Audit process** ... 32
**11.3 Operational diagnostics** ... 34
**11.4 Audit trail during operation; inter-comparison and inspection** ... 36
**11.5 Recalibration** ... 37

**Annex A** (normative) **Temperature and pressure correction** ... 42

**Annex B** (informative) **Effect of a change of roughness** ... 48

**Annex C** (informative) **Example of uncertainty calculations** ... 52

**Annex D** (informative) **Documents** ... 65

**Bibliography** ... 67


© ISO 2012 – All rights reserved

Documents
Document Sharing Hub

Full document details: BS ISO 12242:2012

# Foreword

ISO (the International Organization for Standardization) is a worldwide federation of national standards bodies (ISO member bodies). The work of preparing International Standards is normally carried out through ISO technical committees. Each member body interested in a subject for which a technical committee has been established has the right to be represented on that committee. International organizations, governmental and non-governmental, in liaison with ISO, also take part in the work. ISO collaborates closely with the International Electrotechnical Commission (IEC) on all matters of electrotechnical standardization.

International Standards are drafted in accordance with the rules given in the ISO/IEC Directives, Part 2.

The main task of technical committees is to prepare International Standards. Draft International Standards adopted by the technical committees are circulated to the member bodies for voting. Publication as an International Standard requires approval by at least 75 % of the member bodies casting a vote.

Attention is drawn to the possibility that some of the elements of this document may be the subject of patent rights. ISO shall not be held responsible for identifying any or all such patent rights.

ISO 12242 was prepared by Technical Committee ISO/TC 30, *Measurement of fluid flow in closed conduits*, Subcommittee SC 5, *Velocity and mass methods*.

© ISO 2012 – All rights reserved

Documents
Document Sharing Hub
Full document details: BS ISO 12242:2012

# Introduction

Ultrasonic meters (USMs) have become one of the accepted flow measurement technologies for a wide range of liquid applications, including custody-transfer and allocation measurement. Ultrasonic technology has inherent features such as no pressure loss and wide rangeability.

USMs can deliver diagnostic information through which it may be possible to demonstrate that an ultrasonic liquid flowmeter is performing in accordance with specification. Owing to the extended diagnostic capabilities, this International Standard advocates the addition and use of automated diagnostics instead of labour-intensive quality checks. The use of automated diagnostics makes possible a condition-based maintenance system.


© ISO 2012 – All rights reserved
Documents
Document Sharing Hub
Full document details: BS ISO 12242:2012

INTERNATIONAL STANDARD ISO 12242:2012(E)

# Measurement of fluid flow in closed conduits — Ultrasonic transit-time meters for liquid

## 1 Scope

This International Standard specifies requirements and recommendations for ultrasonic liquid flowmeters, which utilize the transit time of ultrasonic signals to measure the flow of single-phase homogenous liquids in closed conduits.

There are no limits on the minimum or maximum sizes of the meter.

This International Standard specifies performance, calibration and output characteristics of ultrasonic meters (USMs) for liquid flow measurement and deals with installation conditions. It covers installation with and without a dedicated proving (calibration) system. It covers both in-line and clamp-on transducers (used in configurations in which the beam is non-refracted and in those in which it is refracted). Included are both meters incorporating meter bodies and meters with field-mounted transducers.

## 2 Normative references

The following referenced documents are indispensable for the application of this document. For dated references, only the edition cited applies. For undated references, the latest edition of the referenced document (including any amendments) applies.

ISO 4006, *Measurement of fluid flow in closed conduits — Vocabulary and symbols*

## 3 Terms and definitions

For the purposes of this document, the terms and definitions given in ISO 4006 and the following apply.

### 3.1 Quantities

**3.1.1**
**volume flowrate**
$q_V$

$$q_V = \frac{\mathrm{d}V}{\mathrm{d}t}$$

where

$V$ is volume;

$t$ is time

NOTE Adapted from ISO 80000-4:2006,[42] 4-30.

**3.1.2**
**metering pressure**
absolute fluid pressure in a meter under flowing conditions to which the indicated volume of liquid is related

**3.1.3**
**mean velocity in the meter body**
$v$
fluid flowrate divided by the cross-sectional area of the meter body

© ISO 2012 – All rights reserved



Documents
Document Sharing Hub
Full document details: BS ISO 12242:2012

**3.1.4**
**mean pipe velocity**
$v_p$
fluid flowrate divided by the cross-sectional area of the upstream pipe

NOTE Where a meter has a reduced bore, the mean velocities in the upstream pipe and within the meter body itself differ.

**3.1.5**
**path velocity**
average fluid velocity on an ultrasonic path

**3.1.6**
**Reynolds number**
dimensionless parameter expressing the ratio between the inertia and viscous forces

**3.1.7**
**pipe Reynolds number**
$Re_D$
dimensionless parameter expressing the ratio between the inertia and viscous forces in the pipe

$$Re_D = \frac{\rho v_p D}{\mu} = \frac{v_p D}{\nu_{kv}}$$

where

$\rho$ is mass density;

$v_p$ is the mean pipe velocity;

$D$ is the pipe internal diameter;

$\mu$ is the dynamic viscosity;

$\nu_{kv}$ is the kinematic viscosity

NOTE Where a meter has a reduced bore, it is possible also to define the throat Reynolds number, in whose definition the mean velocity in the meter body, the meter internal diameter and the kinematic viscosity are used.

## 3.2 Meter design

**3.2.1**
**meter body**
pressure-containing structure of the meter

**3.2.2**
**ultrasonic path**
path travelled by an ultrasonic signal between a pair of ultrasonic transducers

**3.2.3**
**axial path**
path travelled by an ultrasonic signal either on or parallel to the axis of the pipe

**3.2.4**
**diametrical path**
ultrasonic path whereby the ultrasonic signal travels through the centre-line or long axis of the pipe

**3.2.5**
**chordal path**
ultrasonic path whereby the ultrasonic signal travels parallel to the diametrical path


© ISO 2012 – All rights reserved
Documents
Document Sharing Hub
Full document details: BS ISO 12242:2012

**3.2.6**
**field mounted**
external to the pipe, attached on site, not prior to a laboratory calibration

## 3.3 Thermodynamic conditions

**3.3.1**
**metering conditions**
conditions, at the point of measurement, of the fluid of which the volume is to be measured

NOTE Also known as operating conditions or actual conditions.

**3.3.2**
**standard conditions**
defined temperature and pressure conditions used in the measurement of fluid quantity so that the standard volume is the volume that would be occupied by a quantity of fluid if it were at standard temperature and pressure

NOTE 1 Standard conditions may be defined by regulation or contract.

NOTE 2 Not preferred alternatives: reference conditions, base conditions, normal conditions, etc.

NOTE 3 Metering and standard conditions relate only to the volume of the liquid to be measured or indicated, and should not be confused with rated operating conditions or reference conditions (see ISO/IEC Guide 99:2007,[44] 4.9 and 4.11), which refer to influence quantities (see ISO/IEC Guide 99:2007,[44] 2.52).

**3.3.3**
**specified conditions**
conditions of the fluid at which performance specifications of the meter are given

## 3.4 Statistics

**3.4.1**
**error**
measured quantity value minus a reference quantity value

[ISO/IEC Guide 99:2007,[44] 2.16]

**3.4.2**
**repeatability (of results of measurements)**
closeness of the agreement between the results of successive measurements of the same measurand carried out under the same conditions of measurement

NOTE 1 These conditions are called repeatability conditions.

NOTE 2 Repeatability conditions include:

— the same measurement procedure;

— the same observer;

— the same measuring instrument, used under the same conditions;

— the same location;

— repetition over a short period of time.

NOTE 3 Repeatability may be expressed quantitatively in terms of the dispersion characteristics of the results.

[ISO/IEC Guide 98-3:2008,[43] B.2.15]

© ISO 2012 – All rights reserved

Documents
Document Sharing Hub
Full document details: BS ISO 12242:2012

**3.4.3**
**reproducibility (of results of measurements)**
closeness of the agreement between the results of measurements of the same measurand carried out under changed conditions of measurement

NOTE 1 A valid statement of reproducibility requires specification of the conditions changed.

NOTE 2 The changed conditions may include:

— principle of measurement;

— method of measurement;

— observer;

— measuring instrument;

— reference standard;

— location;

— conditions of use;

— time.

NOTE 3 Reproducibility may be expressed quantitatively in terms of the dispersion characteristics of the results.

NOTE 4 Results are here usually understood to be corrected results.

[ISO/IEC Guide 98-3:2008,[43] B.2.16]

**3.4.4**
**resolution**
smallest difference between indications of a meter that can be meaningfully distinguished

**3.4.5**
**zero flow reading**
flowmeter reading when the liquid is at rest, i.e. both axial and non-axial velocity components are essentially zero

**3.4.6**
**linearization**
way of reducing the non-linearity of an ultrasonic meter, by applying correction factors

NOTE The linearization can be applied in the electronics of the meter or in a flow computer connected to the USM. The correction can be, for example, piece-wise linearization or polynomial linearization.

**3.4.7**
**uncertainty (of measurement)**
parameter, associated with the result of a measurement, that characterizes the dispersion of the values that could reasonably be attributed to the measurand

NOTE 1 The parameter may be, for example, a standard deviation (or a given multiple of it), or the half-width of an interval having a stated level of confidence.

NOTE 2 Uncertainty of measurement comprises, in general, many components. Some of these components may be evaluated from the statistical distribution of the results of series of measurements and can be characterized by experimental standard deviations. The other components, which can also be characterized by standard deviations, are evaluated from assumed probability distributions based on experience or other information.

NOTE 3 It is understood that the result of the measurement is the best estimate of the value of the measurand, and that all components of uncertainty, including those arising from systematic effects, such as components associated with corrections and reference standards, contribute to the dispersion.

[ISO/IEC Guide 98-3:2008,[43] B.2.18]


© ISO 2012 – All rights reserved
Documents
Document Sharing Hub
Full document details: BS ISO 12242:2012

**3.4.8**
**standard uncertainty**
$u$
uncertainty of the result of a measurement expressed as a standard deviation

[ISO/IEC Guide 98-3:2008,[43] 2.3.1]

**3.4.9**
**expanded uncertainty**
$U$
quantity defining an interval about the result of a measurement that may be expected to encompass a large fraction of the distribution of values that could reasonably be attributed to the measurand

[ISO/IEC Guide 98-3:2008,[43] 2.3.5]

NOTE 1 The large fraction is normally 95 % and is generally associated with a coverage factor $k = 2$.

NOTE 2 The expanded uncertainty is often referred to as the uncertainty.

**3.4.10**
**coverage factor**
numerical factor used as a multiplier of the standard uncertainty in order to obtain an expanded uncertainty

NOTE Adapted from ISO/IEC Guide 98-3:2008,[43] 2.3.6.

## 3.5 Calibration

**3.5.1**
**flow calibration**
calibration in which fluid flows through the meter

**3.5.2**
**theoretical prediction procedure**
procedure by which the performance of a meter is theoretically predicted, without liquid flowing through the meter

**3.5.3**
**performance testing**
testing of a representative sample of meters to determine, for example, reproducibility and installation requirements for meters geometrically similar to themselves

## 3.6 Symbols and subscripts

The symbols and subscripts used in this International Standard are given in Tables 1 and 2.

© ISO 2012 – All rights reserved

Documents
Document Sharing Hub
Full document details: BS ISO 12242:2012

**Table 1 — Symbols**

| Quantity | Symbol | Dimensions[a] | SI unit |
|---|---|---|---|
| Cross-sectional area of meter body | $A$ | $L^2$ | $m^2$ |
| Speed of sound in fluid | $c$ | $LT^{-1}$ | m/s |
| Internal diameter of the meter body | $d$ | L | m |
| Internal pipe diameter | $D$ | L | m |
| Young's modulus | $E$ | $ML^{-1}T^{-2}$ | Pa |
| Function of path velocities | $f$ | — | 1 |
| Integers (1,2,3, …) | $i,j,n$ | — | 1 |
| Calibration factor | $K$ | — | 1 |
| Body end correction factor | $K_E$ | — | 1 |
| Path-geometry factor | $K_g$ | $L^b$ or $LT^{-1}$ [c] | $m^b$ or m/s [c] |
| Velocity profile correction factor | $K_p$ | — | 1 |
| Body style correction factor | $K_S$ | — | 1 |
| Minimum distance to a specified upstream flow disturbance | $l_{min}$ | L | m |
| Path length | $l_p$ | L | m |
| Absolute pressure | $p$ | $ML^{-1}T^{-2}$ | Pa |
| Volume flowrate | $q_V$ | $L^3T^{-1}$ | $m^3/s$ |
| Internal pipe radius | $r$ | L | m |
| External pipe radius | $R$ | L | m |
| Throat Reynolds number | $Re_d$ | — | 1 |
| Pipe Reynolds number | $Re_D$ | — | 1 |
| Percentage maximum deviation in measured flowrate due to upstream fittings | $S$ | — | 1 |
| Absolute temperature of the liquid | $T$ | $\Theta$ | K |
| Transit time | $t$ | T | s |
| Time delay | $t_0$ | T | s |
| Mean axial fluid velocity in the meter body | $v$ | $LT^{-1}$ | m/s |
| Mean axial fluid velocity on ultrasonic path, $i$ | $v_i$ | $LT^{-1}$ | m/s |
| Mean axial fluid velocity in the upstream pipe | $v_p$ | $LT^{-1}$ | m/s |
| Transducer axial separation | $X$ | L | m |
| Thermal expansion coefficient | $\alpha$ | $\Theta^{-1}$ | $K^{-1}$ |
| Pipe wall thickness | $\delta$ | L | m |
| Dynamic viscosity | $\mu$ | $ML^{-1}T^{-1}$ | Pa s |
| Kinematic viscosity | $\nu_{kv}$ | $L^2T^{-1}$ | $m^2/s$ |
| Density of the liquid | $\rho$ | $ML^{-3}$ | $kg/m^3$ |
| Poisson's ratio | $\sigma$ | — | 1 |
| Angle between ultrasonic path and pipe axis | $\phi$ | — | rad |

[a] M ≡ mass; L ≡ length; T ≡ time ; Θ ≡ temperature.

[b] Non-refracting configuration.

[c] Refracting configuration.



© ISO 2012 – All rights reserved

Documents
Document Sharing Hub

Full document details: BS ISO 12242:2012

**Table 2 — Subscripts**

| Subscript | Meaning |
|---|---|
| cal | under calibration conditions |
| meas | measured (uncorrected) |
| op | under operational conditions |
| true | actual (corrected) |

### 3.7 Abbreviated terms

AGC automatic gain control

FAT factory acceptance test

MSOS measured speed of sound

SNR signal to noise ratio

SOS speed of sound

RSOS reference speed of sound

USM ultrasonic meter

USMP USM package, including meter tubes, flow conditioner, flow computer and thermowell

## 4 Principles of measurement

### 4.1 Description

The ultrasonic transit-time flowmeter is a sampling device that measures discrete path velocities using one or more pairs of transducers. Each pair of transducers is located a known distance, $l_p$, apart such that one is upstream of the other (see Figure 1). The upstream and downstream transducers send and receive pulses of ultrasound alternately, referred to as contra-propagating transmission, and the times of arrival are used in the calculation of average axial velocity, $v$. At any given instant, the difference between the apparent speed of sound in a moving liquid and the speed of sound in that same liquid at rest is directly proportional to the instantaneous velocity of the liquid. As a consequence, a measure of the average axial velocity of the liquid along a path can be obtained by transmitting an ultrasonic signal along the path in both directions and subsequently measuring the transit time difference.

The volume flowrate of a liquid flowing in a completely filled closed conduit is defined as the average velocity of the liquid over a cross-section multiplied by the area of the cross-section. Thus, by measuring the average velocity of a liquid along one or more ultrasonic paths (i.e. lines, not the area) and combining the measurements with knowledge of the cross-sectional area and the velocity profile over the cross-section, it is possible to obtain an estimate of the volume flowrate of the liquid in the conduit.

© ISO 2012 – All rights reserved

Documents
Document Sharing Hub
Full document details: BS ISO 12242:2012

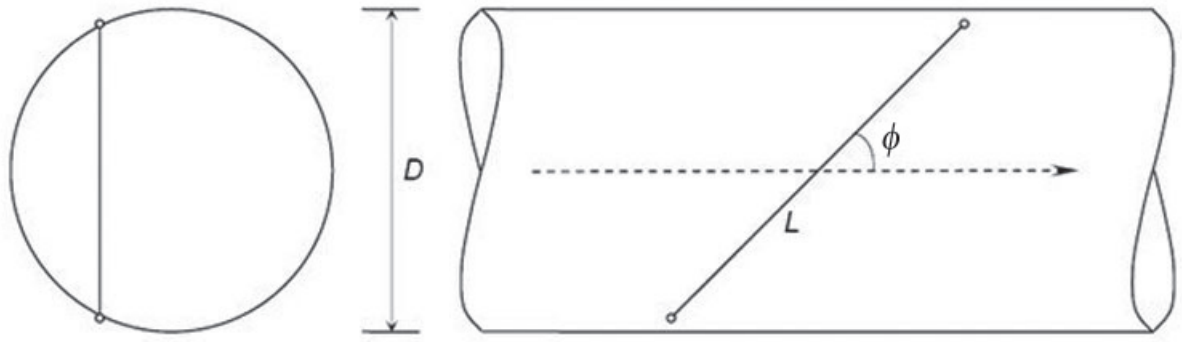


**Figure 1 — Measurement principle**

Several techniques can be used to obtain a measure of the average effective speed of propagation of an ultrasonic signal in a moving liquid in order to determine the average axial flow velocity along an ultrasonic path line. However, the normal technique applied in modern USMs is the direct time differential technique.

The basis of this technique is the measurement of the transit time of ultrasonic signals as they propagate between a transmitter and a receiver. The velocity of propagation of the ultrasonic signal is the sum of the speed of sound, $c$, and the flow velocity in the direction of propagation. Therefore the transit time upstream and downstream can be expressed as:

$$t_{\text{fl_up/dn}} \approx \int_{l=0}^{l_{\text{p}}} \frac{1}{c + \boldsymbol{v}_l \bullet \boldsymbol{n}} . \mathrm{d}l \tag{1}$$

where

$c$ is the speed of sound in the fluid;

$\boldsymbol{n}$ is the unit normal vector to the wave front;

$v_l$ is the flow velocity vector at location, $l$, on the path $l_{\text{p}}$.

NOTE This is correct whether the transmitter is upstream or downstream.

With the assumptions that the flow velocity is in the axial direction only and that $v_i \ll c$, where $v_i$ is the mean axial flow velocity on ultrasonic path line $i$, then the upstream and downstream transit times can be written as

$$t_{\text{fl_up}} = \frac{l_{\text{p}}}{c - v_i \cos\phi} \tag{2}$$

$$t_{\text{fl_dn}} = \frac{l_{\text{p}}}{c + v_i \cos\phi} \tag{3}$$

Rearranging terms and solving for $v_i$ gives

$$\frac{1}{t_{\text{fl_dn}}} - \frac{1}{t_{\text{fl_up}}} = \frac{t_{\text{fl_up}} - t_{\text{fl_dn}}}{t_{\text{fl_up}} t_{\text{fl_dn}}} = \frac{2 v_i \cos\phi}{l_{\text{p}}} \tag{4}$$


© ISO 2012 – All rights reserved
Documents
Document Sharing Hub
Full document details: BS ISO 12242:2012

$$v_i = \frac{l_\mathrm{p}}{2\cos\phi}\frac{\Delta t}{t_\mathrm{fl_up}t_\mathrm{fl_dn}} \tag{5}$$

where

$l_\mathrm{p}$ is the distance between the transducers;

$\Delta t$ is the difference in transit times;

$\phi$ is the angle of inclination of the ultrasonic signal with respect to the axial direction of the flow.

The speed of sound can be calculated as follows:

$$\frac{1}{t_\mathrm{fl_dn}} + \frac{1}{t_\mathrm{fl_up}} = \frac{t_\mathrm{fl_up} + t_\mathrm{fl_dn}}{t_\mathrm{fl_up}t_\mathrm{fl_dn}} = \frac{2c}{l_\mathrm{p}} \tag{6}$$

$$c = \frac{l_\mathrm{p}}{2}\frac{\left(t_\mathrm{fl_up} + t_\mathrm{fl_dn}\right)}{t_\mathrm{fl_up}t_\mathrm{fl_dn}} \tag{7}$$

## 4.2 Volume flow

The individual path velocity measurements are combined by a mathematical function to yield an estimate of the mean velocity in the meter body:

$$v = f(v_1, \ldots, v_n) \tag{8}$$

where $n$ is the total number of paths.

Owing to variations in path configuration and different proprietary approaches of solving Formula (8), even for a given number of paths, the exact form of $f(v_1, \ldots, v_n)$ can vary.

The relationship between the mean pipe velocity and the measured path velocities depends on the flow profile. In fully developed flow, the flow profile depends only on the Reynolds number and the pipe roughness.

One possible solution is to calculate the mean velocity as a weighted sum of the path velocities and to apply a velocity profile factor, $K_\mathrm{p}$, to compensate for profile changes. The value of $K_\mathrm{p}$ is calculated by an algorithm that takes into account flow regime (laminar, transitional, and turbulent), as well as other process variables, as required.

$$v = K_\mathrm{p}\sum_{i=1}^{n} w_i v_i \tag{9}$$

The volume flowrate, $q_V$, is given by:

$$q_V = Av \tag{10}$$

where

$v$ is the estimate of the mean pipe velocity;

$A$ is the cross-sectional area of the measurement section.

Note that increasing $n$ may reduce the uncertainty associated with flow profile variations.

© ISO 2012 – All rights reserved

Documents
Document Sharing Hub
Full document details: BS ISO 12242:2012

## 4.3 Generic description

### 4.3.1 General

This sub-clause is a generic description of USMs for liquids. It recognizes the scope for variation within commercial designs and the potential for new developments. For the purpose of description, USMs are considered to consist of several components, namely:

a) transducers;

b) meter body with ultrasonic path configuration;

c) electronic data processing and presentation unit.

NOTE In a meter with externally mounted transducers, the meter body is the pipe to which the transducers are fixed.

### 4.3.2 Transducers

Transducers are the transmitters and receivers of the ultrasonic signal. They can be supplied in various forms. Typically they comprise a piezoelectric element with electrode connections and a supporting mechanical structure with which the process connection is made.

Typical arrangements are shown in Figures 2 and 3. To measure the axial velocity, the transducer transmits ultrasonic waves at a non-perpendicular angle to the meter body axis in the direction of a second transducer or reflection point in the meter body interior. There are two methods of mounting the transducers:

a) external to the pressure-retaining boundary;

b) internal to the pressure-retaining boundary.

The beam of the USM may be

1) refracted;

2) non-refracted.

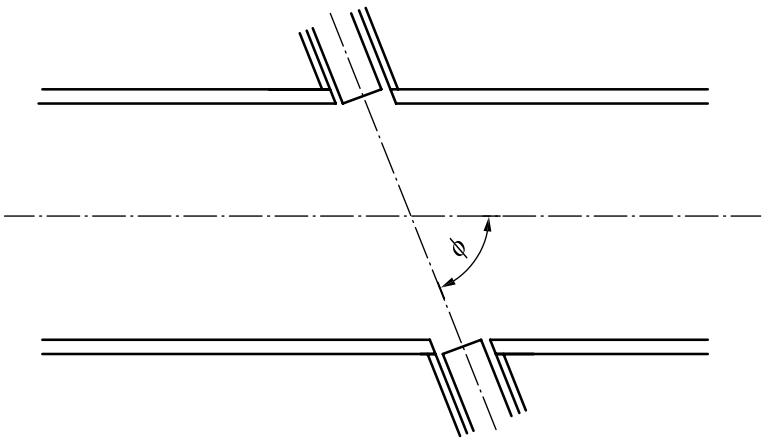


**Figure 2 — Non-refracted configuration**


© ISO 2012 – All rights reserved
Documents
Document Sharing Hub
Full document details: BS ISO 12242:2012

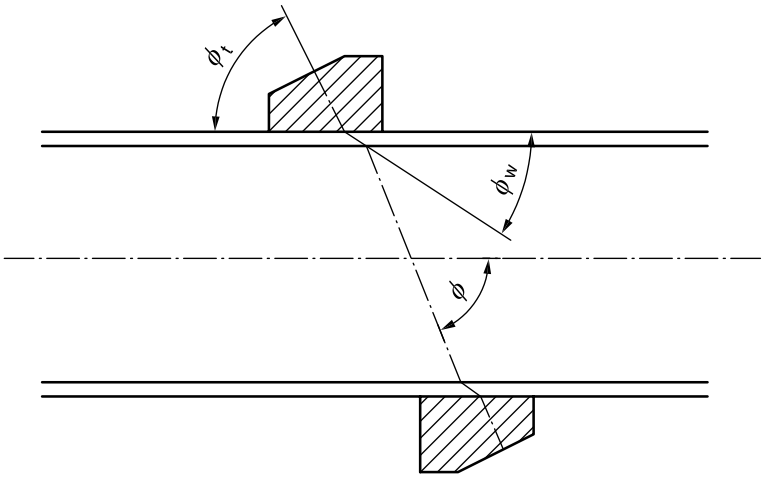


**Figure 3 — Refracted configuration with an external mount**

If the transducers are external to the pipe wall boundary, then the beam is always refracted; this configuration is typically referred to as clamp-on or field mounted. The geometry of a refracted beam is a function of, among other things, the liquid sound velocity (and thus temperature). The beam geometry determines the optimal transducer position. If the transducers are not placed at their optimal position, the measurement uncertainty increases.

If the transducers are internal to the pipe wall boundary, this configuration is typically referred to as in-line; the beam is almost always non-refracted.

#### 4.3.3 Meter body and ultrasonic path configurations

The meter body is essentially a pipe to which the transducers are attached. Temperature and pressure have an effect on the pipe area (see 4.7 and Annex A). In a reduced-bore meter, the area of the measurement section is smaller than that of the pipe.

USMs are available in a variety of path configurations. The numbers of measurement paths are generally chosen based on a requirement with respect to variations in velocity distribution and required accuracy.

As well as variations in the radial position of the measurement paths in the cross-section, the path configuration can be varied in orientation to the pipe axis. By utilizing reflection of the ultrasonic wave from the interior of the meter body or from a fabricated reflector, the path can traverse the cross-section several times.

Some ultrasonic path types are illustrated in Figures 4 and 5. Figure 4 shows examples of single-path meters, Figure 5 examples of multipath meters.

Velocity measurements made on multiple paths are typically less susceptible to changes in flow profile than those made on a single path. Double traverses in a single plane are much less sensitive to non-axial velocity components than single traverse paths. Other configurations, e.g. the triple traverse mid-radius path, may be sensitive to non-axial components but can be used in combination to eliminate or to reduce the effects of swirl and cross-flow. Direct paths can be single, double or crossed.

#### 4.3.4 Time measurement

All USMs contain an electronic part that generates and receives signals and performs time measurement.

### 4.4 Time delay considerations

In 4.1 it is assumed that the ultrasonic signal spends all of the transit time in the fluid and that the direction of propagation is at an angle, $\phi$, to the pipe wall. In a real system, the measured time between the ultrasonic signal

© ISO 2012 – All rights reserved

Documents
Document Sharing Hub
Full document details: BS ISO 12242:2012

leaving the transmitter and being received at the receiver includes a time delay, $t_0$, due to intervening materials, electronics, signal processing, cable lengths, etc.:

$$t_{\text{me_up/dn}} = t_{\text{fl_up/dn}} + t_0 \tag{11}$$

Here it is assumed that the difference between the delay times $t_{0_\text{up}}$ and $t_{0_\text{dn}}$ is small compared with the transit times $t_{\text{me_up/dn}}$. Any difference between $t_{0_\text{up}}$ and $t_{0_\text{dn}}$ results in a zero offset.

Formulae (5) and (7) then take the form

$$v_i = \frac{l_\text{p}}{2\cos\phi}\frac{\Delta t}{(t_{\text{me_up}} - t_0)(t_{\text{me_dn}} - t_0)} \tag{12}$$

$$c = \frac{l_\text{p}}{2}\frac{(t_{\text{me_up}} + t_{\text{me_dn}} - 2t_0)}{(t_{\text{me_up}} - t_0)(t_{\text{me_dn}} - t_0)} \tag{13}$$

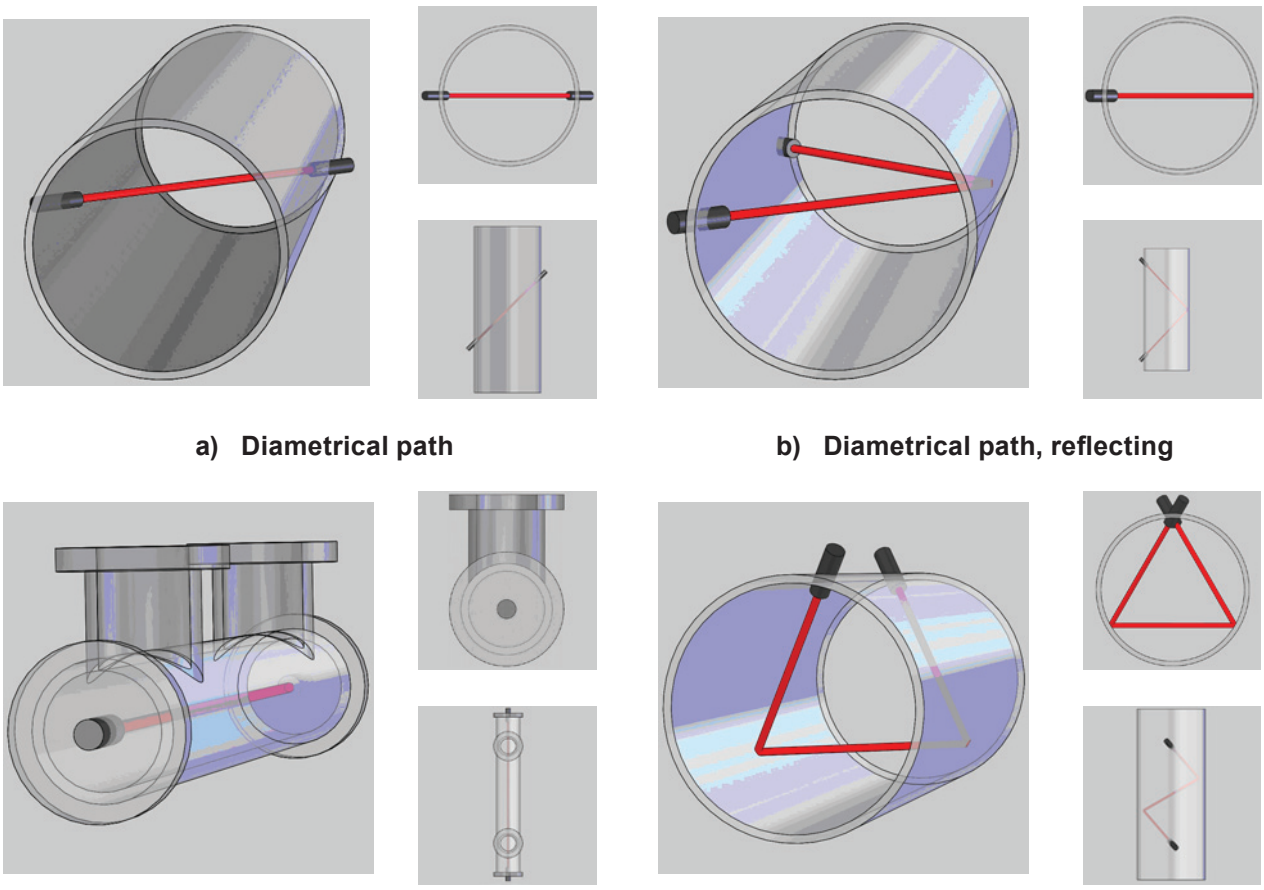

**a) Diametrical path**

**b) Diametrical path, reflecting**

**c) Axial path**

**d) Complex reflecting path**

**Figure 4 — Some Ultrasonic path types for single-path meters**



© ISO 2012 – All rights reserved

Documents
Document Sharing Hub
Full document details: BS ISO 12242:2012

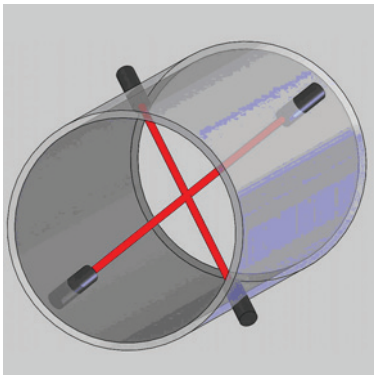
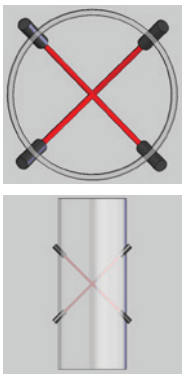

a) Diametrical multipath

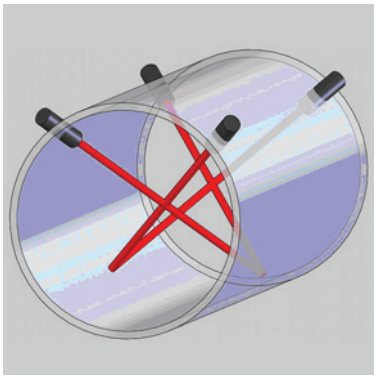
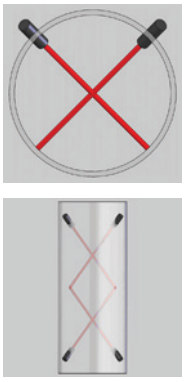

b) Diametrical multipath, reflecting

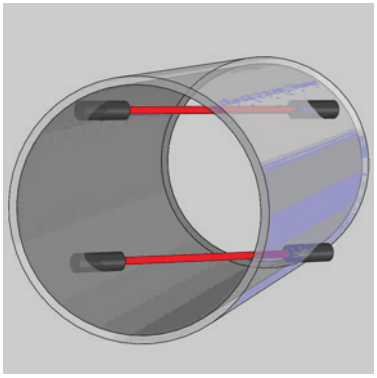
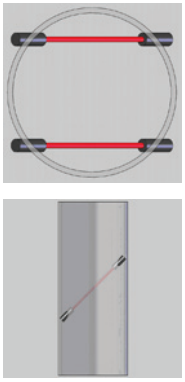

c) Chordal multipath

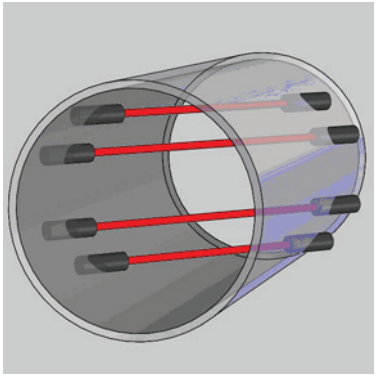
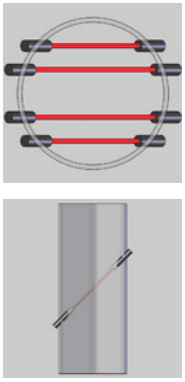

d) Chordal multipath, planar

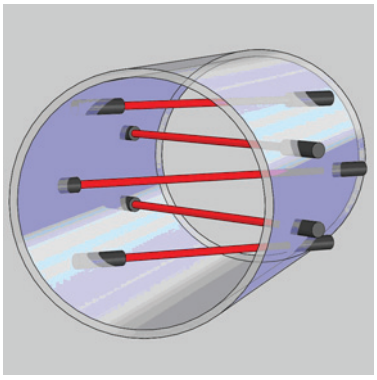
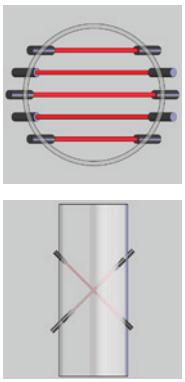

e) Chordal multipath, non-planar

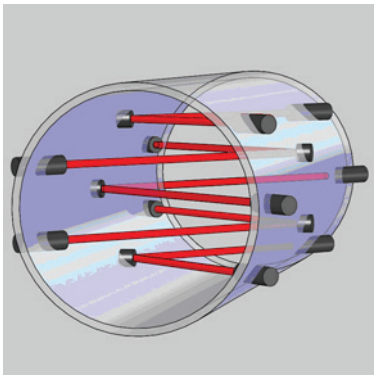
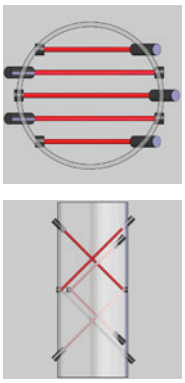

f) Chordal multipath, reflected chords

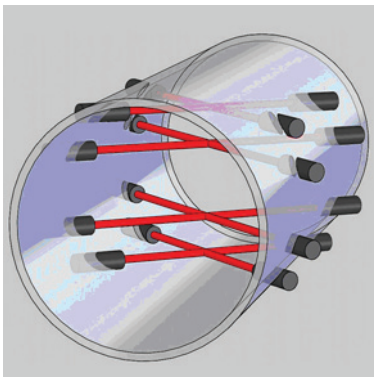
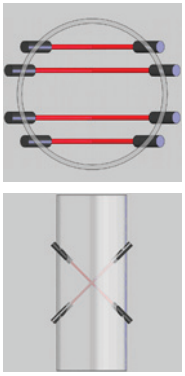

g) Chordal multipath, crossed chords

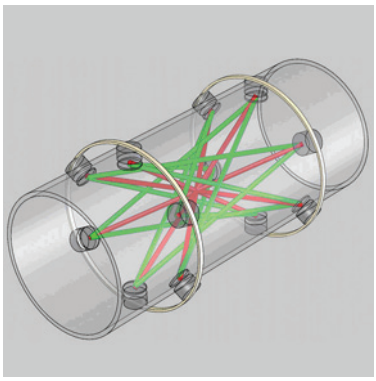
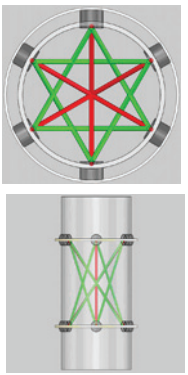

h) Compound multipath

**Figure 5 — Some ultrasonic path types for multipath meters**

© ISO 2012 – All rights reserved



Documents
Document Sharing Hub
Full document details: BS ISO 12242:2012

## 4.5 Refraction considerations

It is necessary for USMs that utilize externally mounted transducer arrangements (see Figure 3) to compensate for refraction in order to operate properly and accurately. When a sound wave passes through an interface between two materials at oblique angles and the materials have different acoustic impedances, both reflected and refracted waves are produced. Sound-wave refraction takes place as the sound passes from the transducer into the pipe wall, from the pipe wall into pipe lining (if present), and from the pipe or pipe lining into the liquid. This is due to the different velocities of the acoustic waves within these materials. With externally mounted transducer arrangements, Formula (5) is usually rearranged into a different form, which is derived in this subclause.

With the definition of the angles according to Figure 3, Snell's law can be expressed as Formula (14):

$$\frac{\cos\phi_{\mathrm{t}}}{c_{\mathrm{t}}} = \frac{\cos\phi_{\mathrm{w}}}{c_{\mathrm{w}}} = \frac{\cos\phi}{c} \tag{14}$$

where

$c_{\mathrm{t}}$ is the speed of sound in the transducer's coupling wedge;

$c_{\mathrm{w}}$ is the speed of sound in the wall;

$c$ is the speed of sound in the liquid.

As a consequence, $\phi$ and $l_{\mathrm{p}}$ in Formulae (5) and (12) become functions of the speeds of sound, $c_{\mathrm{t}}$, $c_{\mathrm{w}}$, and $c$ and hence in general, of the temperature, pressure, and composition of the process fluid and intervening materials.

Using the assumption (already made in 4.1) that the velocity is much smaller than the speed of sound in the fluid, the product of the transit times in the fluid measured upstream and downstream approximately equals the square of the transit time $t_{\mathrm{fl}}$ in the fluid with no flow:

$$t_{\mathrm{fl_up}} t_{\mathrm{fl_dn}} = \left(t_{\mathrm{fl}} + \frac{\Delta t}{2}\right)\left(t_{\mathrm{fl}} - \frac{\Delta t}{2}\right) = t_{\mathrm{fl}}^2 - \frac{\Delta t^2}{4} \approx t_{\mathrm{fl}}^2 \tag{15}$$

Formula (5) becomes:

$$v_i = \frac{l_{\mathrm{p}}}{2\cos\phi}\frac{\Delta t}{t_{\mathrm{fl}}^2} \tag{16}$$

The speed of sound in the fluid can be substituted for the path length and the transit time in the fluid. Then from Formula (14) the speed of sound and angle in the coupling wedge are substituted for the speed of sound and angle in the fluid:

$$v_i = \frac{l_{\mathrm{p}}}{\cos\phi\, t_{\mathrm{fl}}}\frac{\Delta t}{2t_{\mathrm{fl}}} = \frac{c}{\cos\phi}\frac{\Delta t}{2t_{\mathrm{fl}}} = \frac{c_{\mathrm{t}}}{\cos\phi_{\mathrm{t}}}\frac{\Delta t}{2t_{\mathrm{fl}}} \tag{17}$$

The sum of the transit times in the fluid measured upstream and downstream equals twice the transit time in the fluid:

$$v_i = \frac{c_{\mathrm{t}}}{\cos\phi_{\mathrm{t}}}\frac{\Delta t}{t_{\mathrm{fl_up}} + t_{\mathrm{fl_dn}}} \tag{18}$$

Just as in 4.4 the transit times $t_{\mathrm{fl_up}}$ and $t_{\mathrm{fl_dn}}$ in the fluid are replaced by the measured transit times $t_{\mathrm{me_up}}$, $t_{\mathrm{me_dn}}$, and the delay time $t_0$:

$$v_i = \frac{c_{\mathrm{t}}}{\cos\phi_{\mathrm{t}}}\frac{\Delta t}{(t_{\mathrm{me_up}} + t_{\mathrm{me_dn}} - 2t_0)} \tag{19}$$

Thus the measured flow velocity is not directly dependent on the speed of sound in the fluid.


© ISO 2012 – All rights reserved
Documents
Document Sharing Hub
Full document details: BS ISO 12242:2012

### 4.6 Reynolds number

The pipe Reynolds number is given by:

$$Re_D = \frac{v_p D \rho}{\mu} \tag{20}$$

where

$D$ is the internal diameter of the pipe;

$v_p$ is the mean axial liquid velocity in the pipe;

$\rho$ is the actual density;

$\mu$ is the dynamic viscosity.

The effect of the Reynolds number on the uncertainty of a USM is discussed in 6.2.3.

### 4.7 Temperature and pressure correction

During flow calibration, the meter flow calibration factor is determined and applied. Any subsequent change in pressure or temperature from that encountered during the flow calibration alters the physical dimensions of the meter and, if not corrected for, introduces a systematic flow measurement error. In general, the temperature and pressure during calibration are different from those encountered under operating conditions. Temperature and pressure correction is not always necessary for process applications. For many instruments, the influence of pressure and temperature is typically negligible compared with the total uncertainty. For high accuracy applications (e.g. custody transfer) and extreme temperatures or pressures, this may no longer be the case.

In A.1 to A.4, a simple approach is given to allow an initial estimate to be made of the flow error caused by temperature and pressure conditions that differ from the calibration reference condition. If this error is significant relative to the uncertainty required for custody transfer or allocation purposes, a more detailed assessment of flow error has to be performed as described in A.5. ISO 17089-1:2010,[41] Annex E provides an extensive and detailed explanation of the process and readers are advised to consult that document for the background to many of the statements made in Annex A.

## 5 Performance requirements

The selection of the USM depends on its required performance. There are many different applications. The performance is normally specified in terms of uncertainty in measured volume flowrate over a working range of Reynolds number (or flowrate). For control purposes, any value of uncertainty may be specified. For custody-transfer measurement, users usually refer to the performance criteria described in relevant application standards, such as those of the International Organization for Standardization (ISO), the Organisation Internationale de Métrologie Légale (OIML), the American Petroleum Institute (API) *Manual of petroleum measurement standards*, or others where uncertainty, repeatability and linearity are specified.

The uncertainty is derived in Clause 6 using the equations derived in Clause 4. Clause 7 covers installation effects (on both the calibration and the use of the USM). Clause 8 describes calibration. Clause 9 covers the components of uncertainty that need only be evaluated once for a design of USM. Clause 11 covers how to deliver the performance in Clause 5 through the audit trail, and how to maintain it through the use of diagnostics and recalibration in the field (using a prover) and in the laboratory. Clause 10 covers meter characteristics, especially in terms of design, manufacture and markings.

© ISO 2012 – All rights reserved

Documents
Document Sharing Hub
Full document details: BS ISO 12242:2012

# 6 Uncertainty in measurement

## 6.1 Introduction

Following ISO/IEC Guide 98-3:2008,[43] this analysis is based on the mathematical relationship between the measured volume flow and all input quantities on which it depends. The standard uncertainty of each input quantity is evaluated and the combined uncertainty is derived by propagation of uncertainty.

The volume flow measured by a USM is given by Formulae (9) and (10). When the meter is calibrated, a calibration factor $K$ is included. Thus the volume flow is:

$$q_V = KK_\mathrm{p}A\sum_{i=1}^{n} w_i v_i \tag{21}$$

So the uncertainty depends on

a) the uncertainty $u(K)$ in the calibration factor $K$;

b) the uncertainty $u(K_\mathrm{p})$ in $K_\mathrm{p}$ due to the velocity profile;

c) the uncertainty $u(A)$ in the area of the measurement cross-section;

d) the uncertainty $u(v)$ due to the path-velocity measurement.

The evaluation of $u(v)$ is based on Formula (12) or Formula (19), as appropriate. The first factor on the right hand side of Formula (12) and Formula (19) can be referred to as the path geometry factor, $K_\mathrm{g}$. It determines what transit time difference is caused by a certain path velocity and transit time. The dimensions of $K_\mathrm{g}$ depend on whether Formula (12) or Formula (19) is used. The total uncertainty in the measurement of the path velocity thus includes the following three components:

1) the uncertainty $u(K_\mathrm{g})$ in the path geometry factor;

2) the uncertainty $u(t)$ in the time measurement;

3) the uncertainty $u(t_0)$ in the delay time compensation.

If temperature and pressure influences have to be considered, the appropriate expressions need to be included in Formulae (12) and (21). The uncertainties of the temperature and pressure measurement are added as additional uncertainty components.

The standard uncertainty of the flow measurement is derived from the components by propagation of uncertainty. The level of confidence of the standard uncertainty is 68 %, assuming a normal distribution (see ISO/IEC Guide 98-3:2008,[43] 4.3.6). A coverage factor can be applied to report an expanded uncertainty with a higher level of confidence; usually the coverage factor is $k = 2$, resulting in a level of confidence of approximately 95 % (see ISO/IEC Guide 98-3:2008,[43] 6.3.3).

Examples of uncertainty calculations are given in Annex C.

## 6.2 Evaluation of the uncertainty components

### 6.2.1 Introduction

The evaluation of the uncertainty components depends, among other things, on how the meter is calibrated.

Calibration methods are

a) theoretical prediction procedure only;

b) flow calibration in a laboratory (no *in situ* use of a prover or a master meter);


© ISO 2012 – All rights reserved
Documents
Document Sharing Hub
Full document details: BS ISO 12242:2012