BS ISO 12509:2023

BSI Standards Publication

Earth-moving machinery and rough-terrain trucks — Lighting, signalling and marking lights, and reflex reflectors

Documents
Document Sharing Hub

Full document details: BS ISO 12509:2023

National foreword

This British Standard is the UK implementation of ISO 12509:2023. It supersedes BS ISO 12509:2004, which is withdrawn.

The UK participation in its preparation was entrusted to Technical Committee B/513/1, Earth moving machinery (International).

A list of organizations represented on this committee can be obtained on request to its committee manager.

Contractual and legal considerations

This publication has been prepared in good faith, however no representation, warranty, assurance or undertaking (express or implied) is or will be made, and no responsibility or liability is or will be accepted by BSI in relation to the adequacy, accuracy, completeness or reasonableness of this publication. All and any such responsibility and liability is expressly disclaimed to the full extent permitted by the law.

This publication is provided as is, and is to be used at the recipient's own risk.

The recipient is advised to consider seeking professional guidance with respect to its use of this publication.

This publication is not intended to constitute a contract. Users are responsible for its correct application.

© The British Standards Institution 2023
Published by BSI Standards Limited 2023

ISBN 978 0 539 03657 2

ICS 53.100

Compliance with a British Standard cannot confer immunity from legal obligations.

This British Standard was published under the authority of the Standards Policy and Strategy Committee on 28 February 2023.

Amendments/corrigenda issued since publication

Date	Text affected

Documents
Document Sharing Hub

Full document details: BS ISO 12509:2023

INTERNATIONAL STANDARD

ISO 12509

Third edition
2023-01

Earth-moving machinery and rough-terrain trucks — Lighting, signalling and marking lights, and reflex reflectors

Engins de terrassement et chariots tout-terrain — Feux d'éclairage, de signalisation, de position et d'encombrement, et catadioptres

Reference number
ISO 12509:2023(E)

Documents
Document Sharing Hub
© ISO 2023

Full document details: BS ISO 12509:2023

COPYRIGHT PROTECTED DOCUMENT

© ISO 2023

All rights reserved. Unless otherwise specified, or required in the context of its implementation, no part of this publication may be reproduced or utilized otherwise in any form or by any means, electronic or mechanical, including photocopying, or posting on the internet or an intranet, without prior written permission. Permission can be requested from either ISO at the address below or ISO's member body in the country of the requester.

ISO copyright office
CP 401 • Ch. de Blandonnet 8
CH-1214 Vernier, Geneva
Phone: +41 22 749 01 11
Email: copyright@iso.org
Website: www.iso.org

Published in Switzerland

© ISO 2023 – All rights reserved

Documents
Document Sharing Hub

Full document details: BS ISO 12509:2023

Contents

Page

Foreword ..... **iv**

Introduction ..... **vi**

1 Scope **1**

2 Normative references **1**

3 Terms, definitions and symbols **1**
3.1 Terms and definitions 1
3.2 Symbols 5

4 General requirements **5**
4.1 Installation of lighting, signalling and marking lights, and reflex reflectors 5
4.2 Reference documents pertaining to lighting and marking devices 7

Annex A (normative) **Lighting combinations** **8**

Annex B (informative) **Forward visibility of red light and rearward visibility of white light** **9**

Annex C (normative) **Lighting, signalling and marking lights, and reflex reflectors — Data sheets** **10**

Annex D (informative) **Location of lighting, signalling and marking lights, and reflex reflectors** **49**

Annex E (informative) **Other documents pertaining to lighting and marking devices** **51**

Annex F (informative) **Requirements for emergency braking signal** **52**

Bibliography **53**

© ISO 2023 – All rights reserved

Documents
Document Sharing Hub

Full document details: BS ISO 12509:2023

Foreword

ISO (the International Organization for Standardization) is a worldwide federation of national standards bodies (ISO member bodies). The work of preparing International Standards is normally carried out through ISO technical committees. Each member body interested in a subject for which a technical committee has been established has the right to be represented on that committee. International organizations, governmental and non-governmental, in liaison with ISO, also take part in the work. ISO collaborates closely with the International Electrotechnical Commission (IEC) on all matters of electrotechnical standardization.

The procedures used to develop this document and those intended for its further maintenance are described in the ISO/IEC Directives, Part 1. In particular, the different approval criteria needed for the different types of ISO documents should be noted. This document was drafted in accordance with the editorial rules of the ISO/IEC Directives, Part 2 (see www.iso.org/directives).

Attention is drawn to the possibility that some of the elements of this document may be the subject of patent rights. ISO shall not be held responsible for identifying any or all such patent rights. Details of any patent rights identified during the development of the document will be in the Introduction and/or on the ISO list of patent declarations received (see www.iso.org/patents).

Any trade name used in this document is information given for the convenience of users and does not constitute an endorsement.

For an explanation of the voluntary nature of standards, the meaning of ISO specific terms and expressions related to conformity assessment, as well as information about ISO's adherence to the World Trade Organization (WTO) principles in the Technical Barriers to Trade (TBT), see www.iso.org/iso/foreword.html.

This document was prepared by Technical Committee ISO/TC 127, *Earth-moving machinery*, Subcommittee SC 3, *Machine characteristics, electrical and electronic systems, operation and maintenance*.

This third edition cancels and replaces the second edition (ISO 12509:2004), which has been technically revised.

The main changes are as follows:

— in the Scope, it was clarified that rough-terrain trucks are included;

— the term "earth-moving machines" was replaced with "machines" throughout this document;

— the normative references were updated;

— in Clause 3, several definitions were revised and several were removed as they no longer appear in this document;

— in Clause 4, technical changes were made including a re-write of 4.1.6 and the addition of 4.1.10, with Table 4-1 and addition of clauses moved from the former C.0;

— in Annex A, Table A-1 was revised, including the removal of the footnotes;

— in Annex B, the annex title was clarified and Figure B-1 was revised;

— Annex C from the previous edition was removed;

— Annex D from the previous edition was removed;

— in Annex E (now Annex C), there were technical changes to most of the clauses, including modifications to the text, the figures and the tables. Configurations text was removed in most clauses as this information is now covered in 4.1.10 and Table 4-1. The exception for steel-tracked or steel-pad-foot was moved to Table A-1. The content of Clause C.0 has been moved to other sections in this document and only the index remains;

© ISO 2023 – All rights reserved
Documents
Document Sharing Hub
Full document details: BS ISO 12509:2023

— in Annex F (now Annex D), the figures and keys were revised;

— in Annex G from the previous edition was removed.

Any feedback or questions on this document should be directed to the user's national standards body. A complete listing of these bodies can be found at www.iso.org/members.html.

© ISO 2023 – All rights reserved

Documents
Document Sharing Hub
Full document details: BS ISO 12509:2023

Introduction

Earth-moving machines and rough-terrain trucks are designed to function in a wide variety of operations and worksites. Their size, mass, speed, combinations and equipment also greatly vary. Therefore, the combination of lighting, signalling and marking lights, and reflex reflectors will differ.

This document provides information needed for the selection of lighting, signalling and marking lights and reflex reflectors based on machine application and speed.

© ISO 2023 – All rights reserved
Documents
Document Sharing Hub
Full document details: BS ISO 12509:2023

Earth-moving machinery and rough-terrain trucks — Lighting, signalling and marking lights, and reflex reflectors

1 Scope

This document specifies requirements for installation and performance of lighting, signalling and marking lights, and reflex reflectors. It is applicable to ride-on self-propelled wheeled or crawler earth-moving machines as defined in ISO 6165, and rough-terrain variable-reach trucks as defined in ISO 10896-1 and ISO 10896-2, hereafter known as "machines". These machines are used off-road and can occasionally be driven on the road.

NOTE 1 Meeting the requirements of this document does not ensure conformance to national or regional on-road regulations.

NOTE 2 Rough-terrain trucks with mast as defined in ISO 3691-1 and rough-terrain lorry-mounted trucks as defined in ISO 20297-1 are not specifically covered by this document, but this document can be used for guidance.

2 Normative references

The following documents are referred to in the text in such a way that some or all of their content constitutes requirements. For dated references, only the edition cited applies. For undated references, the latest edition of the referenced document (including any amendments) applies.

ISO 6165, *Earth-moving machinery — Basic types — Identification and vocabulary*

ISO 10896-1, *Rough-terrain trucks — Safety requirements and verification — Part 1: Variable-reach trucks*

ISO 10896-2, *Rough-terrain trucks — Safety requirements and verification — Part 2: Slewing trucks*

3 Terms, definitions and symbols

3.1 Terms and definitions

For the purposes of this document, the terms and definitions given in ISO 6165, ISO 10896-1, ISO 10896-2 and the following apply.

ISO and IEC maintain terminology databases for use in standardization at the following addresses:

— ISO Online browsing platform: available at https://www.iso.org/obp

— IEC Electropedia: available at https://www.electropedia.org/

3.1.1
zero Y plane
vertical plane which passes through the longitudinal centreline of the machine

[SOURCE: ISO 6746-1:2003, 3.1.1]

© ISO 2023 – All rights reserved

Documents
Document Sharing Hub
Full document details: BS ISO 12509:2023

3.1.2
ground reference plane
GRP
plane on which the machine is placed for measurements: in the case of the base machine, a hard, level surface; in the case of equipment and attachments, either a hard, level surface or compacted earth

[SOURCE: ISO 6746-1:2003, 3.2, modified — Note 1 to entry not included.]

3.1.3
extreme outer edge
plane parallel to the *zero Y plane* (3.1.1) of the machine and touching its lateral outer edge on either side of the machine, disregarding the projection of tyres near the point of contact with the *ground reference plane* (3.1.2) and connections for tyre-pressure gauges, the projection of any anti-skid device mounted on the wheels, of rear-view mirrors, and of side direction-indicator *lamps* (3.1.5), front and rear position lamps and stopping lamps

3.1.4
overall width
distance on Y coordinate between two Y planes passing through the *extreme outer edge* (3.1.3) of the machine on both sides of the *zero Y plane* (3.1.1)

3.1.5
lamp
device designated to illuminate the *road* (3.1.16) or ground (lighting) or to emit a light signal (light signalling)

Note 1 to entry: Marking light is similarly regarded as a lamp.

3.1.5.1
grouped
lamps (3.1.5) which have separate *illuminating surfaces* (3.1.7, 3.1.8) and separate light sources, but a common lamp body

Note 1 to entry: See Table 4-1.

3.1.5.2
combined
lamps (3.1.5) which have separate *illuminating surfaces* (3.1.7, 3.1.8), but a common light source and a common lamp body

Note 1 to entry: See Table 4-1.

3.1.5.3
reciprocally incorporated
lamps (3.1.5) which have separate light sources (or a single light source operating under different conditions), totally or partially common *illuminating surfaces* (3.1.7, 3.1.8) and a common lamp body

Note 1 to entry: See Table 4-1.

3.1.6
reflex reflector
device which, by the reflection of light emanating from a light source not connected to the machine, is used to indicate the presence of a machine or to identify a specific part of a machine to an observer near the source

3.1.7
illuminating surface
<lighting device> orthogonal projection of the full aperture of a reflector in a transverse plane

Note 1 to entry: If the lighting device has no reflector, the definition of the illuminating surface of a signalling device applies. If the lamp lens(es) extend(s) over part only of the full aperture of the reflector, then the projection of that part only is taken into account.

© ISO 2023 – All rights reserved
Documents
Document Sharing Hub
Full document details: BS ISO 12509:2023

Note 2 to entry: In the case of a dipped-beam headlamp, having a screened light source giving a defined cut-off, the illuminating surface is limited by the apparent trace of the cut-off on to the lens. If the reflector and glass are adjustable relative to one another, the mean adjustment is preferred.

3.1.8
illuminating surface
<signalling device> orthogonal projection of the *lamp* (3.1.5) in a plane perpendicular to its *reference axis* (3.1.10) and in contact with the exterior *light-emitting surface* (3.1.12) of a lamp

Note 1 to entry: This projection is bounded by the edges of screens situated in this plane which allows only 98 % of the total luminous intensity of the light to persist in the reference axis direction.

3.1.9
reflective surface
reflex reflector surface in a plane perpendicular to the *reference axis* (3.1.10) and bounded by planes on the outer edges of the light projection and parallel to this axis

3.1.10
reference axis
characteristic axis of the light signal for use as the reference direction (α = 0°, β = 0°) for photometric measurements and when fitting the *lamp* (3.1.5) on the machine

3.1.11
reference centre
intersection of the *reference axis* (3.1.10) with the *light-emitting surface* (3.1.12)

3.1.12
light-emitting surface
all or part of the exterior surface of the transparent lens that encloses the lighting and light signalling devices and conforms to certain defined photometric and colourimetric conditions

3.1.13
tell-tale
optical signal that when illuminated indicates actuation or deactivation of a machine function, a correct or defective functioning or condition, or a failure to function

3.1.13.1
operational tell-tale
tell-tale (3.1.13) which informs the operator whether a lighting or light signalling device or system that has been actuated is operating correctly or not

3.1.13.2
circuit-closed tell-tale
tell-tale (3.1.13) which informs the operator whether a lighting or light signalling device or system has been switched on but not whether a lighting is operating correctly or not

3.1.14
geometric visibility
specified angles which define the solid angle in which the *apparent surface* (3.1.15) of a *lamp* (3.1.5) or *reflex reflector* (3.1.6) is visible

Note 1 to entry: See Figure 3-1.

Note 2 to entry: The solid angle is determined by the segments of a sphere in which the centre coincides with the *reference centre* (3.1.11) of the *lamp* (3.1.5) and the equator is parallel to the *ground reference plane* (3.1.2). These segments are determined in relation to the *reference axis* (3.1.10). The horizontal angles correspond to the longitude and the vertical angle to the latitude. The horizontal angles are β_1 corresponding to longitude outboard, and β_2 corresponding to the longitude inboard, and the vertical angles are α_1 corresponding to the up latitude and α_2 corresponding to the down latitude (see data sheet diagram in Annex C).

© ISO 2023 – All rights reserved

Documents
Document Sharing Hub
Full document details: BS ISO 12509:2023

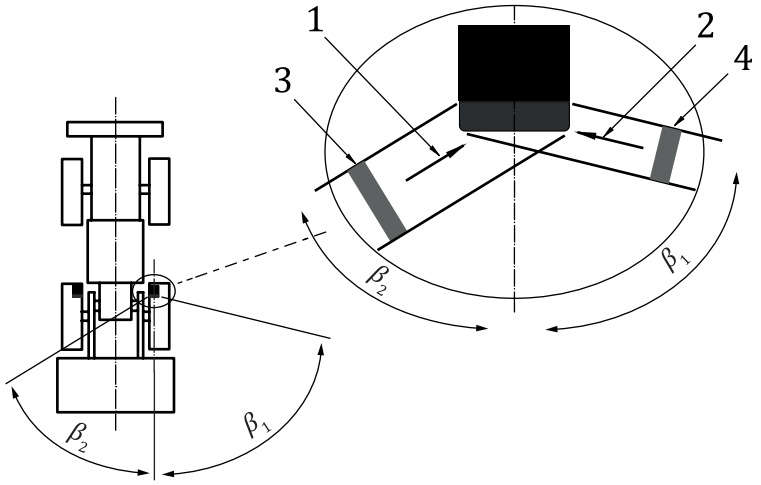

Key

1 direction of observation longitude inboard

2 direction of observation longitude outboard

3 apparent surface longitude inboard

4 apparent surface longitude outboard

Figure 3-1 — Example of geometric visibility showing directions of observation and apparent surfaces

3.1.15
apparent surface
orthogonal projection of the *light-emitting surface* (3.1.12) in a plane perpendicular to a specified direction of observation

Note 1 to entry: See Figure 3-1.

3.1.16
road
public traffic area for use by automotive vehicles for travel or transportation

Note 1 to entry: *Public traffic area* does not include the sites of temporary road works (for example, for repairs, maintenance, alterations, improvements, installations, or any other works to, above or under a road, including works to road equipment lighting, barriers, walls, etc.) or roads not open to the public (for example, on new housing and industrial developments), or on which public traffic is not permitted.

[SOURCE: ISO 17253:2014, 3.2]

3.1.17
travel on the road
travelling on the road
use of machines on the *road* (3.1.16) (for example, travelling between work sites, to and from the site of normal storage, travelling for refuelling of the machine) for purposes other than intended operation

Note 1 to entry: The crossing of a *road* (3.1.16) in order to carry out job site work can be considered travelling on the road.

[SOURCE: ISO 17253:2014, 3.3, modified — The term was originally "driving on the road" and Note 1 to entry has been added.]

3.1.18
wheel tread/track gauge
distance on Y coordinate between two Y planes passing through the mid-width of the sprocket teeth or tyre centreline as appropriate

© ISO 2023 – All rights reserved
Documents
Document Sharing Hub
Full document details: BS ISO 12509:2023

3.1.19
emergency braking signal
signal to indicate to other road users and exposed persons to the rear of the machine that a high retardation force has been applied to the machine relative to the prevailing road conditions

3.2 Symbols

B distance between the outer edges of the light-emitting surface

E distance between extreme outer edge of machine and outer illuminating surface of lighting device

D minimum distance between two lamps

H_1 maximum height above ground reference plane to upper edge of illuminating surface or reflective surface

H_2 minimum height above ground reference plane to lower edge of illuminating surface or reflective surface

K distance from front of machine or behind machine to edge of illuminating surface

L maximum length of base machine, including front and rear equipment

M distance between edges of illuminating surface

N distance between the edges of the illumination surface of the lamps

α_1 vertical angles corresponding to up latitude

α_2 vertical angles corresponding to down latitude

β_1 horizontal angles corresponding to longitude outboard

β_2 horizontal angles corresponding to longitude inboard

4 General requirements

4.1 Installation of lighting, signalling and marking lights, and reflex reflectors

4.1.1 The lighting, signalling and marking lights, and reflex reflectors shall be so fitted that, under normal operating conditions specified by the manufacturer, they retain the characteristics specified in Annex C. It shall not be possible for the lamps to be inadvertently disturbed, for example, due to excessive vibration. General locations for lighting, signalling and marking lights, and reflex reflectors are shown in Annex D.

4.1.2 The position (for example, height and orientation) of the lamps shall be verified with the unladen machine on the ground reference plane. All measurements in this document require the machine to be in the straight, unarticulated roading position. When the machine has a bucket, the bucket shall be in the carry position as specified by the manufacturer.

4.1.3 Lamps constituting a pair shall:

a) be fitted to the machine symmetrically in relation to the zero Y plane and at the same height above the ground reference plane, except on machines with unsymmetrical shape;

b) satisfy the same colourimetric characteristics (see CIE S004 for guidance);

c) have substantially identical photometric characteristics (see CIE S004 for guidance).

© ISO 2023 – All rights reserved

AVA Documents Document Sharing Hub
Full document details: BS ISO 12509:2023

4.1.4 The maximum height (H_1) shall be measured from the ground reference plane to the highest point of the illuminating surface. The minimum height (H_2) shall be measured from the ground reference plane to the lowest point of the illuminating surface. When the height requirements are substantially met, it is sufficient to refer to actual lamp edges.

4.1.5 The width dimension (E) shall be determined from the edge of the illuminating surface which is furthest from the zero Y plane of the machine. The width dimension (D) shall be determined from the inner edges of the illuminating surfaces which are closest to the zero Y plane of the machine. When the width requirements are substantially met, it is sufficient to refer to the actual lamp edges.

4.1.6 With the machine located on a horizontal plane and, in the case of articulated frame steering, in a straight position the machine shall be tested to verify that there is:

a) no direct visibility of red light from a lamp or red reflex reflector as given in Annex C if viewed by an observer (at a height above the ground reference plane between 1 m and 2,2 m) anywhere within Zone 1;

Zone 1 is in a transverse plane located 25 m from the front of the wheel/track. The width of Zone 1 is determined by 15° planes originating from the outermost front wheel tread/track gauge on the left side and right side of the machine [see Figure B-1 a)]. For machines with a single wheel/track at the front of the machine (for example, roller with drum), the 15° planes originate from the outside of the wheel/track, for example a drum.

b) no direct visibility of white light from a lamp or white reflex reflector as given in Annex C if viewed by an observer (at a height above the ground reference plane between 1 m and 2,2 m) anywhere within Zone 2 with the following exceptions:

— white light from the reversing lamp(s);

— white light from the working lamp(s).

Zone 2 is in a transverse plane located 25 m from the rear of the wheel/track. The width of Zone 2 is determined by 15° planes originating from the outermost rear wheel tread/track gauge on left and right side of the machine. [see Figure B-1 b)]. For machines with a single wheel/track at the rear of the machine (for example, roller with drum), the 15° planes originate from the outside of the wheel/track, for example, a drum.

4.1.7 The electrical connections shall be such that the front position lamps, rear position lamps, and rear registration plate lamp(s) (if any), can only be switched on and off simultaneously.

4.1.8 The electrical connections shall be such that the upper beam headlamps, dipped beam headlamps, and rear fog lamp(s) (if any) cannot be switched on unless the front and rear position lamps, and rear registration plate lamp(s) (if any) are also switched on. This requirement shall not apply when upper beam or dipped beam headlamps are used to give short momentary luminous signals.

4.1.9 Lamps shall be fitted to the machine according to the data sheets in Annex C. Lighting combinations given in Annex C are defined in Annex A, which shall be followed.

4.1.10 Lamps may be grouped, combined, or reciprocally incorporated with one another provided that all requirements regarding colour, position, orientation, geometric visibility, electrical connections, and other requirements, if any, for each lamp are fulfilled. (See Table 4-1.)

Table 4-1 — Comparison of lamp types

Lamp types	Illuminating surface	Light source	Lamp body
grouped	separate	separate	common
[a] Can be a single light source operating under different conditions.			

© ISO 2023 – All rights reserved
Documents
Document Sharing Hub
Full document details: BS ISO 12509:2023

Table 4-1 *(continued)*

Lamp types	Illuminating surface	Light source	Lamp body
combined	separate	common	common
reciprocally incorporated	common or partially common	separate[a]	common

[a] Can be a single light source operating under different conditions.

4.1.11 The dimensions and geometric visibility specifications given in the data sheets in Annex C are based on the travel or the carry position of the machine as specified by the manufacturer.

4.1.12 Lamps may be activated and deactivated automatically for the purpose of the operator aid as long as the general requirements of this document are followed (for example, autonomous emergency braking).

4.1.13 Figures in Annex C are only representations; actual mounting may vary.

NOTE Where national or regional requirements differ from the requirements of this document, the national or regional requirements can take precedence.

4.2 Reference documents pertaining to lighting and marking devices

Lighting and marking devices can be subject to regional standards and regulations. Annex E provides example reference documents pertaining to lighting and marking devices.

© ISO 2023 – All rights reserved

Documents
Document Sharing Hub
Full document details: BS ISO 12509:2023

Annex A
(normative)

Lighting combinations

Table A-1 defines lighting combinations based on machine application and the rated maximum travelling speed.

NOTE 1 Following Table A-1 does not ensure conformance to specific national roading standards or regulations. It is possible that all lighting, signalling and marking lights, and reflex reflectors used on machines in lighting group II need to be type approved according to the national regulations.

NOTE 2 The crossing of a road can be considered travelling on the road.

Table A-1 — Lighting combinations

Machines application	Lighting groups	Rated maximum travelling speed ν (km/h)		
		A ν ≤ 10	**B** 10 < ν ≤ 40	**C** ν > 40
Machines that are not configured for travel on the road.	I	Lighting groups I or II can apply to a given machine type. Manufacturer defines lighting group I or II, based on lighting configuration provided.		
Machines that are configured for travel on the road.	II			
Machines not allowed to travel on the road due to physical characteristics exceeding road limits due to regulations.	III	EXAMPLE Machines that exceed permissible axle load limits, machine width exceeds permissible dimensions, machines with steel tracks, sheepfoot drums or padfoot drums.		

© ISO 2023 – All rights reserved
Documents
Document Sharing Hub
Full document details: BS ISO 12509:2023

Annex B
(informative)

Forward visibility of red light and rearward visibility of white light

The zone for which no red light from a lamp or red reflex reflector is to be visible to the front of the machine is shown in Figure B-1 a).

The zone for which no white light from a lamp or white reflex reflector is to be visible to the rear of the machine is shown in Figure B-1 b).

Dimensions in metres

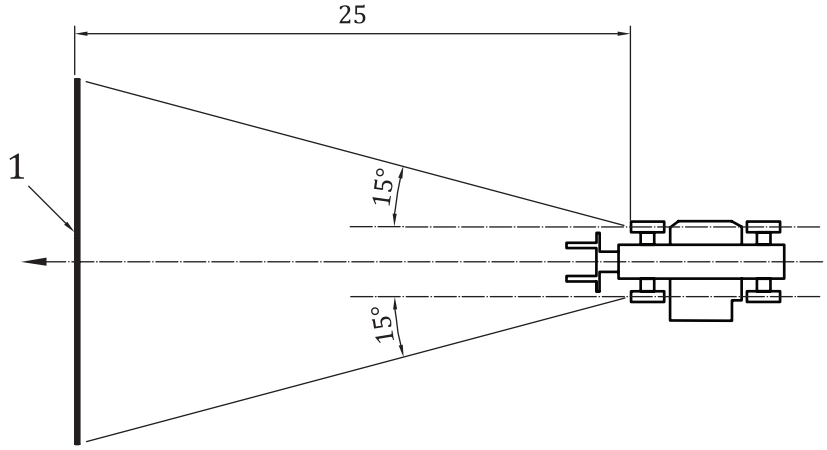

a) Forward visibility zone of no red light from a lamp or red reflex reflector [see 4.1.6 a)]

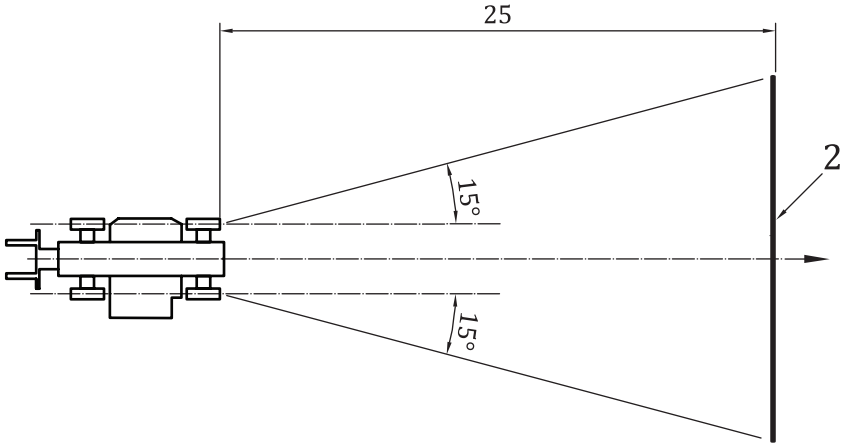

b) Rearward visibility zone of no white light from a lamp or white reflex reflector [see 4.1.6 b)]

Key

1 zone 1

2 zone 2

Figure B-1 — Forward visibility of red light and rearward visibility of white light

© ISO 2023 – All rights reserved

Documents
Document Sharing Hub
Full document details: BS ISO 12509:2023

Annex C
(normative)

Lighting, signalling and marking lights, and reflex reflectors — Data sheets

Index to data sheets

Lighting

C.1 Dipped beam headlamp

C.2 Upper beam headlamp

C.3 Work lamp

Signalling lights

C.4 Reversing lamp

C.5 Indicator lamps

C.6 Hazard warning signal

C.7 Stop lamp

Marking lights

C.8 Rear registration plate lamp

C.9 Front position lamp

C.10 Rear position lamp

C.11 Rear fog lamp

C.12 Special warning lamp

Reflex reflectors

C.13 Rear reflex reflector

C.14 Front reflex reflector

C.15 Side reflex reflector

C.16 Slow-moving vehicle (SMV) plate

In the tables of this annex:

— S specifies minimum requirements regarding lighting, signalling, and marking lights and reflex reflectors for on-road or off-road use;

— O specifies optional lighting, signalling and marking lights and reflex reflectors for on-road or off-road use which may be installed on machines. When these lighting, signalling and marking lights, and reflex-reflector devices are used, they should be in accordance with this document.

© ISO 2023 – All rights reserved

Documents
Document Sharing Hub

Full document details: BS ISO 12509:2023

— N/A is not applicable.

C.1 Dipped beam headlamp

C.1.1 Dipped beam headlamp: lamp used to illuminate the road or the ground reference plane ahead of the machine without causing undue dazzle or discomfort to oncoming drivers and other road users or workers. See Figure C.1-1 and Table C.1-1.

NOTE Dipped beam headlamps are also referred to as driving lamps, low beam headlamps, passing headlamps.

C.1.1.1 Colour of light: white.

C.1.1.2 Alignment: towards the front.

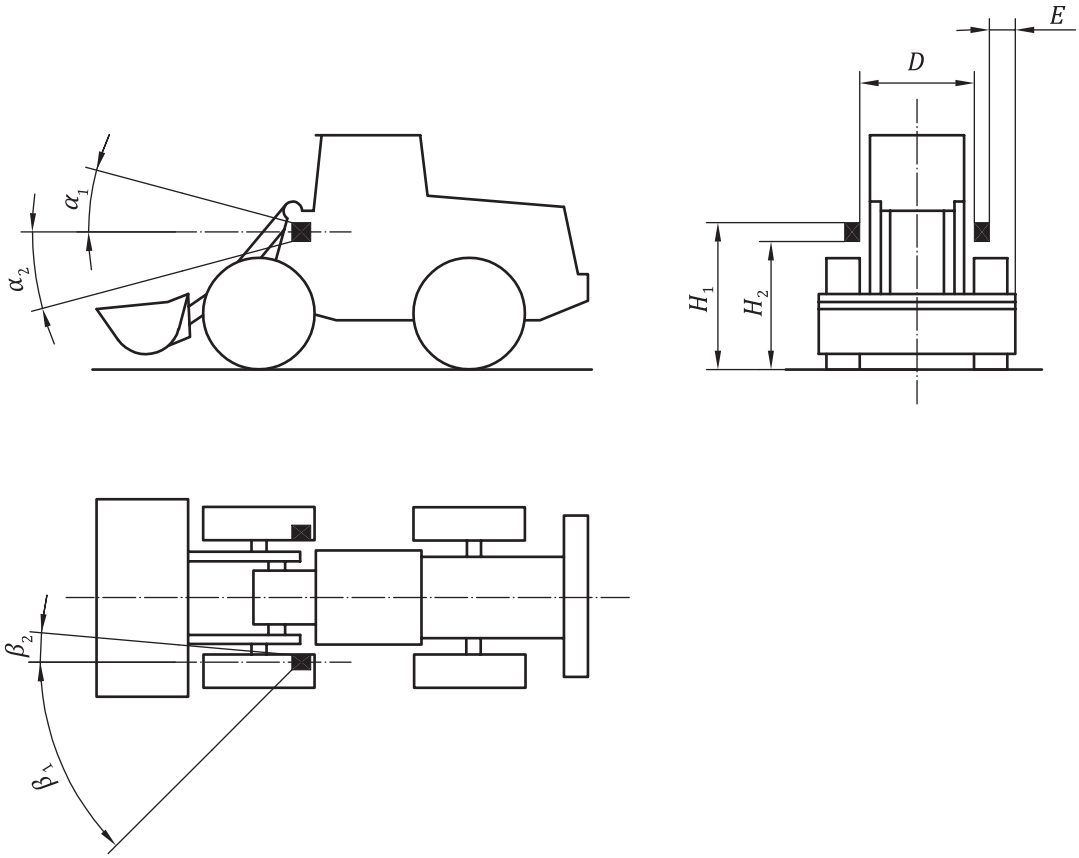

Figure C.1-1 — Dipped beam headlamp

© ISO 2023 – All rights reserved

Documents
Document Sharing Hub
Full document details: BS ISO 12509:2023

Table C.1-1 — Requirements for dipped beam headlamp

Lighting combinations (see Annex A)	**I**			**II**			**III**		
	A	**B**	**C**	**A**	**B**	**C**	**A**	**B**	**C**
Application to machines	O	O	O	S	S	S	N/A	O	O
Number	Two[a]						N/A	Two[a]	
Dimensions, mm									
H_1	≤ 1 500[b]						N/A	≤ 2 100[c]	
H_2	> 500						N/A	> 500	
E	≤ 400[d]						N/A	≤ 400[d]	
D	N/A								
Geometric visibility, minimum angles									
α_1	10°						N/A	10°	
α_2	10°[e]						N/A	10°[e]	
β_1	45°						N/A	45°	
β_2	5°[f]						N/A	5°[f]	
Electrical connections	The dipped beam light may remain switched on at the same time as the upper beam light. When the control switch for dipped beam light is activated, all upper beam lights shall be switched off.								
Tell-tale	N/A								
Other requirements	Symmetrically in relation to the zero Y plane[g]								

a In front of the machine as far ahead as possible. The light shall not cause discomfort to the operator either directly or indirectly through the rear-view mirror or other reflecting surfaces. Two additional dipped beam headlights are optional.

b May be > 1 500 mm if the design of the machine makes it impractical to keep within 1 500 mm.

c May be > 2 100 mm if the design of the machine makes it impractical to keep within 2 100 mm.

d Owing to the design, may be > 400 mm from the extreme outer edge of the machine.

e May be reduced to 5° if the design of the machine makes it necessary.

f May be reduced to 0° if the structure of the machine makes it impractical (for example, loaders and other machines with front end attachments).

g Initial adjustment of the cut-off line. The distance between the screen and the headlamp reference centre shall be at 10 m. When the highest point of the illuminating surface of the headlamp is

— ≤ 1 200 mm, the dipped beam headlamp inclination shall be between 1 % and 3 %, and

— > 1 200 mm, the adjustment of the dipped beam headlamps mounted higher than 1 200 mm shall be such that the horizontal part of the cut-off line at a distance of 15 m in front of the machine is half the height of the centre of the dipped beam headlamp.

C.2 Upper beam headlamp

C.2.1 Upper beam headlamp: lamp used to illuminate the road or the ground reference plane over a long distance ahead of the machine. See Figure C.2-1 and Table C.2-1.

NOTE Upper beam headlamps are also referred to as main beam lamps, high beam headlamps.

C.2.1.1 Colour of light: white.

C.2.1.2 Alignment: towards the front.

© ISO 2023 – All rights reserved

Documents
Document Sharing Hub

Full document details: BS ISO 12509:2023