BRITISH STANDARD

BS ISO 12643-4:2010

# Graphic technology — Safety requirements for graphic technology equipment and systems

## Part 4: Converting equipment and systems

ICS 37.100.10

NO COPYING WITHOUT BSI PERMISSION EXCEPT AS PERMITTED BY COPYRIGHT LAW

British Standards
Document Sharing Hub

Full document details: BS ISO 12643-4:2010

# National foreword

This British Standard is the UK implementation of ISO 12643-4:2010.

The UK participation in its preparation was entrusted to Technical Committee PAI/43, Graphic technology.

A list of organizations represented on this committee can be obtained on request to its secretary.

This publication does not purport to include all the necessary provisions of a contract. Users are responsible for its correct application.

**Compliance with a British Standard cannot confer immunity from legal obligations.**

This British Standard was published under the authority of the Standards Policy and Strategy Committee on 31 March 2010

© BSI 2010

**ISBN 978 0 580 64656 0**

**Amendments/corrigenda issued since publication**

| Date | Comments |
|---|---|
| | |
| | |
| | |
| | |

Documents
Document Sharing Hub

Full document details: BS ISO 12643-4:2010

# INTERNATIONAL STANDARD

# ISO 12643-4

First edition
2010-03-01

## Graphic technology — Safety requirements for graphic technology equipment and systems —

## Part 4: Converting equipment and systems

*Technologie graphique — Exigences de sécurité pour les systèmes et l'équipement de technologie graphique —*

*Partie 4: Systèmes et équipement de façonnage*

Reference number
ISO 12643-4:2010(E)

Documents
Document Sharing Hub

© ISO 2010

Full document details: BS ISO 12643-4:2010

**PDF disclaimer**

This PDF file may contain embedded typefaces. In accordance with Adobe's licensing policy, this file may be printed or viewed but shall not be edited unless the typefaces which are embedded are licensed to and installed on the computer performing the editing. In downloading this file, parties accept therein the responsibility of not infringing Adobe's licensing policy. The ISO Central Secretariat accepts no liability in this area.

Adobe is a trademark of Adobe Systems Incorporated.

Details of the software products used to create this PDF file can be found in the General Info relative to the file; the PDF-creation parameters were optimized for printing. Every care has been taken to ensure that the file is suitable for use by ISO member bodies. In the unlikely event that a problem relating to it is found, please inform the Central Secretariat at the address given below.

**COPYRIGHT PROTECTED DOCUMENT**

© ISO 2010

All rights reserved. Unless otherwise specified, no part of this publication may be reproduced or utilized in any form or by any means, electronic or mechanical, including photocopying and microfilm, without permission in writing from either ISO at the address below or ISO's member body in the country of the requester.

ISO copyright office
Case postale 56 • CH-1211 Geneva 20
Tel. + 41 22 749 01 11
Fax + 41 22 749 09 47
E-mail copyright@iso.org
Web www.iso.org

Published in Switzerland



© ISO 2010 – All rights reserved

Documents
Document Sharing Hub

Full document details: BS ISO 12643-4:2010

# Contents

Page

**Foreword** ..... v

**Introduction** ..... vi

**1 Scope** ..... 1

**2 Normative references** ..... 1

**3 Terms and definitions** ..... 2

**4 Equipment covered by this part of ISO 12643** ..... 2
**4.1 General** ..... 2
**4.2 Machines used primarily in a converting operation** ..... 2
**4.3 Machines used in both printing and converting processes** ..... 2

**5 Machinery for the production of corrugated board** ..... 3
**5.1 All machines** ..... 3
**5.2 Unwinding stations** ..... 4
**5.3 Splicers** ..... 6
**5.4 Preheater** ..... 7
**5.5 Single facer** ..... 9
**5.6 Inclined belt conveyor** ..... 14
**5.7 Bridge** ..... 14
**5.8 Braking and web aligning section** ..... 15
**5.9 Gluing machine** ..... 15
**5.10 Heating and pulling section** ..... 16
**5.11 Rotary shear unit** ..... 18
**5.12 Pulling unit** ..... 18
**5.13 Slitter-scorer units** ..... 19
**5.14 Web diverter** ..... 20
**5.15 Sheeters** ..... 20
**5.16 Stacker devices** ..... 21

**6 Folding box gluer machines** ..... 25
**6.1 Entire machine** ..... 25
**6.2 Feeder** ..... 25
**6.3 Folding section** ..... 25
**6.4 Gluing section** ..... 27
**6.5 Folding belt** ..... 27
**6.6 Pressing section** ..... 28

**7 Pre-feeders** ..... 29
**7.1 Pre-feeder with pile carrier plate** ..... 29
**7.2 Pre-feeder with pile turner** ..... 30

**8 In-line machines** ..... 32
**8.1 Entire machine** ..... 32
**8.2 Feeding unit** ..... 33
**8.3 Printing unit** ..... 35
**8.4 Slitter-scorer unit, rotary die-cutter** ..... 36
**8.5 Folding unit (folding box gluer)** ..... 36
**8.6 Taping unit** ..... 37
**8.7 Stitching unit** ..... 37

**9 Automatic flatbed die-cutting machines** ..... 38
**9.1 Entire machine** ..... 38
**9.2 Feeder** ..... 39

Documents
Document Sharing Hub

© ISO 2010 – All rights reserved


Full document details: BS ISO 12643-4:2010

**9.3 Punching section ... 39**
**9.4 Stripping section ... 40**
**9.5 Blank separating section, blank delivery ... 40**
**9.6 Trimming and delivery of gripper edge ... 40**

**10 Roller press die-cutters ... 40**

**11 Tube winding machines ... 40**
**11.1 Ply reels ... 40**
**11.2 In-running nips on shaft bearings ... 40**
**11.3 In-running nip between winding belt and winding material ... 40**
**11.4 In-running nips ... 42**
**11.5 In-running nips between glue rollers ... 42**
**11.6 Tube cutting and sawing section ... 42**
**11.7 Tube transfer ... 42**

**12 Machinery for the production of envelopes ... 42**
**12.1 Printing unit guarding ... 42**
**12.2 Longitudinal and cross-scoring section ... 43**
**12.3 Form cutting section ... 43**
**12.4 Driven guide rollers ... 43**
**12.5 Window cutting section ... 43**
**12.6 Window material conveying section with unwinding unit ... 43**
**12.7 Scraper gluing unit ... 44**
**12.8 Separating cutting section ... 44**
**12.9 Bottom flap folding section ... 44**
**12.10 Transport rolls ... 45**
**12.11 Staggering wheel ... 45**
**12.12 Roller gluing unit ... 45**
**12.13 Hot air dryers ... 47**
**12.14 Separation roller before aligner section ... 47**
**12.15 Aligner section ... 47**
**12.16 Seal flap folding section ... 47**
**12.17 Separating disc delivery ... 48**
**12.18 Starting the machine with interlocking guards open ... 48**

**13 Instruction handbook ... 48**
**13.1 Corrugated board machinery ... 48**
**13.2 Machines for the production of envelopes ... 49**

**Bibliography ... 51**


© ISO 2010 – All rights reserved

Documents
Document Sharing Hub

Full document details: BS ISO 12643-4:2010

## Foreword

ISO (the International Organization for Standardization) is a worldwide federation of national standards bodies (ISO member bodies). The work of preparing International Standards is normally carried out through ISO technical committees. Each member body interested in a subject for which a technical committee has been established has the right to be represented on that committee. International organizations, governmental and non-governmental, in liaison with ISO, also take part in the work. ISO collaborates closely with the International Electrotechnical Commission (IEC) on all matters of electrotechnical standardization.

International Standards are drafted in accordance with the rules given in the ISO/IEC Directives, Part 2.

The main task of technical committees is to prepare International Standards. Draft International Standards adopted by the technical committees are circulated to the member bodies for voting. Publication as an International Standard requires approval by at least 75 % of the member bodies casting a vote.

Attention is drawn to the possibility that some of the elements of this document may be the subject of patent rights. ISO shall not be held responsible for identifying any or all such patent rights.

ISO 12643-4 was prepared by Technical Committee ISO/TC 130, *Graphic technology*.

It is the intent of ISO/TC 130 that this first edition of ISO 12643-4 become applicable to new equipment manufactured from 2011-01-01.

ISO 12643 consists of the following parts, under the general title *Graphic technology — Safety requirements for graphic technology equipment and systems*:

— *Part 1: General requirements*

— *Part 2: Prepress and press equipment and systems*

— *Part 3: Binding and finishing equipment and systems*

— *Part 4: Converting equipment and systems*

— *Part 5: Stand-alone platen presses*

© ISO 2010 – All rights reserved


Documents
Document Sharing Hub
Full document details: BS ISO 12643-4:2010

## Introduction

The purpose of this part of ISO 12643 is to reduce the risk of injury to operating personnel working on converting equipment.

This part of ISO 12643 provides requirements for the design and construction of converting equipment used in the package printing, converting and graphic technology industries. It covers equipment not addressed by the other parts of ISO 12643. It is intended to be used in conjunction with ISO 12643-1 and provides additional requirements that are specific to converting equipment.

During the development of this part of ISO 12643, existing relevant standards of other countries were taken into consideration. An effort has been made to take into consideration the requirements of many countries, recognizing that national standards or laws may dictate national requirements. Cases where a national requirement was known to differ from this part of ISO 12643 have been noted.

This part of ISO 12643 was developed to harmonize the following US and European safety standards:

ANSI/PMMI B155.1, *Safety Requirements for Packaging Machinery and Packaging-Related Converting Machinery*

EN 1010-4, *Safety of machinery — Safety requirements for the design and construction of printing and paper converting machines — Part 4: Bookbinding, paper converting and finishing machines*

EN 1010-5, *Safety of machinery — Safety requirements for the design and construction of printing and paper converting machines — Part 5: Machines for the production of corrugated board and machines for the conversion of flat and corrugated board*


© ISO 2010 – All rights reserved
Documents
Document Sharing Hub
Full document details: BS ISO 12643-4:2010

INTERNATIONAL STANDARD ISO 12643-4:2010(E)

# Graphic technology — Safety requirements for graphic technology equipment and systems —

## Part 4: Converting equipment and systems

## 1 Scope

This part of ISO 12643 provides safety requirements for the design and construction of converting equipment used in the package printing, converting and graphic technology industries. It is applicable to converting equipment not covered by other parts of ISO 12643. It is intended to be used in conjunction with the general requirements given in ISO 12643-1.

## 2 Normative references

The following referenced documents are indispensable for the application of this document. For dated references, only the edition cited applies. For undated references, the latest edition of the referenced document (including any amendments) applies.

ISO 12643-1, *Graphic technology — Safety requirements for graphic technology equipment and systems — Part 1: General requirements*

ISO 13732-1, *Ergonomics of the thermal environment — Methods for the assessment of human responses to contact with surfaces — Part 1: Hot surfaces*

ISO 13849-1, *Safety of machinery — Safety-related parts of control systems — Part 1: General principles for design*

ISO 13850, *Safety of machinery — Emergency stop — Principles for design*

ISO 13855, *Safety of machinery — Positioning of protective equipment with respect to the approach speeds of parts of the human body*

ISO 13857, *Safety of machinery — Safety distances to prevent hazard zones being reached by upper and lower limbs*

ISO 14119, *Safety of machinery — Interlocking devices associated with guards — Principles for design and selection*

ISO 14122-3, *Safety of machinery — Permanent means of access to machinery — Part 3: Stairs, stepladders and guard-rails*

IEC 60529, *Degrees of protection provided by enclosures (IP code)*

IEC 62061, *Safety of machinery — Functional safety of safety-related electrical, electronic and programmable electronic control systems*

EN 619, *Continuous handling equipment and systems — Safety and EMC requirements for equipment for mechanical handling of unit loads*

Documents
Document Sharing Hub

© ISO 2010 – All rights reserved



Full document details: BS ISO 12643-4:2010

## 3 Terms and definitions

For the purposes of this document, the terms and definitions given in ISO 12643-1 apply.

## 4 Equipment covered by this part of ISO 12643

### 4.1 General

This part of ISO 12643 covers a variety of equipment used in printing plants and converting operations. Those used primarily in a converting operation are listed in 4.2, while those that may be used in a printing operation covered in other parts of ISO 12643 are listed in 4.3.

### 4.2 Machines used primarily in a converting operation

Machines used primarily in a converting operation include the following:

— machinery for the production of envelopes;

— machinery for the production of corrugated board;

— folding-box gluer machines;

— in-line machines;

— automatic flatbed punching machines;

— tube-winding machines;

— box-making machines;

— finishing/window equipment;

— hole punching machines;

— laminating machines/laminators;

— pre-feeding/stack-turning machines.

### 4.3 Machines used in both printing and converting processes

Machines used in both printing and converting processes include the following:

— label printing machines (see also ISO 12643-1 and ISO 12643-2);

— coating machines (see also ISO 12643-3);

— curing and drying machines (see also ISO 12643-2);

— cutters, creasers and die-cutters (see also ISO 12643-3);

— rewinding/roll equipment/slitting and rewinding equipment (see also ISO 12643-1);

— embossing equipment (see also ISO 12643-2 and ISO 12643-5);

— tension control equipment (see also ISO 12643-1).


Documents
Document Sharing Hub
© ISO 2010 – All rights reserved
Full document details: BS ISO 12643-4:2010

# 5 Machinery for the production of corrugated board

## 5.1 All machines

### 5.1.1 General

An example of a corrugating machine is shown in Figure 1.

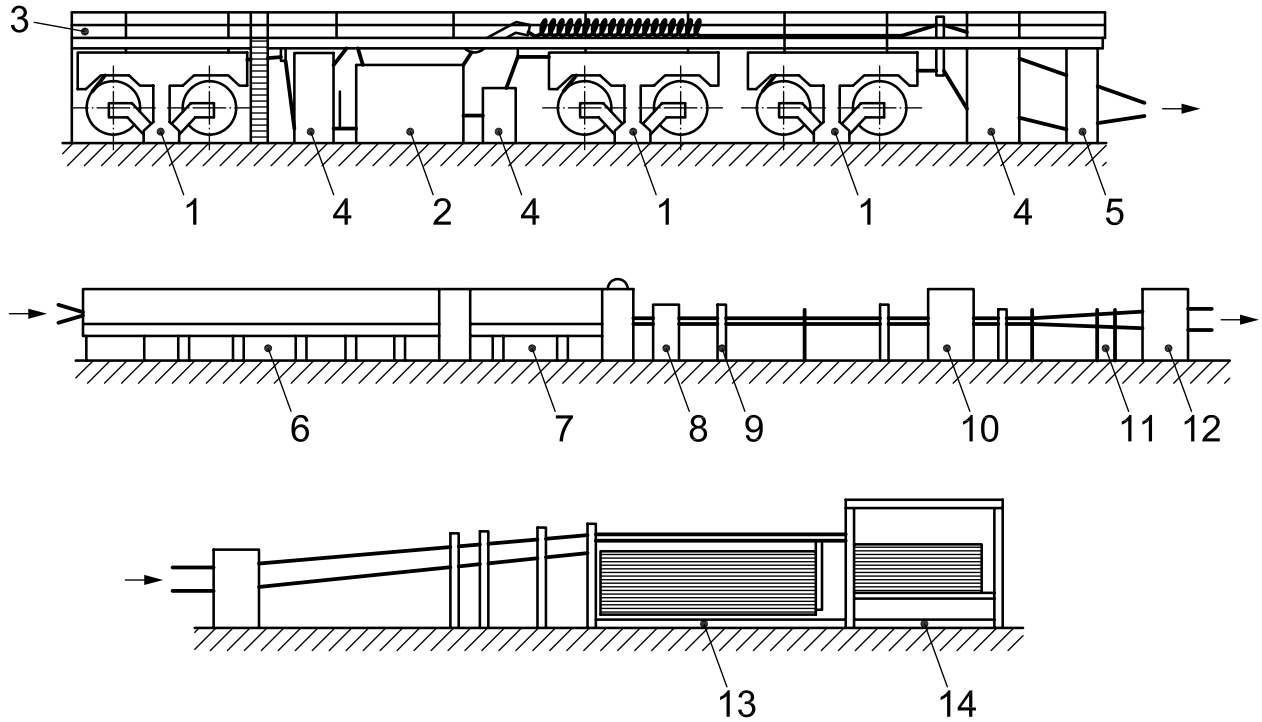


**Key**

| | | | | | |
|---|---|---|---|---|---|
| 1 | unwind | 6 | heating section | 11 | web diverter |
| 2 | single facer | 7 | pulling section | 12 | sheeter |
| 3 | bridge | 8 | rotary shears | 13 | upstacker |
| 4 | preheater | 9 | pulling unit | 14 | downstacker |
| 5 | gluing machine | 10 | slitter-scorer unit | | |

**Figure 1 — Principle of a machine for the production of corrugated board**

### 5.1.2 Emergency stop

Emergency stop devices shall be provided on each motion control station. Emergency stop devices shall be no more than 15 m apart.

Emergency stop devices shall stop the motion of the entire machine.

**EXCEPTION — The glue rollers of the gluing unit may continue running if the danger points on the gluing unit are safeguarded by guards.**

© ISO 2010 – All rights reserved

Documents
Document Sharing Hub
Full document details: BS ISO 12643-4:2010

#### 5.1.3 Zone control with stop/safe devices

Where stop/safe devices are provided, the following requirements apply:

— stop/safe actuators shall be marked such that they clearly indicate the section to which they apply;

— signal processing shall comply with $PL_r$ d of ISO 13849-1 or SIL 2 of IEC 62061.

Where the machine is configured into control zones, they shall be as follows (see Figure 2):

a) one control zone for each single-facer group (unwind of liner with preheater, single facer, unwind of corrugated web);

b) one control zone for the liner unwind before heating up to stacker device.

One or more stop/safe devices shall be provided in each control zone.

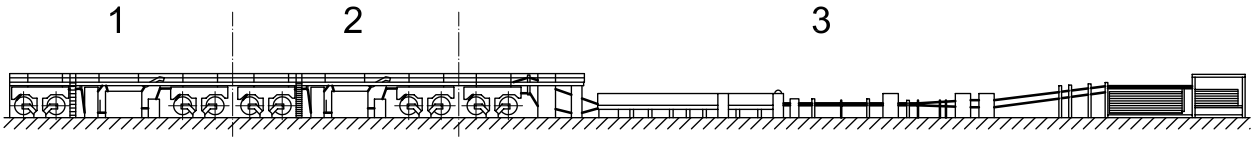


**Key**

1 first control zone for first single-facer group

2 second control zone for second single-facer group

3 third control zone for liner unwind up to stacker device

**Figure 2 — Control zones**

#### 5.1.4 Access stairs and walkways

Access stairs and walkways shall comply with ISO 12643-1.

#### 5.1.5 Steam pipes

Steam pipes that can be accessed from any working level shall be insulated up to a height of 2,70 m from the working level for protection against burning.

#### 5.1.6 Guarding access points between system components

Accessible areas between system components shall be guarded by means of fixed or interlocking guards in accordance with ISO 12643-1 if a hazard point can be reached, e.g. the area between a gluing machine and a heating and pulling section.

#### 5.1.7 Audible start-up warning

Corrugating machines shall have an audible warning system that complies with ISO 12643-1.

### 5.2 Unwinding stations

#### 5.2.1 General

Means shall be provided to ensure that reel cores, which might be stuck to a reel cone, can be safely removed, e.g. using an automatic reel core ejector that pushes the core away from the cone.


© ISO 2010 – All rights reserved
Documents
Document Sharing Hub
Full document details: BS ISO 12643-4:2010

### 5.2.2 Safeguarding automatic reel loading

The area where automatic reel loading takes place shall be safeguarded in accordance with ISO 12643-1.

See Figure 3 for an illustration of the positioning of electro-sensitive protective devices (ESPDs) for this equipment in accordance with the requirements of ISO 12643-1.

Dimensions in millimetres

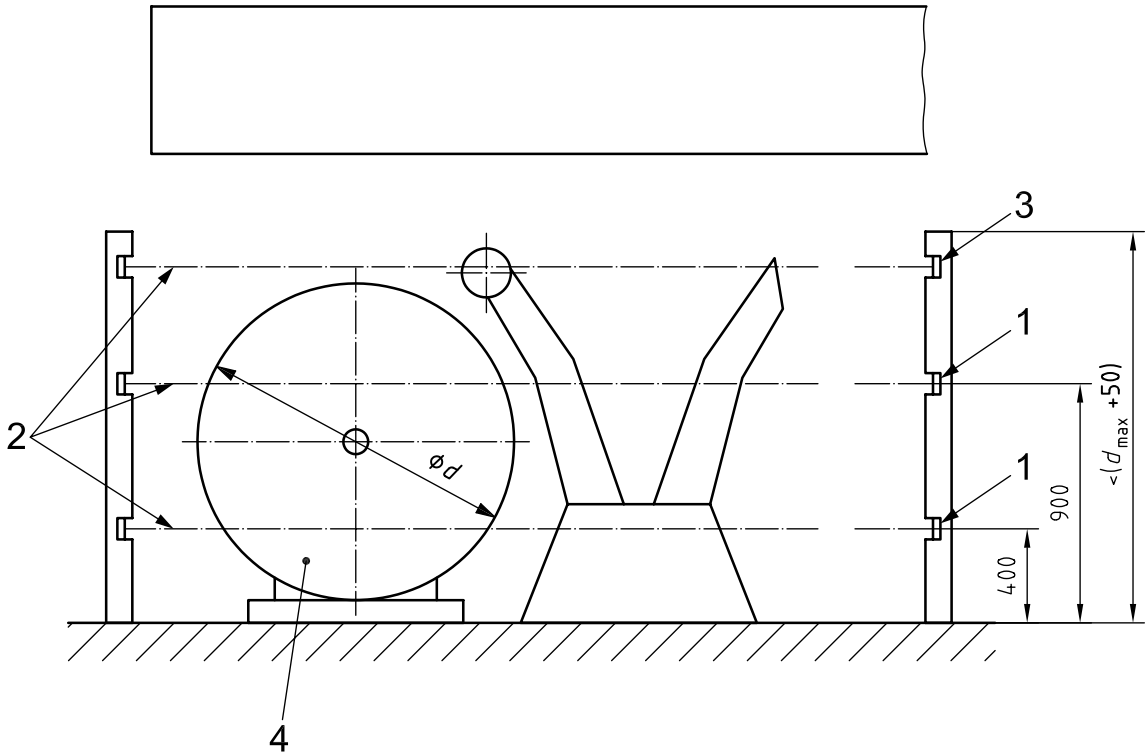


**Key**

1 ESPD
2 photoelectric beam of the ESPD
3 additional ESPD
4 material reel

**Figure 3 — Unwinding station, automatic reel loading**

### 5.2.3 Chucking cones and lifting arms

The hold-to-run speeds for inserting the chucking cones and moving the lifting arms may be increased to 15 m/min maximum if the hold-to-run buttons are located at a minimum distance of 850 mm from the lifting arms.

### 5.2.4 Braking systems

The blowers for the braking systems on unwinding stations shall have at least the degree of protection IP 23, as specified in IEC 60529. Accumulation of inflammable dust in the brakes shall be prevented.

NOTE The accumulation of inflammable dust in the brakes can be reduced if the louvres provided in the ventilator housing open to the bottom while the lifting arms are in operating position.

© ISO 2010 – All rights reserved

Documents
Document Sharing Hub
Full document details: BS ISO 12643-4:2010

## 5.3 Splicers

### 5.3.1 Guarding hazard points

On splicers, any hazard points between the dancer roller carriage and guide rollers, and between the dancer roller and fixed parts of the machine shall be avoided by design measures or be safeguarded (see Figure 4).

If safeguarding by distance, the following requirements apply:

— a minimum distance of 25 mm if the hazard points are at a height greater than 2,20 m;

— a minimum distance of 120 mm if the hazard points are at a height less than or equal to 2,20 m.

Safeguarding may also be achieved by the use of guards in accordance with ISO 12643-1 or safety devices with approach reaction (e.g. trip devices, pressure-sensitive mats, electro-sensitive devices).

### 5.3.2 Dancer roller

The movement of the dancer roller into position for web threading shall be safeguarded.

Where hold-to-run control is used for safeguarding, the hold-to-run speed shall not exceed 15 m/min.

The in-running nips on the dancer roll carriage wheels shall be safeguarded by fixed guards that meet the requirements of ISO 12643-1.

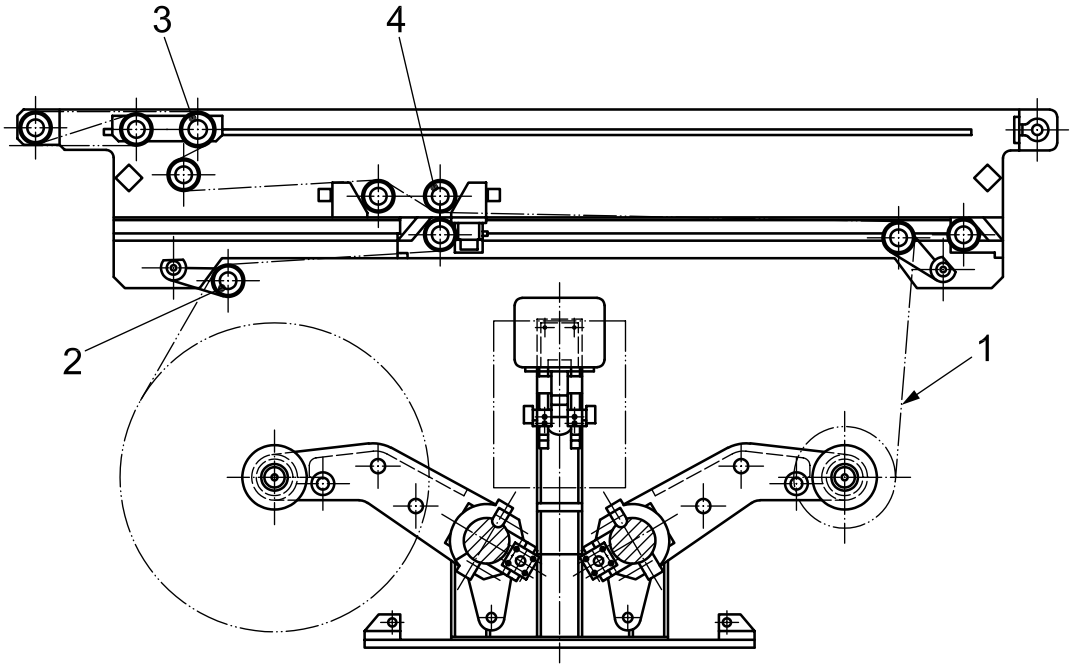


**Key**

1 paper web
2 guide rollers
3 dancer roller
4 gluing unit

**Figure 4 — Splicer**


© ISO 2010 – All rights reserved
Documents
Document Sharing Hub
Full document details: BS ISO 12643-4:2010

#### 5.3.3 Splicers

On splicers, hazard points between the movable suction bar and fixed machine parts shall be prevented by safety measures or be safeguarded (see Figure 4). Safeguarding can be achieved by one or more of the following measures:

— providing a minimum distance of 25 mm for danger points above 2,20 m and of 120 mm for heights less than or equal to 2,20 m;

— a hold-to-run control meeting the requirements of ISO 12643-1, if it is possible to observe the hazard points and hazard zones form the point of operation of the hold-to-run control;

— limiting the force of the movable glue bar to 300 N and the travel speed of the carriage to 15 m/min.

The control panel for operating the glue bar shall be provided with an emergency stop button.

#### 5.3.4 Knife

The cutting edge of the knife shall be safeguarded in the rest position.

#### 5.3.5 Pneumatic and hydraulic control systems

Where pneumatic or hydraulic control systems are used for starting the cutting cycle, a safety-rated check valve shall be supplied to ensure that the knife remains in the safe position in case of leakage or hose breakage.

#### 5.3.6 Frame edges

Where the machine frame of the splicer is lower than 2 m at the sides (as measured from the floor), frame edges shall be provided with black-yellow padding for protection against impacts.

#### 5.3.7 Splicers in elevated positions

If preparation of the movable suction bar cannot be accomplished from floor level, safe access shall be provided.

#### 5.3.8 Warning lights

A red warning light shall flash for 2 s prior to the initiation of the automatic splicing operation and during the entire period of automatic motion. The integration of the status lights into the control system may be single-channel, e.g. via an electronic control system.

### 5.4 Preheater

#### 5.4.1 In-running nips

The in-running nips between the wrap roller and the preheating cylinder, and between the wrap roller and fixed machine parts or guide rollers (see Figure 5), shall be safeguarded by one or more of the following measures:

— using the minimum distance of 120 mm;

— guarding in accordance with ISO 12643-1.

© ISO 2010 – All rights reserved

Documents
Document Sharing Hub
Full document details: BS ISO 12643-4:2010

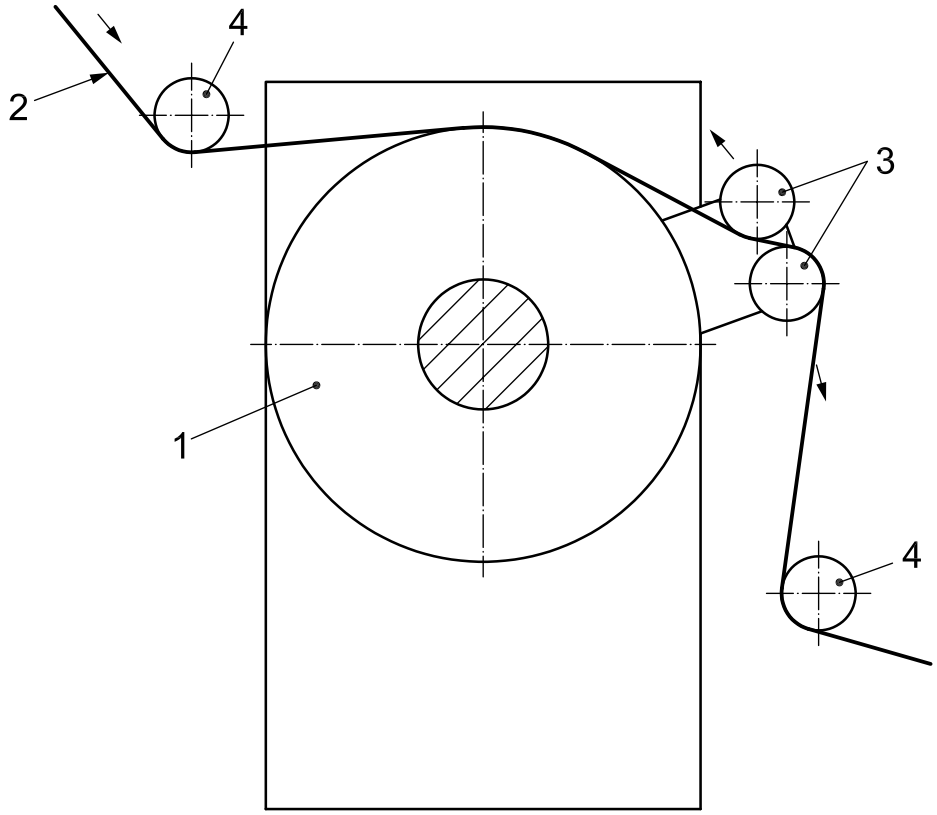


**Key**

1 preheating cylinder
2 paper web
3 wrap roller
4 guide roller

**Figure 5 — Preheater, side view**

### 5.4.2 In-running nips between preheating cylinder and cross beams

The in-running nips between the preheating cylinder and any cross beam shall be safeguarded by maintaining a minimum distance of 300 mm.

### 5.4.3 Wrap roller and wrap arms

The drives for the wrap roller shall be safeguarded by fixed guards completely enclosing the drives.

Rotating wrap arms (see Figure 6, item 2) shall be designed such that any openings in the wrap arms do not create a shearing hazard.

The distance (see Figure 6, $d$) between the preheating cylinder and the rotating arm shall be 6 mm or less or 30 mm or more.

The hazard point between the rotating arms and the machine side frame shall be safeguarded (see Figure 6, items 2 and 4) by one or both of the following measures:

— a hold-to-run control of at least $PL_r$ c of ISO 13849-1 or SIL 1 of IEC 62061 as specified in ISO 13849-1;

— a minimum distance of 120 mm and designing the rotating arm or machine side in such a way that parts of the body are deflected by the arm when rotating at its maximum circumferential speed of 5 m/min.


© ISO 2010 – All rights reserved
Documents
Document Sharing Hub
Full document details: BS ISO 12643-4:2010

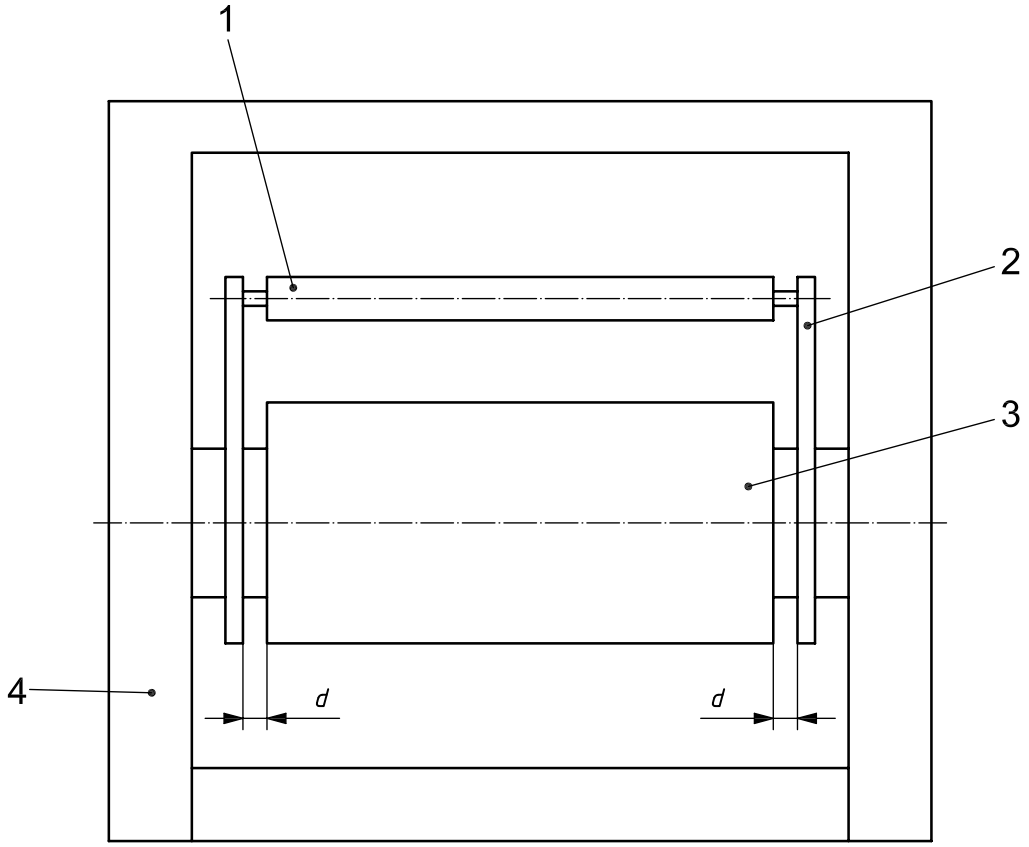


**Key**

1 wrap roller
2 rotating arm
3 preheating cylinder
4 machine frame
*d* distance between preheating cylinder and rotating arm

**Figure 6 — Preheater, feeding side**

### 5.4.4 Hot surfaces

As the temperature of preheating cylinders may be higher than 65 °C, warning signs indicating the hot surfaces shall be fitted to both sides of the preheater. Operators working near the preheater shall wear appropriate personal protection equipment to protect against burns.

### 5.4.5 Walkways

If walkways with fall-off protection are located near preheaters, the distance between the fall-off protection and movable parts of the preheater shall be at least 120 mm.

For fall-off protection and walkways, see ISO 12643-1.

## 5.5 Single facer

### 5.5.1 In-running nips

On single facers where the web is fed through a webbing slot, if it is impossible to apply the safety distances specified in ISO 13857 (as required by ISO 12643-1), a safety distance of 300 mm shall be observed for gaps with a width of more than 20 mm and less than or equal to 40 mm.

© ISO 2010 – All rights reserved

Documents
Document Sharing Hub
Full document details: BS ISO 12643-4:2010

The in-running nips between the corrugating rollers and fixed machine parts shall be safeguarded by fixed guards. The hazard point between the corrugating roller and the cross beam with scrapers is considered to be safeguarded if the clearance between the corrugating roller and the cross beam is at least 25 mm and the clearance between the scrapers is no more than 60 mm (see Figure 7).

Dimensions in millimetres

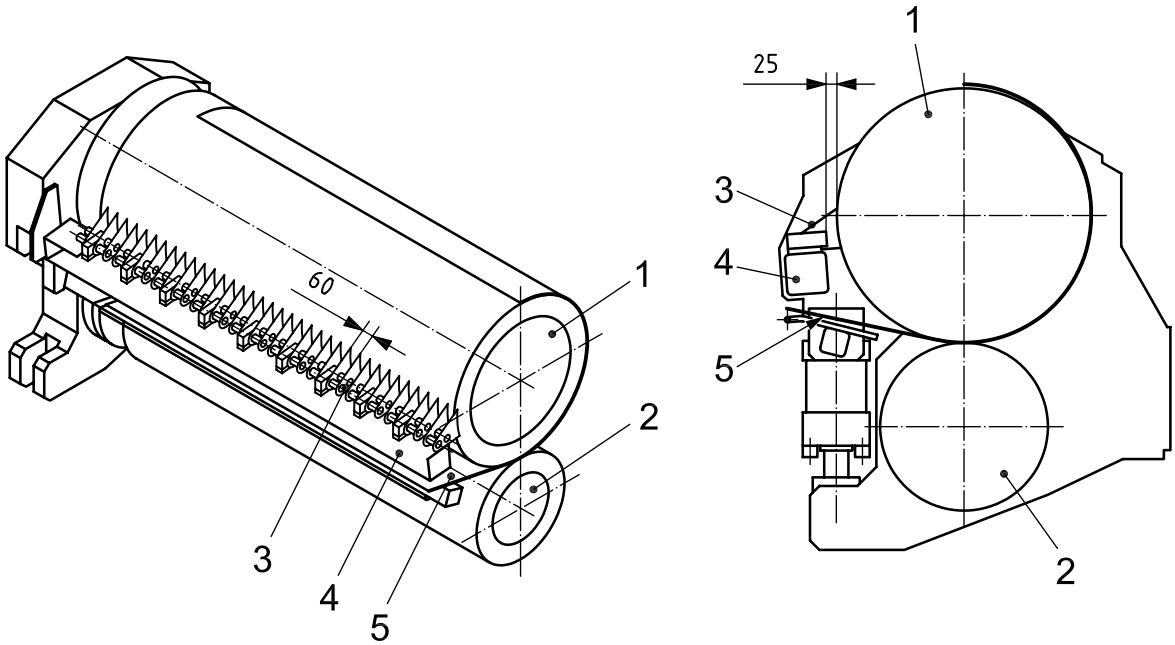


**Key**

1 upper corrugating roller
2 lower corrugating roller
3 scraper
4 cross beam
5 feeding of paper web

**Figure 7 — Corrugating rollers with scraper (front and side views)**

### 5.5.2 Corrugating rollers

Where corrugating rollers are removed for changing, means of transport shall be provided that allow easy and safe changing of rollers.

When noise enclosures are used, they shall be designed in such a way that loading and unloading of the corrugating rollers is not impeded.

### 5.5.3 Hazard points during roller change

Any hazard points that can be accessed after removal of, or during changing of, corrugating rollers shall be safeguarded in accordance with ISO 12643-1.

Where corrugating rollers are mounted on an indexing turret, any movement of the turret shall be under hold-to-run control with displacement limited to a maximum of 75 mm or with a maximum operating speed of 5 m/min.


© ISO 2010 – All rights reserved
Documents
Document Sharing Hub
Full document details: BS ISO 12643-4:2010

### 5.5.4 In-running nip between pressure roller or pressing belt and corrugating roller

The in-running nip between the pressure roller or pressing belt and the corrugating roller (see Figure 8) shall be safeguarded by fixed guards.

The crushing point created by the lowering of the pressure roller contacting the corrugating roller shall be safeguarded by a guard in accordance with ISO 12643-1 or by using a horizontal safety distance of 1 000 mm from the hazard point (see Figure 8).

In-running nips on the pressing belt shall be safeguarded by fixed guards.

### 5.5.5 Belt breakage

On the delivery side of the single-faced corrugated web (inclined belt conveyor side), a containment device shall be provided to eliminate the risk of injury in the case of belt breakage.

Dimensions in millimetres

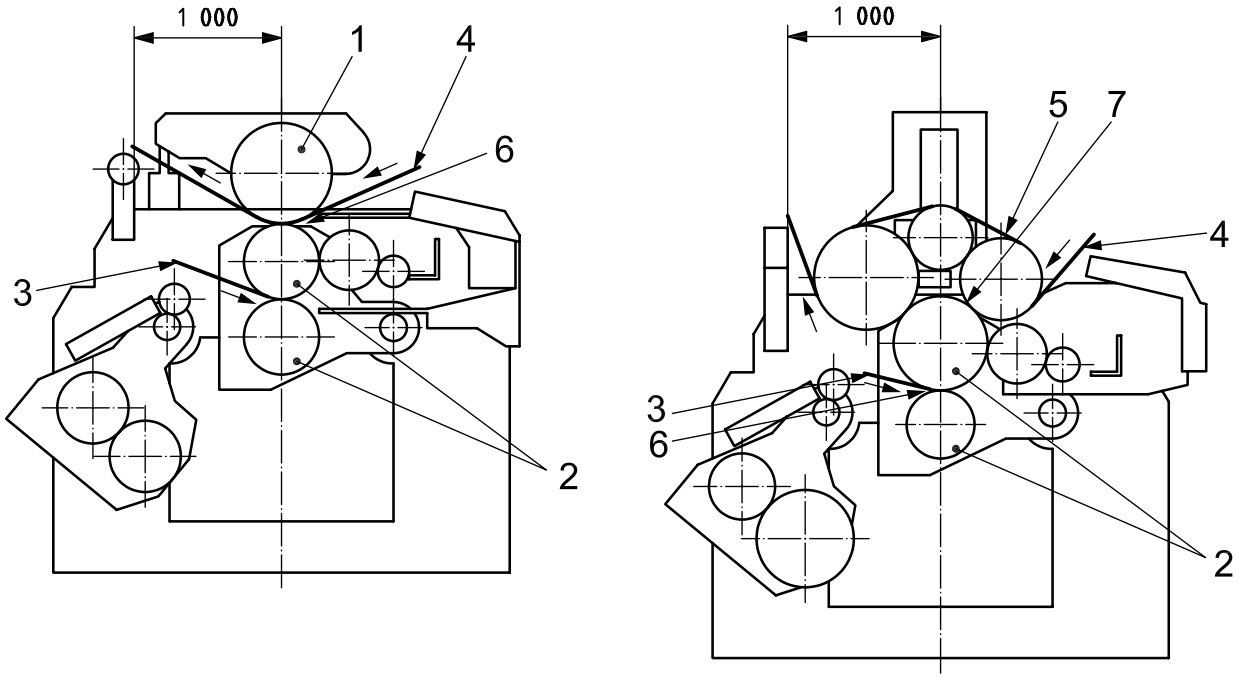


**a) Design using pressure roller** **b) Design using pressing belt**

**Key**

| | | | |
|---|---|---|---|
| 1 | pressure roller | 5 | pressing belt |
| 2 | corrugating rollers | 6 | in-running nip |
| 3 | corrugated web | 7 | in-running nip on pressing belt |
| 4 | liner | | |

**Figure 8 — Corrugating unit**

© ISO 2010 – All rights reserved

Documents
Document Sharing Hub
Full document details: BS ISO 12643-4:2010