BS ISO 12912:2014

BSI Standards Publication

Circular knitting machines — Vocabulary

bsi.

...making excellence a habit.™

Document Sharing Hub

National foreword

This British Standard is the UK implementation of ISO 12912:2014.

The UK participation in its preparation was entrusted to Technical Committee TCI/33, Textile machinery.

A list of organizations represented on this committee can be obtained on request to its secretary.

This publication does not purport to include all the necessary provisions of a contract. Users are responsible for its correct application.

© The British Standards Institution 2014. Published by BSI Standards Limited 2014

ISBN 978 0 580 67261 3

ICS 01.040.59; 59.120.40

Compliance with a British Standard cannot confer immunity from legal obligations.

This British Standard was published under the authority of the Standards Policy and Strategy Committee on 31 July 2014.

Amendments issued since publication

Date	Text affected

Documents
Document Sharing Hub

Full document details: BS ISO 12912:2014

INTERNATIONAL STANDARD

ISO 12912

First edition
2014-08-01

Circular knitting machines — Vocabulary

Métiers circulaires — Vocabulaire

Reference number
ISO 12912:2014(E)

Documents
Document Sharing Hub
© ISO 2014

Full document details: BS ISO 12912:2014

COPYRIGHT PROTECTED DOCUMENT

© ISO 2014

All rights reserved. Unless otherwise specified, no part of this publication may be reproduced or utilized otherwise in any form or by any means, electronic or mechanical, including photocopying, or posting on the internet or an intranet, without prior written permission. Permission can be requested from either ISO at the address below or ISO's member body in the country of the requester.

ISO copyright office
Case postale 56 • CH-1211 Geneva 20
Tel. + 41 22 749 01 11
Fax + 41 22 749 09 47
E-mail copyright@iso.org
Web www.iso.org

Published in Switzerland

© ISO 2014 – All rights reserved

Documents
Document Sharing Hub

Full document details: BS ISO 12912:2014

Contents

Page

Foreword ..... **iv**

1 Scope **1**

2 Terms and definitions **1**

2.1 Terms for circular knitting machines 1
2.2 Terms for construction features of circular knitting machine (according to number and classification of needle carrier) 2
2.3 Dimensions 5
2.4 Terms for rotation 8
2.5 Machine frame and drive 9
2.6 Stitch forming elements, holder for needles and other stitch forming elements 9
2.7 Needle control 11
2.8 Cam system 11
2.9 Yarn feed and monitoring system 15
2.10 Fabric take-down 15
2.11 Pattern equipment 17
2.12 Machine control system and monitoring 18
2.13 Lubrication and cleaning system, safety device and special attachments 18

Bibliography **19**

© ISO 2014 – All rights reserved

Documents
Document Sharing Hub
Full document details: BS ISO 12912:2014

Foreword

ISO (the International Organization for Standardization) is a worldwide federation of national standards bodies (ISO member bodies). The work of preparing International Standards is normally carried out through ISO technical committees. Each member body interested in a subject for which a technical committee has been established has the right to be represented on that committee. International organizations, governmental and non-governmental, in liaison with ISO, also take part in the work. ISO collaborates closely with the International Electrotechnical Commission (IEC) on all matters of electrotechnical standardization.

The procedures used to develop this document and those intended for its further maintenance are described in the ISO/IEC Directives, Part 1. In particular the different approval criteria needed for the different types of ISO documents should be noted. This document was drafted in accordance with the editorial rules of the ISO/IEC Directives, Part 2 (see www.iso.org/directives).

Attention is drawn to the possibility that some of the elements of this document may be the subject of patent rights. ISO shall not be held responsible for identifying any or all such patent rights. Details of any patent rights identified during the development of the document will be in the Introduction and/or on the ISO list of patent declarations received (see www.iso.org/patents).

Any trade name used in this document is information given for the convenience of users and does not constitute an endorsement.

For an explanation on the meaning of ISO specific terms and expressions related to conformity assessment, as well as information about ISO's adherence to the WTO principles in the Technical Barriers to Trade (TBT) see the following URL: Foreword - Supplementary information

The committee responsible for this document is ISO/TC 72, *Textile machinery and accessories*, Subcommittee SC 3, *Machinery for fabric manufacturing including preparatory machinery and accessories*.

© ISO 2014 – All rights reserved
Documents
Document Sharing Hub
Full document details: BS ISO 12912:2014

INTERNATIONAL STANDARD ISO 12912:2014(E)

Circular knitting machines — Vocabulary

1 Scope

This International Standard establishes a vocabulary of terms and a system of classification for circular knitting machines used in the textile industry for the production of weft-knitted fabrics.

NOTE See also the ISO online browsing platform (OBP): https://www.iso.org/obp/ui/

2 Terms and definitions

2.1 Terms for circular knitting machines

2.1.1
circular knitting machine
machine for the production of knitted fabrics with independent needles, longitudinally movable, in circular arrangement, with stitches formed one after the other within every course from yarn fed crosswise to the length of the fabric

[SOURCE: ISO 7839:2005, 2.1.2]

Note 1 to entry: The circular knitting machine can be specified more precisely with the following details:

— model (e.g. small, large);

— construction features (e.g. single jersey, double jersey, plain interlock, purl);

— needle type (e.g. latch or slide needle);

— number of feeders (e.g. 48 stitch feeders);

— patterning mechanism (e.g. jacquard unit).

2.1.2
small-diameter circular knitting machine
circular knitting machine with nominal diameter up to 165 mm

2.1.3
large-diameter circular knitting machine
circular knitting machine with nominal diameter of over 165 mm

© ISO 2014 – All rights reserved

Documents
Document Sharing Hub
Full document details: BS ISO 12912:2014

2.2 Terms for construction features of circular knitting machine (according to number and classification of needle carrier)

2.2.1
RL circular knitting machine
circular knitting machine for the production of single-face fabrics (RL) by means of needles arranged in grooves of one carrier

[SOURCE: ISO 7839:2005, 2.1.2.1]

Note 1 to entry: See Figure 1.

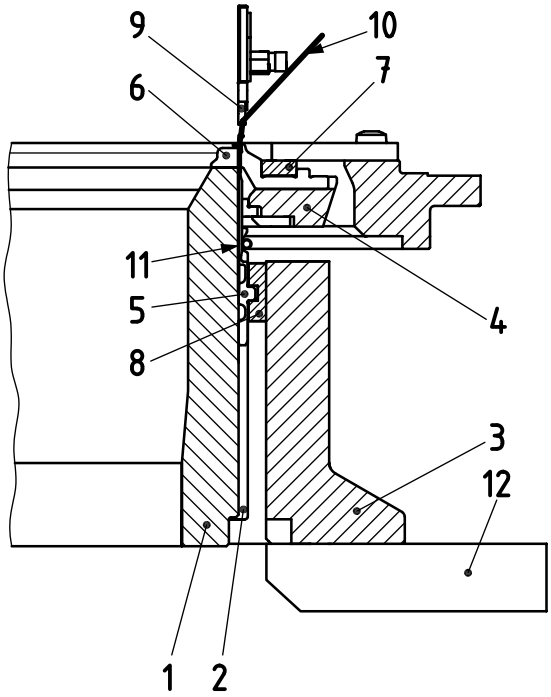

Key

1	needle cylinder	7	sinker cam
2	trick	8	needle cam
3	cylinder cam box	9	yarn guide
4	sinker ring	10	yarn
5	needle	11	holding spring
6	sinker	12	cam box plate

Figure 1 — RL circular knitting machine

2.2.2
RR circular knitting machine
circular knitting machine, used mainly for the production of double-face fabrics (RR) by means of needles arranged in an axial direction in grooves of the needle cylinder and radially in grooves of the needle disc (dial) in staggered formation to one another

[SOURCE: ISO 7839:2005, 2.1.2.2]

Note 1 to entry: See Figure 2.

© ISO 2014 – All rights reserved
Documents
Document Sharing Hub
Full document details: BS ISO 12912:2014

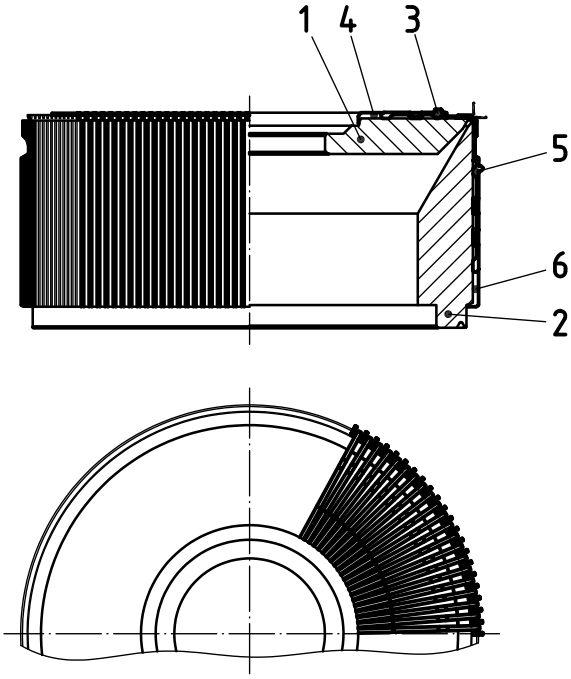

Key

1 needle disc
2 needle cylinder
3 disc needle
4 trick
5 cylinder needle
6 trick

Figure 2 — Construction features RR circular knitting machine

2.2.3
interlock circular knitting machine
interlock knitting machine used for the production of plain interlock fabric with needles arranged opposite each other in needle cylinder grooves in the axial direction and radial in needle disc (dial) grooves

Note 1 to entry: See Figure 3.

© ISO 2014 – All rights reserved

Documents
Document Sharing Hub
Full document details: BS ISO 12912:2014