BS ISO 13006:2018

BSI Standards Publication

Ceramic tiles — Definitions, classification, characteristics and marking

Documents
Document Sharing Hub

Full document details: BS ISO 13006:2018

National foreword

This British Standard is the UK implementation of ISO 13006:2018.

The UK participation in its preparation was entrusted to Technical Committee B/539, Ceramic tiles and other rigid tiling.

A list of organizations represented on this committee can be obtained on request to its secretary.

This publication does not purport to include all the necessary provisions of a contract. Users are responsible for its correct application.

© The British Standards Institution 2018
Published by BSI Standards Limited 2018

ISBN 978 0 580 92678 5

ICS 01.040.91; 91.100.23

Compliance with a British Standard cannot confer immunity from legal obligations.

This British Standard was published under the authority of the Standards Policy and Strategy Committee on 30 September 2018.

Amendments/corrigenda issued since publication

Date	Text affected

Documents
Document Sharing Hub

Full document details: BS ISO 13006:2018

INTERNATIONAL STANDARD

ISO 13006

Third edition
2018-09

Ceramic tiles — Definitions, classification, characteristics and marking

Carreaux et dalles céramiques — Définitions, classification, caractéristiques et marquage

Reference number
ISO 13006:2018(E)

Documents
Document Sharing Hub

© ISO 2018

Full document details: BS ISO 13006:2018

COPYRIGHT PROTECTED DOCUMENT

© ISO 2018

All rights reserved. Unless otherwise specified, or required in the context of its implementation, no part of this publication may be reproduced or utilized otherwise in any form or by any means, electronic or mechanical, including photocopying, or posting on the internet or an intranet, without prior written permission. Permission can be requested from either ISO at the address below or ISO's member body in the country of the requester.

ISO copyright office
CP 401 • Ch. de Blandonnet 8
CH-1214 Vernier, Geneva
Phone: +41 22 749 01 11
Fax: +41 22 749 09 47
Email: copyright@iso.org
Website: www.iso.org

Published in Switzerland

© ISO 2018 – All rights reserved

Documents
Document Sharing Hub

Full document details: BS ISO 13006:2018

Contents

Page

Foreword ... **iv**

1 Scope ... **1**

2 Normative references ... **1**

3 Terms and definitions ... **2**

4 Classification ... **4**
- 4.1 Basis of classification ... 4
- 4.2 Methods of manufacture ... 4
- 4.3 Water absorption according to group ... 4
  - 4.3.1 General ... 4
  - 4.3.2 Subdivision of the three groups ... 4

5 Characteristics ... **5**

6 Sampling and basis for acceptance ... **5**

7 Requirements ... **5**

8 Marking and specifications ... **5**
- 8.1 Marking ... 5
- 8.2 Product literature ... 6
- 8.3 Specifications ... 6

9 Ordering ... **7**

Annex A (normative) **Extruded ceramic tiles with low water absorption 0,5 < E_v ≤ 3 % Group AI_b** ... **10**

Annex B (normative) **Extruded ceramic tiles 3 % < E_v ≤ 6 % Group AII_a — Subgroup (Part) 1** ... **13**

Annex C (normative) **Extruded ceramic tiles 3 % < E_v ≤ 6 % Group AII_a — Subgroup (Part) 2** ... **16**

Annex D (normative) **Extruded ceramic tiles 6 % < E_v ≤ 10 % Group AII_b — Subgroup (Part) 1** ... **19**

Annex E (normative) **Extruded ceramic tiles 6 % < E_v ≤ 10 % Group AII_b — Subgroup (Part) 2** ... **22**

Annex F (normative) **Extruded ceramic tiles E_v > 10 % Group AIII** ... **25**

Annex G (normative) **Dry-pressed ceramic tiles with low water absorption E_v ≤ 0,5 % Group BI_a** **28**

Annex H (normative) **Dry-pressed ceramic tiles with low water absorption 0,5 % < E_v ≤ 3 % Group BI_b** ... **32**

Annex I (informative) **Intentionally blank** ... **35**

Annex J (normative) **Dry-pressed ceramic tiles 3 % < E_v ≤ 6 % Group BII_a** ... **36**

Annex K (normative) **Dry-pressed ceramic tiles 6 % < E_v ≤ 10 % Group BII_b** ... **39**

Annex L (normative) **Dry-pressed ceramic tiles E_v > 10 % Group BIII** ... **42**

Annex M (normative) **Extruded ceramic tiles with low water absorption E_v ≤ 0,5 % Group AI_a** ... **45**

Annex N (informative) **Classification of glazed tiles for floors according to their abrasion resistance** ... **48**

Annex O (informative) **Intentionally blank** ... **49**

Annex P (informative) **Test methods** ... **50**

Annex Q (informative) **Intentionally blank** ... **51**

Annex R (informative) **Symbols recommended for use** ... **52**

Bibliography ... **53**

Documents
Document Sharing Hub

© ISO 2018 – All rights reserved

Full document details: BS ISO 13006:2018

Foreword

ISO (the International Organization for Standardization) is a worldwide federation of national standards bodies (ISO member bodies). The work of preparing International Standards is normally carried out through ISO technical committees. Each member body interested in a subject for which a technical committee has been established has the right to be represented on that committee. International organizations, governmental and non-governmental, in liaison with ISO, also take part in the work. ISO collaborates closely with the International Electrotechnical Commission (IEC) on all matters of electrotechnical standardization.

The procedures used to develop this document and those intended for its further maintenance are described in the ISO/IEC Directives, Part 1. In particular the different approval criteria needed for the different types of ISO documents should be noted. This document was drafted in accordance with the editorial rules of the ISO/IEC Directives, Part 2 (see www.iso.org/directives).

Attention is drawn to the possibility that some of the elements of this document may be the subject of patent rights. ISO shall not be held responsible for identifying any or all such patent rights. Details of any patent rights identified during the development of the document will be in the Introduction and/or on the ISO list of patent declarations received (see www.iso.org/patents).

Any trade name used in this document is information given for the convenience of users and does not constitute an endorsement.

For an explanation of the voluntary nature of standards, the meaning of ISO specific terms and expressions related to conformity assessment, as well as information about ISO's adherence to the World Trade Organization (WTO) principles in the Technical Barriers to Trade (TBT) see: www.iso.org/iso/foreword.html.

This document was prepared by ISO/TC 189, *Ceramic tile*.

This third edition cancels and replaces the second edition (ISO 13006:2012), which has been technically revised.

This main changes compared to the previous edition are as follows:

— The boiling method in ISO 10545-3 is no longer referenced for the determination of water absorption. The vacuum method is now referenced for the determination of water absorption.

Any feedback or questions on this document should be directed to the user's national standards body. A complete listing of these bodies can be found at www.iso.org/members.html.

© ISO 2018 – All rights reserved
Documents
Document Sharing Hub
Full document details: BS ISO 13006:2018

Ceramic tiles — Definitions, classification, characteristics and marking

1 Scope

This document defines terms and establishes classifications, characteristics and marking requirements for ceramic tiles of the best commercial quality (first quality). This document is not applicable to tiles made by other than normal processes of extrusion or dry pressing. It is not applicable to decorative accessories or trim such as edges, corners, skirting, capping, coves, beads, steps, curved tiles and other accessory pieces or mosaics (i.e. any piece that can fit into a square, the side of which is less than 7 cm).

NOTE ISO 10545 (all parts) describes the test procedures required to determine the product characteristics listed in this document. ISO 10545 is a multi-part standard, each part describes a specific test procedure or related matter.

2 Normative references

The following documents are referred to in the text in such a way that some or all of their content constitutes requirements of this document. For dated references, only the edition cited applies. For undated references, the latest edition of the referenced document (including any amendments) applies.

ISO 1006, *Building construction — Modular coordination — Basic module*

ISO 10545-1, *Ceramic tiles — Part 1: Sampling and basis for acceptance*

ISO 10545-2, *Ceramic tiles — Part 2: Determination of dimensions and surface quality*

ISO 10545-3, *Ceramic tiles — Part 3: Determination of water absorption, apparent porosity, apparent relative density and bulk density*

ISO 10545-4, *Ceramic tiles — Part 4: Determination of modulus of rupture and breaking strength*

ISO 10545-5, *Ceramic tiles — Part 5: Determination of impact resistance by measurement of coefficient of restitution*

ISO 10545-6, *Ceramic tiles — Part 6: Determination of resistance to deep abrasion for unglazed tiles*

ISO 10545-7, *Ceramic tiles — Part 7: Determination of resistance to surface abrasion for glazed tiles*

ISO 10545-8, *Ceramic tiles — Part 8: Determination of linear thermal expansion*

ISO 10545-9, *Ceramic tiles — Part 9: Determination of resistance to thermal shock*

ISO 10545-10, *Ceramic tiles — Part 10: Determination of moisture expansion*

ISO 10545-11, *Ceramic tiles — Part 11: Determination of crazing resistance for glazed tiles*

ISO 10545-12, *Ceramic tiles — Part 12: Determination of frost resistance*

ISO 10545-13, *Ceramic tiles — Part 13: Determination of chemical resistance*

ISO 10545-14, *Ceramic tiles — Part 14: Determination of resistance to stains*

ISO 10545-15, *Ceramic tiles — Part 15: Determination of lead and cadmium given off by glazed tiles*

ISO 10545-16, *Ceramic tiles — Part 16: Determination of small colour differences*

Documents
Document Sharing Hub

© ISO 2018 – All rights reserved

Full document details: BS ISO 13006:2018

3 Terms and definitions

For the purposes of this document, the terms and definitions given in ISO 1006 and the following apply.

ISO and IEC maintain terminological databases for use in standardization at the following addresses:

— IEC Electropedia: available at https://www.electropedia.org/

— ISO Online browsing platform: available at https://www.iso.org/obp

3.1
ceramic tile
thin slab made from clays and/or other inorganic raw materials, generally used as covering for floors and walls, usually shaped by extruding (A) or pressing (B) at room temperature, but may be formed by other processes (C), then dried and subsequently fired at temperatures sufficient to develop the required properties

Note 1 to entry: Tiles may be glazed (GL) or unglazed (UGL); they are incombustible and are not affected by light.

3.2
porcelain tile
fully vitrified tile with water absorption coefficient less than or equal to a mass fraction of 0,5 %, belonging to groups AI_a and BI_a

3.3
glaze
vitrified covering that is impermeable

3.4
engobed surface
clay-based covering with a matt finish which may be permeable or impermeable

Note 1 to entry: A tile with an engobed surface is regarded as an unglazed tile.

3.5
polished surface
surface of glazed and unglazed tile which has been given a glossy finish by mechanical polishing as the last stage of manufacture

3.6
extruded tile
tile, whose body is shaped in the plastic state in an extruder, the column obtained being cut into tiles of pre-determined dimension, and which is designated as Group A

Note 1 to entry: This document classifies extruded tiles as “precision” or “natural”. The classification is dependent upon the different technical characteristics as listed in the individual product standards.

Note 2 to entry: Traditional terms used for extruded products are “split tiles” and “quarry tiles”. They commonly indicate double-extruded and single-extruded tiles, respectively. The term “quarry tiles” only refers to extruded tiles with a water absorption coefficient of a mass fraction not exceeding 6 %.

3.7
dry-pressed tile
tile, formed from a finely milled body mixture and shaped (e.g. in dies or moulds) at high pressure, and which is designated as Group B

3.8
water absorption
E_v
percentage of water impregnating a tile

Note 1 to entry: This is measured in accordance with ISO 10545-3.

© ISO 2018 – All rights reserved
Documents
Document Sharing Hub
Full document details: BS ISO 13006:2018

Note 2 to entry: Water absorption is expressed as a mass fraction of dry mass.

3.9 Sizes

Note 1 to entry The sizes are only defined for rectangular tiles. If the sizes of non-rectangular tiles are required, they are defined by the smallest rectangle into which they fit.

3.9.1
nominal size
size used to describe the product

Note 1 to entry: See Figures 1 and 2.

3.9.2
work size
size of a tile specified for manufacturing to which the actual size shall conform within specified permissible deviations

Note 1 to entry: See Figures 1 and 2.

3.9.3
actual size
size obtained by measuring the face of a tile

Note 1 to entry: This is measured in accordance with ISO 10545-2.

Note 2 to entry: See Figures 1 and 2.

3.9.4
coordinating size
work size plus the joint width

Note 1 to entry: See Figures 1 and 2.

3.9.5
modular size
tile and size based on module M, 2 M, 3 M and 5 M and also their multiples or subdivisions, except for tiles with a surface area of less than 9 000 mm^2

Note 1 to entry: See ISO 1006, where 1 M = 100 mm.

Note 2 to entry: See Figures 1 and 2.

3.9.6
non-modular size
size not based on module M

Note 1 to entry: See ISO 1006, where 1 M = 100 mm.

Note 2 to entry: Tiles of these sizes are those commonly used in most countries.

Note 3 to entry: See Figures 1 and 2.

3.9.7
tolerance
difference between the permissible limits of size

Note 1 to entry: See Figures 1 and 2.

© ISO 2018 – All rights reserved

Documents
Document Sharing Hub
Full document details: BS ISO 13006:2018

3.10
spacer lug
projection that is located along certain edges of tiles so that where two tiles are placed together, in line, the lugs on adjacent edges separate the tiles by a distance of not less than the specified width of the joint

Note 1 to entry: See Figure 2.

3.11
rectified tile
ceramic tile that, after firing, is subjected to a precise mechanical finishing of the edges

3.12
back feet
parallel ridges running across the back surface of some exterior wall tiles which possess a geometry intended to facilitate an interlocking connection between tile and cement mortar

Note 1 to entry: See Figure 3.

Note 2 to entry: Back feet dimensions shall be measured with vernier calipers, and each specimen in a 10-tile sample is required to satisfy the requirements in Annexes A to H and Annexes J to M.

4 Classification

4.1 Basis of classification

Ceramic tiles are divided into groups according to their method of manufacture and their water absorption (see 3.8 and Table 1). The groups do not presuppose the usage of the products.

4.2 Methods of manufacture

The following are the two methods of manufacture:

— method A, extruded tiles (see 3.6);

— method B, dry-pressed tiles (see 3.7).

4.3 Water absorption according to group

4.3.1 General

The following are the three groups according to water absorption, E_v.

4.3.2 Subdivision of the three groups

The three groups are divided into tiles of low, medium and high water absorption, namely Groups I, II and III, respectively.

a) Tiles of low water absorption, i.e. absorption coefficient less than or equal to a mass fraction of 3 %, $E_v \leq 3$ %, belong to Group I. Group I consists of the following:

   1) for extruded tiles

      i) $E_v \leq 0{,}5$ % (Group AI_a), and

      ii) $0{,}5\ \% < E_v \leq 3$ % (Group AI_b);

   2) for dry-pressed tiles:

      i) $E_v \leq 0{,}5$ % (Group BI_a);

© ISO 2018 – All rights reserved
Documents
Document Sharing Hub
Full document details: BS ISO 13006:2018

ii) 0,5 % < E_v ≤ 3 % (Group BI_b).

b) Tiles of medium water absorption, i.e. 3 % < E_v ≤ 10 %, belong to Group II. Group II consists of the following:

1) for extruded tiles

i) 3 % < E_v ≤ 6 % [Group AII_a, Subgroups (Parts) 1 and 2; see Annex B for Subgroup (Part) 1 or Annex C for Subgroup (Part) 2], and

ii) 6 % < E_v ≤ 10 % [Group AII_b, Subgroups (Parts) 1 and 2; see Annex D for Subgroup (Part) 1 or Annex E for Subgroup (Part) 2];

2) for dry-pressed tiles

i) 3 % < E_v ≤ 6 % (Group BII_a), and

ii) 6 % < E_v ≤ 10 % (Group BII_b).

c) Tiles of high water absorption, i.e. E_v > 10 %, belong to Group III.

5 Characteristics

The characteristics for different applications of ceramic tiles are given in Table 2.

6 Sampling and basis for acceptance

The sampling and basis for acceptance shall be in accordance with that presented in ISO 10545-1.

7 Requirements

Dimensional and surface quality requirements and physical and chemical properties shall be as given in the relevant/specific annex, of Annexes A to H and Annexes J to M, for each tile class.

NOTE Annexes I, O and Q are intentionally left blank. This is as a convenience to producers in order to avoid changes to packaging and related costs. In addition, at the time of publication, the market offers consumers various products identified by the matching annex headings of this document.

8 Marking and specifications

8.1 Marking

Tiles and/or their packaging are required to bear the following marking:

a) manufacturer's mark and/or trademark and the country where the tile was manufactured (i.e. country of origin, as determined by the relevant international regulation);

b) indication of first quality;

c) type of tile and reference to the appropriate group and/or annex of Annexes A to H and Annexes J to M covering the specific group of tile;

d) nominal and work sizes, and "M" if modular;

e) nature of the surface, i.e. glazed (GL) or unglazed (UGL);

f) any surface treatment applied after firing;

g) total number of tiles in the package;

© ISO 2018 – All rights reserved

Documents
Document Sharing Hub
Full document details: BS ISO 13006:2018

h) manufacturer's production run or batch number;

i) an indication of colour consistency, as defined by the manufacturer;

j) total dry weight which the tiles and their packaging shall not exceed.

EXAMPLE 1

The ABC Tile Co., Made in China, Ceramic Tile of First Quality
Extruded tile, ISO 13006:2018, Annex A, Group Al_b, Precision
M, 25 cm × 12,5 cm (S_w 240 mm × 115 mm × 12,5 mm), UGL, Protective Sealer Added
20 pcs/box, batch A50, 0100-Gray, Max dry weight: 20 kg

EXAMPLE 2

The 123 Tile Co., Made in Spain, Ceramic Tile of First Quality
Dry-pressed porcelain tile, ISO 13006:2018, Annex G, Group BI_a, Rectified
60 cm × 60 cm (S_w 598 mm × 598 mm × 10 mm) UGL
3 pcs/box, batch B52, 0590-Slate, Max dry weight: 16 kg

EXAMPLE 3

The XYX Tile Co., Made in Indonesia, Ceramic Tile of First Quality
Dry-pressed tile, ISO 13006:2018, Annex H, Group BI_b Non-rectified
30 cm × 30 cm (S_w 299 mm × 299 mm × 10 mm) GL
10 pcs/box, batch C60, 0320-Ivory, Max dry weight: 20 kg

Each tile conforming to this document is required to bear on its reverse side or edge, the country where it was manufactured.

8.2 Product literature

Product literature for tiles intended for use on floors shall state the abrasion class or the place of use of glazed tiles.

8.3 Specifications

Tiles shall be designated by the following:

a) the method of shaping;

b) the relevant group and/or annex of Annexes A to H and Annexes J to M covering the specific group of tile

c) nominal and work sizes, and "M" if modular;

d) the nature of the surface, i.e. glazed (GL) or unglazed (UGL);

e) the addition of back feet, if required.

EXAMPLE 1 Precision extruded tile, ISO 13006:2018, Annex M, AIa M 25 cm × 12,5 cm (S_w 240 mm × 115 mm × 10 mm) GL.

EXAMPLE 2 Natural extruded tile, ISO 13006:2018, Annex A, AIb 15 cm × 15 cm (S_w 150 mm × 150 mm × 12,5 mm) UGL.

EXAMPLE 3 Dry-pressed tile, ISO 13006:2018, Annex G, BI_a M 25 cm × 12,5 cm (S_w 240 mm × 115 mm × 10 mm) GL.

EXAMPLE 4 Dry-pressed tile, ISO 13006:2018, Annex L, BIII 15 cm × 15 cm (S_w 150 mm × 150 mm × 12,5 mm) UGL.

© ISO 2018 – All rights reserved
Documents
Document Sharing Hub
Full document details: BS ISO 13006:2018

9 Ordering

Each time that an order is placed, items, such as size, thickness, type of surface, colour, profile, abrasion class for glazed tiles and other properties, shall be agreed upon by the parties concerned.

Table 1 — Classification of ceramic tiles with respect to water absorption and shaping

Shaping	Group I $E_v \leq 3$ %	Group II_a $3\ \% < E_v \leq 6\ \%$	Group II_b $6\ \% < E_v \leq 10\ \%$	Group III $E_v > 10$ %
A Extruded	Group AI_a $E_v \leq 0{,}5$ % (see Annex M)	Group $AII_{a\text{-}1}$[a] (see Annex B)	Group $AII_{b\text{-}1}$[a] (see Annex D)	Group AIII (see Annex F)
	Group AI_b $0{,}5\ \% < E_v \leq 3$ % (see Annex A)	Group $AII_{a\text{-}2}$[a] (see Annex C)	Group $AII_{b\text{-}2}$[a] (see Annex E)	
B Dry pressed	Group BI_a $E_v \leq 0{,}5$ % (see Annex G)	Group BII_a (see Annex J)	Group BII_b (see Annex K)	Group BIII[b] (see Annex L)
	Group BI_b $0{,}5\ \% < E_v \leq 3$ % (see Annex H)			

[a] Groups AII_a and AII_b are divided into two subgroups (Parts 1 and 2) with different product specifications.

[b] Group BIII covers glazed tiles only. There is a low quantity of dry-pressed unglazed tiles produced with water absorption greater than 10 % mass fraction, which is not covered by this product group.

Table 2 — Characteristics required for different applications

Characteristics	Floor		Wall		Test
Dimensions and surface quality	**Interior**	**Exterior**	**Interior**	**Exterior**	**Reference**
Length and width	X	X	X	X	ISO 10545-2
Thickness	X	X	X	X	ISO 10545-2
Straightness of sides	X	X	X	X	ISO 10545-2
Rectangularity	X	X	X	X	ISO 10545-2
Surface flatness (curvature and warpage)	X	X	X	X	ISO 10545-2
Surface quality	X	X	X	X	ISO 10545-2
Back feet (if specified)[a]				X	Figure 3
Physical property	**Interior**	**Exterior**	**Interior**	**Exterior**	**Reference**
Water absorption	X	X	X	X	ISO 10545-3
Breaking strength	X	X	X	X	ISO 10545-4
Modulus of rupture	X	X	X	X	ISO 10545-4
Resistance to deep abrasion — unglazed tiles	X	X			ISO 10545-6
Resistance to surface abrasion — glazed tiles	X	X			ISO 10545-7
Linear thermal expansion[b]	X	X	X	X	ISO 10545-8
Resistance to thermal shock[b]	X	X	X	X	ISO 10545-9
Resistance to crazing — glazed tiles	X	X	X	X	ISO 10545-11
Frost resistance [c]		X		X	ISO 10545-12
Moisture expansion[b]	X	X	X	X	ISO 10545-10
Small colour differences[b]	X	X	X	X	ISO 10545-16

© ISO 2018 – All rights reserved

AVA Documents Document Sharing Hub
Full document details: BS ISO 13006:2018

Table 2 *(continued)*

Characteristics	Floor		Wall		Test
Dimensions and surface quality	**Interior**	**Exterior**	**Interior**	**Exterior**	**Reference**
Impact resistance[b]	X	X			ISO 10545-5
Chemical property	**Interior**	**Exterior**	**Interior**	**Exterior**	**Reference**
Resistance to staining					ISO 10545-14
— glazed tiles	X	X	X	X	ISO 10545-14
— unglazed tiles[b]	X	X	X	X	ISO 10545-14
Resistance to low concentrations of acids and alkalis	X	X	X	X	ISO 10545-13
Resistance to high concentrations of acids and alkalis[b]	X	X	X	X	ISO 10545-13
Resistance to household cleaners and swimming pool salts	X	X	X	X	ISO 10545-13
Lead and cadmium release — glazed tiles[b]	X	X	X	X	ISO 10545-15

[a] For application to exterior tiles installed by cement mortar, including tunnels, where back feet are specified.

[b] Test method is available.

[c] For tiles intended to be used in situations where frost conditions apply.

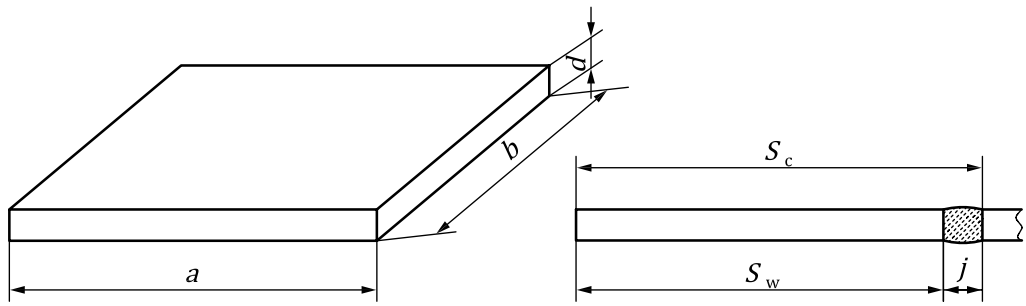

Key

a, *b* dimensions of the tile

d thickness

j joint

S_c coordinating size

S_w work size

$S_c = S_w + j$

$S_w = a, b, d$

Figure 1 — Tile

© ISO 2018 – All rights reserved

Documents
Document Sharing Hub

Full document details: BS ISO 13006:2018

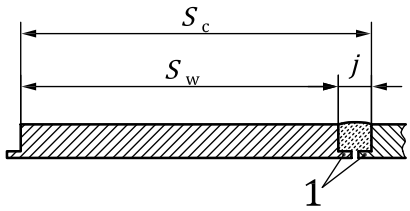

Key

1 spacer lugs

j joint

S_c coordinating size

S_w work size

$S_c = S_w + j$

$S_w = a, b, d$

Figure 2 — Tile with spacer lug

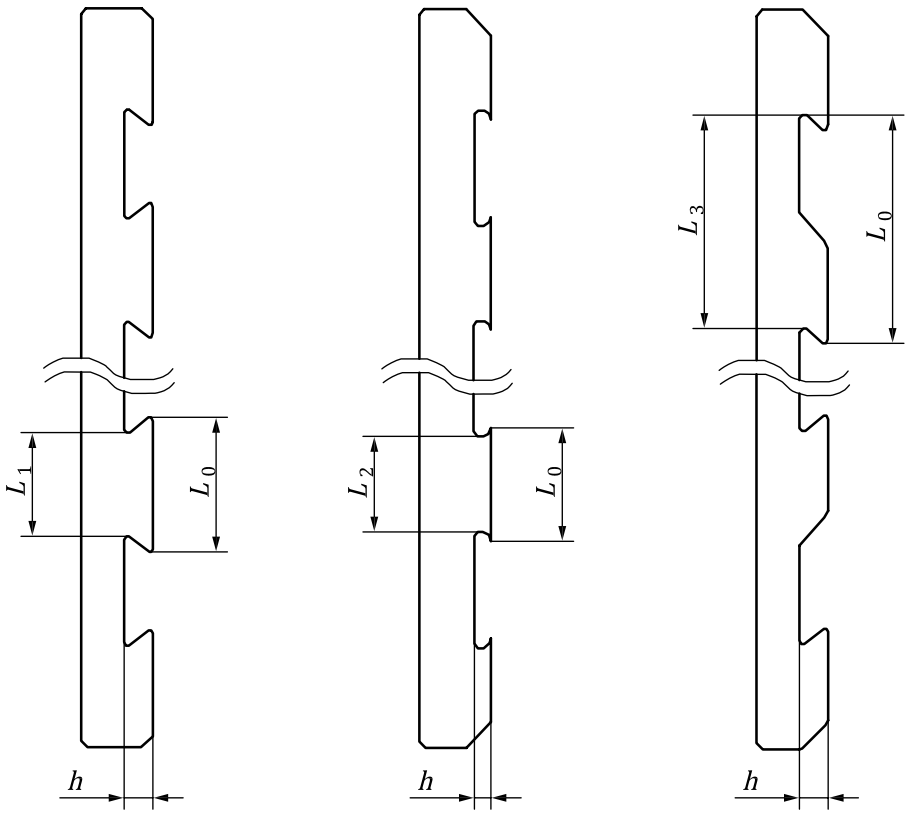

a) Example 1 **b) Example 2** **c) Example 3**

Key

h height

L length

Figure 3 — Back feet — Examples

© ISO 2018 – All rights reserved

Documents
Document Sharing Hub
Full document details: BS ISO 13006:2018

Annex A
(normative)

Extruded ceramic tiles with low water absorption 0,5 < E_v ≤ 3 % Group AI_b

Dimensional and surface quality requirements and physical and chemical properties are required to be in accordance with Table A.1.

Table A.1 — Requirements for extruded ceramic tiles — Group AI_b, 0,5 < E_v ≤ 3 %

Dimensions and surface quality	Precision	Natural	Test
Length and width			
The manufacturer shall choose the work size as follows: a) for modular tiles in order to allow a nominal joint width of between 3 mm and 11 mm[a]; b) for non-modular tiles so that the difference between the work size and the nominal size is not more than ±3 mm.			
The deviation, in percent, of the average size for each tile (two or four sides) from the work size, S_w	±1,0 % to a maximum of ±2 mm	±2,0 % to a maximum of ±4 mm	ISO 10545-2
The deviation, in percent, of the average size for each tile (two or four sides) from the average size of the 10 test specimens (20 or 40 sides)	±1,0 %	±1,5 %	ISO 10545-2
Thickness			
a) The thickness shall be specified by the manufacturer[g]			
b) The deviation, in percent, of the average thickness of each tile from the work size thickness[g]	±10 %	±10 %	ISO 10545-2
Straightness of sides[b] (facial sides)			
The maximum deviation from straightness, in percent, related to the corresponding work sizes	±0,5 %	±0,6 %	ISO 10545-2
Rectangularity[b]			
The maximum deviation from rectangularity, in percent, related to the corresponding work sizes	±1,0 %	±1,0 %	ISO 10545-2
Surface flatness			
The maximum deviation from flatness, in percent:			
a) centre curvature, related to diagonal calculated from the work sizes;	±0,5 %	±1,5 %	ISO 10545-2
b) edge curvature, related to the corresponding work sizes;	±0,5 %	±1,5 %	ISO 10545-2

© ISO 2018 – All rights reserved
Documents
Document Sharing Hub
Full document details: BS ISO 13006:2018

Table A.1 *(continued)*

Dimensions and surface quality	Precision	Natural	Test
c) warpage, related to the diagonal calculated from the work sizes.	±0,8 %	±1,5 %	ISO 10545-2
Back feet (if specified)			
a) Height, h, for tiles of surface area, A			
49 cm^2 ≤ A < 60 cm^2	Minimum h = 0,7 mm; Maximum h = 3,5 mm		Figure 3
A ≥ 60 cm^2	Minimum h = 1,5 mm; Maximum h = 3,5 mm		Figure 3
b) Shape	Back feet as specified by the manufacturer and as shown in one of the examples in Figure 3		Figure 3
Example 1 (see Figure 3)	$L_0 - L_1 > 0$		Figure 3
Example 2 (see Figure 3)	$L_0 - L_2 > 0$		Figure 3
Example 3 (see Figure 3)	$L_0 - L_3 > 0$		Figure 3
Surface quality[c]	A minimum of 95 % of the tiles are to be free from visible defects which can impair the appearance of a major area of tiles		ISO 10545-2
Physical property	**Precision**	**Natural**	**Test**
Water absorption Percent mass fraction	0,5 < E_v ≤ 3,0 % Individual maximum 3,3 %	0,5 < E_v ≤ 3,0 % Individual maximum 3,3 %	ISO 10545-3
Breaking strength, in Newtons			
a) Thickness ≥7,5 mm	Not less than 1 100	Not less than 1 100	ISO 10545-4
b) Thickness <7,5 mm	Not less than 600	Not less than 600	ISO 10545-4
Modulus of rupture, in Newtons per square millimetre Not applicable to tiles with breaking strength ≥3 000 N	Minimum 23 Individual minimum 18	Minimum 23 Individual minimum 18	ISO 10545-4
Abrasion resistance			
a) Resistance to deep abrasion of unglazed tiles: removed volume, in cubic millimetres	Maximum 275	Maximum 275	ISO 10545-6
b) Resistance to surface abrasion of glazed tiles intended for use on floors[d]	Report abrasion class and cycles passed	Report abrasion class and cycles passed	ISO 10545-7
Coefficient of linear thermal expansion[e]			
From ambient temperature to 100 °C	Test method available	Test method available	ISO 10545-8
Thermal shock resistance[e]	Test method available	Test method available	ISO 10545-9
Crazing resistance: glazed tiles[f]	Required	Required	ISO 10545-11
Frost resistance	Required	Required	ISO 10545-12
Moisture expansion, in millimetres per metre[e]	Test method available	Test method available	ISO 10545-10
Small colour differences[e]	Plain coloured tiles only where required GL: ΔE < 0,75 UGL: ΔE < 1,0	Plain coloured tiles only where required GL: ΔE < 0,75 UGL: ΔE < 1,0	ISO 10545-16
Impact resistance[e]	Test method available	Test method available	ISO 10545-5
Chemical property	**Precision**	**Natural**	**Test**
Resistance to staining			
a) Glazed tiles	Minimum class 3	Minimum class 3	ISO 10545-14
b) Unglazed tiles[e]	Test method available	Test method available	ISO 10545-14

© ISO 2018 – All rights reserved

AVA Documents Document Sharing Hub
Full document details: BS ISO 13006:2018

Table A.1 *(continued)*

Dimensions and surface quality	Precision	Natural	Test
Resistance to chemicals			
Resistance to low concentrations of acids and alkalis	Manufacturer is to state classification	Manufacturer is to state classification	ISO 10545-13
Resistance to high concentrations of acids and alkalis[e]	Test method available	Test method available	ISO 10545-13
Resistance to household chemicals and swimming pool salts	Minimum B	Minimum B	ISO 10545-13
Lead and cadmium release[e]	Test method available	Test method available	ISO 10545-15

[a] Similar joint widths shall be used to apply to traditional systems based on non-metric sizes.

[b] Not applicable to tiles having curved shapes.

[c] As a result of firing, slight variations from this standard colour are unavoidable. This does not apply to intentional irregularities of colour variation of the face of tiles (which can be unglazed, glazed or partly glazed) or to the colour variation over a tile area which is characteristic for this type of tile and desirable. Spots or coloured dots which are introduced for decorative purposes are not considered a defect.

[d] Use Annex N for the abrasion resistance classification for all glazed tiles intended for use on floors.

[e] Annex P gives information regarding requirements which are non-compulsory but which are listed as "test method available".

[f] Certain decorative effects can have a tendency to craze. These are to be identified by the manufacturer, in which case, the crazing test given in ISO 10545-11 is not applicable.

[g] Where applicable, tile thickness shall include the addition of back feet heights, as measured in accordance with Figure 3.

© ISO 2018 – All rights reserved
Documents
Document Sharing Hub
Full document details: BS ISO 13006:2018