BS ISO 13041-1:2020

BSI Standards Publication

# Test conditions for numerically controlled turning machines and turning centres

Part 1: Geometric tests for machines with horizontal workholding spindle(s)

Documents
Document Sharing Hub

Full document details: BS ISO 13041-1:2020

# National foreword

This British Standard is the UK implementation of ISO 13041-1:2020. It supersedes BS ISO 13041-1:2004, which is withdrawn.

The UK participation in its preparation was entrusted to Technical Committee MTE/1/2, Machine tools - Accuracy.

A list of organizations represented on this committee can be obtained on request to its secretary.

This publication does not purport to include all the necessary provisions of a contract. Users are responsible for its correct application.

© The British Standards Institution 2020
Published by BSI Standards Limited 2020

ISBN 978 0 580 90525 4

ICS 25.040.20

**Compliance with a British Standard cannot confer immunity from legal obligations.**

This British Standard was published under the authority of the Standards Policy and Strategy Committee on 30 April 2020.

**Amendments/corrigenda issued since publication**

| Date | Text affected |
|---|---|

Documents
Document Sharing Hub

Full document details: BS ISO 13041-1:2020

INTERNATIONAL STANDARD

# ISO 13041-1

Second edition
2020-03

# Test conditions for numerically controlled turning machines and turning centres —

## Part 1: Geometric tests for machines with horizontal workholding spindle(s)

*Conditions d'essai des tours à commande numérique et des centres de tournage —*

*Partie 1: Essais géométriques pour les machines à broche horizontale*

Reference number
ISO 13041-1:2020(E)

Documents
Document Sharing Hub

© ISO 2020

Full document details: BS ISO 13041-1:2020

**COPYRIGHT PROTECTED DOCUMENT**

© ISO 2020

All rights reserved. Unless otherwise specified, or required in the context of its implementation, no part of this publication may be reproduced or utilized otherwise in any form or by any means, electronic or mechanical, including photocopying, or posting on the internet or an intranet, without prior written permission. Permission can be requested from either ISO at the address below or ISO's member body in the country of the requester.

ISO copyright office
CP 401 • Ch. de Blandonnet 8
CH-1214 Vernier, Geneva
Phone: +41 22 749 01 11
Fax: +41 22 749 09 47
Email: copyright@iso.org
Website: www.iso.org

Published in Switzerland



© ISO 2020 – All rights reserved

Documents
Document Sharing Hub

Full document details: BS ISO 13041-1:2020

# Contents

Page

**Foreword** ... **iv**

**Introduction** ... **v**

**1 Scope** ... **1**

**2 Normative references** ... **1**

**3 Terms and definitions** ... **1**

**4 Preliminary remarks** ... **2**
- 4.1 Measuring units ... 2
- 4.2 Reference to ISO 230 ... 2
- 4.3 Machine levelling ... 2
- 4.4 Testing sequence ... 2
- 4.5 Tests to be performed ... 2
- 4.6 Measuring instruments ... 3
- 4.7 Diagrams ... 3
- 4.8 Linear motions ... 3
- 4.9 Tool turret and tool spindle(s) ... 3
- 4.10 Machine classifications ... 3
- 4.11 Software compensation ... 9
- 4.12 Tolerances ... 10
- 4.13 Axes not under test ... 10

**5 Geometric tests** ... **11**
- 5.1 Workholding spindle ... 11
- 5.2 Straightness of axes of motion ... 13
- 5.3 Relation between linear motions and/or workholding spindle(s) ... 16
- 5.4 Angular error of linear axes of motion ... 23
- 5.5 Tailstock ... 26
- 5.6 Tool turret and tool spindle ... 30
- 5.7 Rotary workholding spindle head or tool turret head ... 39

**Annex A** (informative) **Error motions of the axis of rotation of workholding and tool spindles** ... **41**

**Annex B** (informative) **Terms in non-ISO languages** ... **46**

**Bibliography** ... **47**

© ISO 2020 – All rights reserved



Documents
Document Sharing Hub

Full document details: BS ISO 13041-1:2020

# Foreword

ISO (the International Organization for Standardization) is a worldwide federation of national standards bodies (ISO member bodies). The work of preparing International Standards is normally carried out through ISO technical committees. Each member body interested in a subject for which a technical committee has been established has the right to be represented on that committee. International organizations, governmental and non-governmental, in liaison with ISO, also take part in the work. ISO collaborates closely with the International Electrotechnical Commission (IEC) on all matters of electrotechnical standardization.

The procedures used to develop this document and those intended for its further maintenance are described in the ISO/IEC Directives, Part 1. In particular, the different approval criteria needed for the different types of ISO documents should be noted. This document was drafted in accordance with the editorial rules of the ISO/IEC Directives, Part 2 (see www.iso.org/directives).

Attention is drawn to the possibility that some of the elements of this document may be the subject of patent rights. ISO shall not be held responsible for identifying any or all such patent rights. Details of any patent rights identified during the development of the document will be in the Introduction and/or on the ISO list of patent declarations received (see www.iso.org/patents).

Any trade name used in this document is information given for the convenience of users and does not constitute an endorsement.

For an explanation of the voluntary nature of standards, the meaning of ISO specific terms and expressions related to conformity assessment, as well as information about ISO's adherence to the World Trade Organization (WTO) principles in the Technical Barriers to Trade (TBT) see www.iso.org/iso/foreword.html.

This document was prepared by Technical Committee ISO/TC 39, *Machine tools*, Subcommittee SC 2, *Test conditions for metal cutting machine tools*.

Any feedback or questions on this document should be directed to the user's national standards body. A complete listing of these bodies can be found at www.iso.org/members.html.

This second edition cancels and replaces the first edition (ISO 13041-1:2004), which has been technically revised.

The main changes compared to the previous edition are as follows:

— in 5.2, straightness measurements in all axes of motions have been added (tests G3, G4 and G5);

— in 5.3, squareness errors between axes of motion have been added (tests G7, G8 and G9);

— a test for error motion of axis of rotation of workholding and tool spindles has been added in Annex A;

— terms in non-ISO languages have been added in Annex B.

In addition to text written in the official ISO languages (English, French or Russian), this document gives text in German, Italian, Japanese and Persian. This text is published under the responsibility of the member body/National Committee for Germany (DIN), Italy (UNI), Japan (JISC) and Iran (ISRI) and is given for information only. Only the text given in the official languages can be considered as ISO text.

A list of all parts in the ISO 13041 series can be found on the ISO website.


© ISO 2020 – All rights reserved
Documents
Document Sharing Hub
Full document details: BS ISO 13041-1:2020

# Introduction

The objective of the ISO 13041 series is to provide information as wide and comprehensive as possible on geometric, positional, contouring, thermal and machining tests which can be carried out for comparison, acceptance, maintenance or any other purpose.

The ISO 13041 series specifies, with reference to the ISO 230-1 and ISO 230-7, tests for turning centres and numerically controlled turning machines with/without tailstocks standing alone or integrated in flexible manufacturing systems. The ISO 13041 series also establishes the tolerances or maximum acceptable values for the test results corresponding to general-purpose and normal-accuracy turning centres and numerically controlled turning machines.

© ISO 2020 – All rights reserved


Documents
Document Sharing Hub
Full document details: BS ISO 13041-1:2020

Documents
Document Sharing Hub

# Test conditions for numerically controlled turning machines and turning centres —

# Part 1: Geometric tests for machines with horizontal workholding spindle(s)

## 1 Scope

This document specifies, with reference to ISO 230-1, the geometric tests on normal accuracy numerically controlled (NC) turning machines and turning centres with horizontal work spindles as defined in 3.1 and 3.2. It also specifies the applicable tolerances corresponding to the above-mentioned tests.

Where applicable, this document also applies to horizontal spindle turret and single spindle automatic lathes.

This document explains different concepts or configurations and common features of NC turning machines and turning centres. It also provides a terminology and designation of controlled axes.

This document deals only with the verification of the accuracy of the machine. It does not apply to the operational testing of the machine (e.g. vibration, abnormal noise, stick slip motion of components) nor to machine characteristics (e.g. speeds, feeds) as such are checks generally carried out before testing the accuracy.

## 2 Normative references

The following documents are referred to in the text in such a way that some or all of their content constitutes requirements of this document. For dated references, only the edition cited applies. For updated references, the latest edition of the referenced document (including any amendments) applies.

ISO 230-1:2012, *Test code for machine tools — Part 1: Geometric accuracy of machines operating under no-load or quasi-static conditions*

ISO 230-7:2015, *Test code for machine tools — Part 7: Geometric accuracy of axes of rotation*

## 3 Terms and definitions

For the purposes of this document, the following terms and definitions apply.

ISO and IEC maintain terminological databases for use in standardization at the following addresses:

— ISO Online browsing platform: available at https://www.iso.org/obp

— IEC Electropedia: available at http://www.electropedia.org/

**3.1**
**numerically controlled turning machine**
**NC turning machine**
turning machine that operates under numerical control or computerized numerical control

© ISO 2020 – All rights reserved

Documents
Document Sharing Hub
Full document details: BS ISO 13041-1:2020

**3.2**
**turning centre**
*NC turning machine* (3.1) equipped with power-driven tool(s) and the capacity to orientate the workholding spindle around its axis

Note 1 to entry: This machine may include additional features such as automatic tool changing from a magazine

**3.3**
**tool turret**
multiple tool-holding system capable of positioning the cutting tool to execute machining operation

# 4 Preliminary remarks

## 4.1 Measuring units

In this document, all linear dimensions, deviations and corresponding tolerances are expressed in millimetres; angular dimensions are expressed in degrees, and angular deviations and the corresponding tolerances are expressed in ratios but in some cases microradians or arcseconds may be used for clarification purposes. Formula (1) should be used for the conversion of the units of angular deviations or tolerances.

$$0{,}010 / 1\,000 = 10\ \mu\text{rad} \approx 2'' \quad (1)$$

## 4.2 Reference to ISO 230

To apply this document, reference shall be made to ISO 230-1:2012, ISO 230-7:2015, when required, especially for the installation of the machine before testing, warming up of the spindle and other moving components, description of measuring methods and recommended accuracy of testing equipment.

Where the test concerned is in compliance with the specifications of ISO 230-1 and/or ISO 230-7, a reference to the corresponding clause of ISO 230-1, respectively ISO 230-7, is shown before the instructions in the "Observations" block of the tests described below. Tolerances are given for each test (see G1 to G30).

## 4.3 Machine levelling

Prior to conducting tests on a machine tool, the machine tool should be levelled according to the recommendations of the supplier/manufacturer (see ISO 230-1:2012, 6.1.1 and 6.1.2).

## 4.4 Testing sequence

The sequence in which the tests are presented in this document in no way defines the practical order of testing. In order to make the mounting of instruments or gauging easier, tests may be performed in any order.

## 4.5 Tests to be performed

When testing a machine, it is not always necessary or possible to carry out all the tests described in this document. When the tests are required for acceptance purposes, it is up to the user to choose, in agreement with the supplier/manufacturer, the relevant tests relating to the components and/or the properties of the machine. These tests are to be clearly stated when ordering a machine. A simple reference to this document for the acceptance tests, without specifying the tests to be carried out, and without agreement on the relevant expenses, cannot be considered as binding for any contracting party.


© ISO 2020 – All rights reserved
Documents
Document Sharing Hub
Full document details: BS ISO 13041-1:2020

## 4.6 Measuring instruments

Measuring instruments indicated in the tests described below are only examples. Other instruments capable of measuring the same quantities and having the same, or a smaller, measurement uncertainty may be used.

When a dial gauge is referred to, it can mean not only dial test indicators (DTI) but any type of linear displacement sensor such as analogue or digital dial gauges, linear variable differential transformer (LVDTs), linear scale displacement gauges, or non-contact sensors, when applicable to the test concerned.

Similarly, when a straightedge is referred to, it can mean any type of straightness reference metrological standard, such as a laser beam, special optics, a granite or ceramic or steel or cast iron straightedge, one arm of a square, one generating line on a cylindrical square, any straight path on a reference cube, or a special, dedicated artefact manufactured to fit in the T-slots or other references.

In the same way, when a square is mentioned, it can be any type of squareness reference artefact, such as a granite or ceramic or steel or cast-iron square, a cylindrical square, a reference cube, or a special dedicated artefact.

Valuable information for measuring instruments are available in ISO/TR 230-11.

## 4.7 Diagrams

In this document, for reasons of simplicity, the diagrams associated with geometric tests illustrate only one type of machine.

## 4.8 Linear motions

For simplicity, all the machine examples shown in the Figures and Tables use the axis designation of a letter and a number (e.g. X1, X2) as defined in ISO 841:2001, 6.1. In all examples, the use of the letters U, V, or W can be substituted.

## 4.9 Tool turret and tool spindle(s)

As defined in 3.2, turning centres have not only stationary tools but also power-driven rotary tools, which means that the turret should also have power drive mechanisms. When the number of tools expected to be used exceeds the capacity of the turret, an automatic change of tools in the turret, or a change of turret, may be provided.

Figure 3 shows typical types of tool turrets and tool spindles.

## 4.10 Machine classifications

The machine tools considered in this document are divided into two basic configurations (see Table 1, Figure 1 and Figure 2):

— Type A: Machine tools with tailstock;

— Type B: Machine tools without tailstock.

Type A-Machine tools can be generally classified into two further groups:

— Group A-1: With one turret;

— Group A-2: With two turrets.

NOTE There are machines with multiple turrets. Test described in this document apply to all turrets.

© ISO 2020 – All rights reserved

Documents
Document Sharing Hub
Full document details: BS ISO 13041-1:2020

Type B-Machine tools can be generally classified into four further groups:

— Group B-1: With one workhead (headstock);

— Group B-2: With two co-axial interfacing heads;

— Group B-3: With a co-axial rotating head;

— Group B-4: With two parallel heads.

**Table 1 — Examples of turning centre configurations**

| Type A – With tailstock | |
|---|---|
| **Group A-1: With one tool turret** | **Group A-2: With two tool turrets** |
| Tool turret type:<br>With tool turret type a):<br> 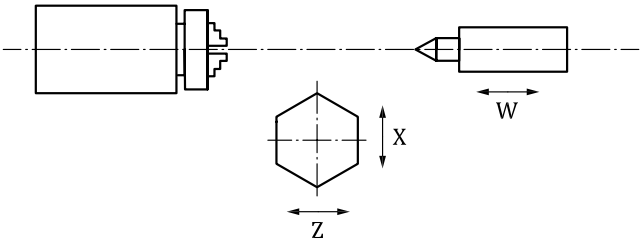 <br> | Tool turret type:<br>NOTE The two tool turrets can be different.<br>With two tool turrets type b):<br> 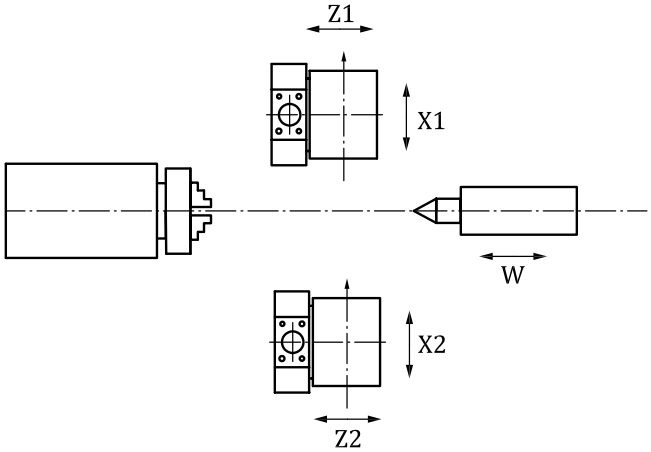 <br> |
| With tool turret type b):<br> 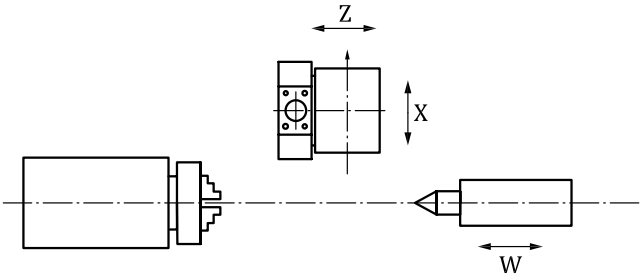 <br> | With tool turret type b) and tools turret type f):<br> 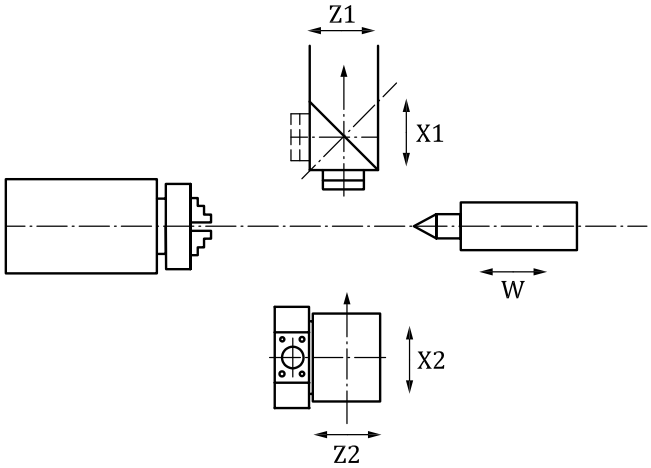 <br> |



© ISO 2020 – All rights reserved

Documents
Document Sharing Hub

Full document details: BS ISO 13041-1:2020

**Table 1** *(continued)*

| **Type B – Without tailstock** | |
|---|---|
| **Group B-1: With one workholdling spindle head** | |
| With tool turret type a): 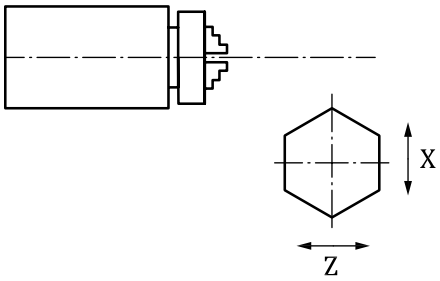  | With tool turret type d): 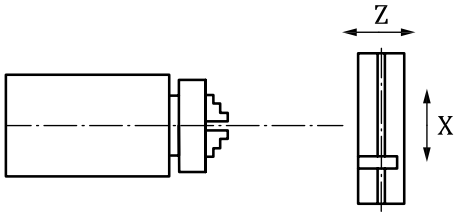  |
| With tool turret type b): 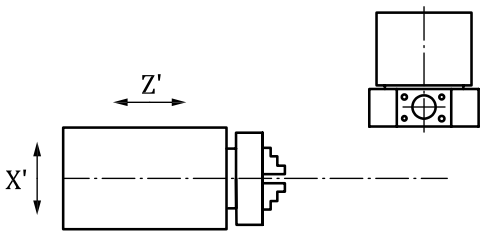  | With *B'*-axis rotary head: 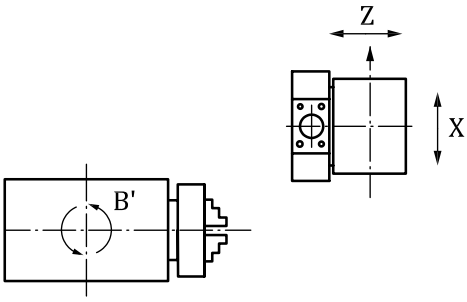  |
| **Group B-2: With two co-axial workholding spindle heads** | |
| Any tool turret type: 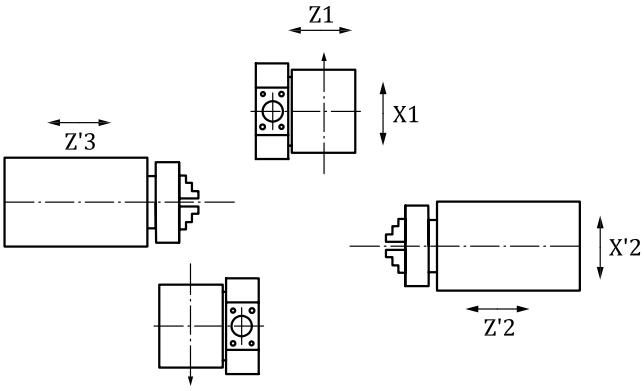  | Both heads can be aligned: 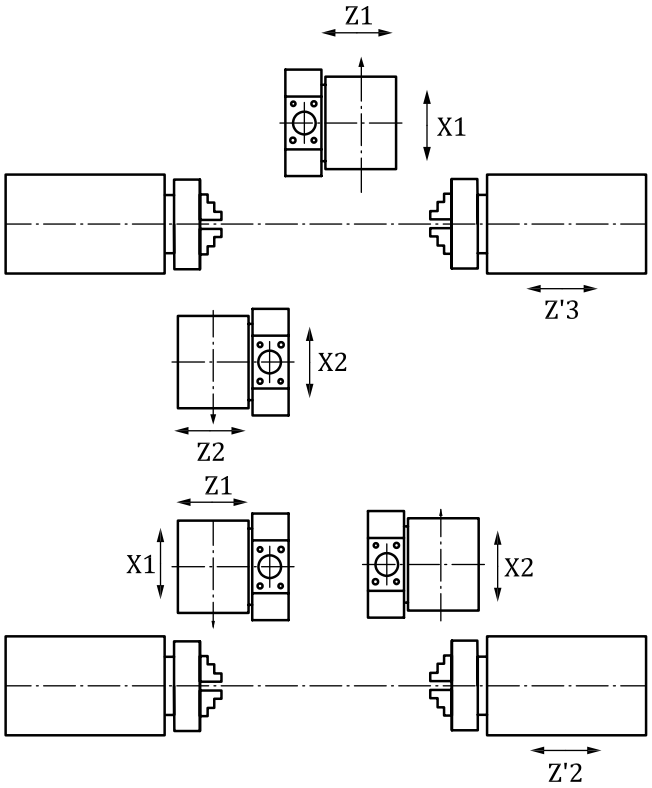  |

© ISO 2020 – All rights reserved



Documents
Document Sharing Hub
Full document details: BS ISO 13041-1:2020

**Table 1** *(continued)*

| **Group B-3: With two co-axial rotating workholding spindle heads** | **Group B-4: With two parallel workholding spindle heads** |
|---|---|
| Workhead at machining position:<br> 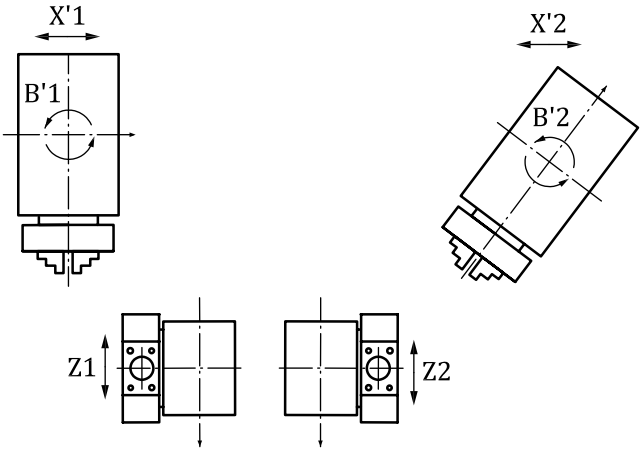 <br> | 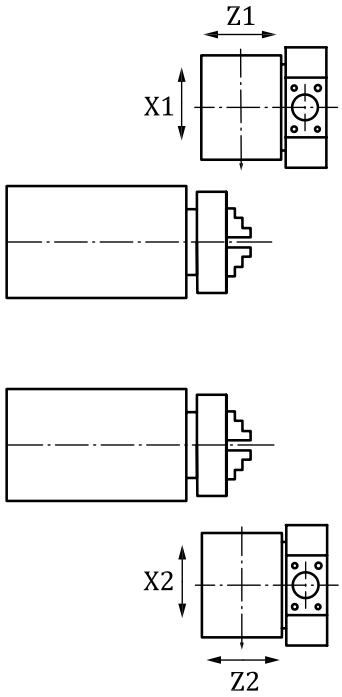 <br><br>Axes of motion may be by the work heads.<br>*Y*-axis motion can be optional. |
| **Symbols used:**<br>Workhead<br> 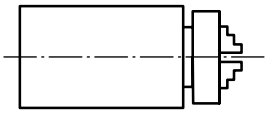 <br>Tailstock<br> 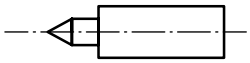 <br>Tool turret types a) to g), see also Figure 3.<br> 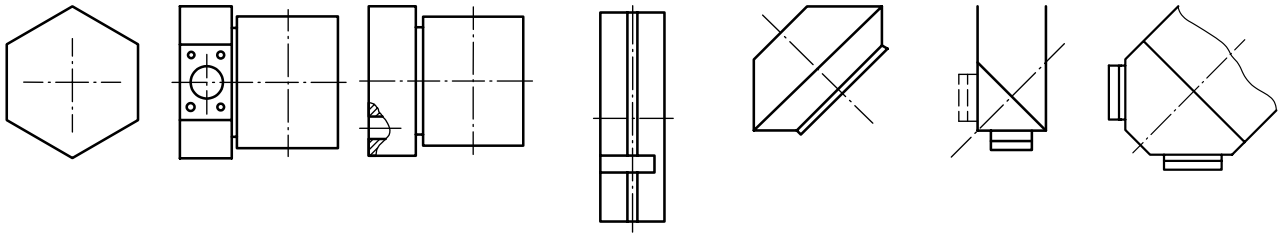 <br>a) b) c) d) e) f) g) | |


© ISO 2020 – All rights reserved
Documents
Document Sharing Hub
Full document details: BS ISO 13041-1:2020

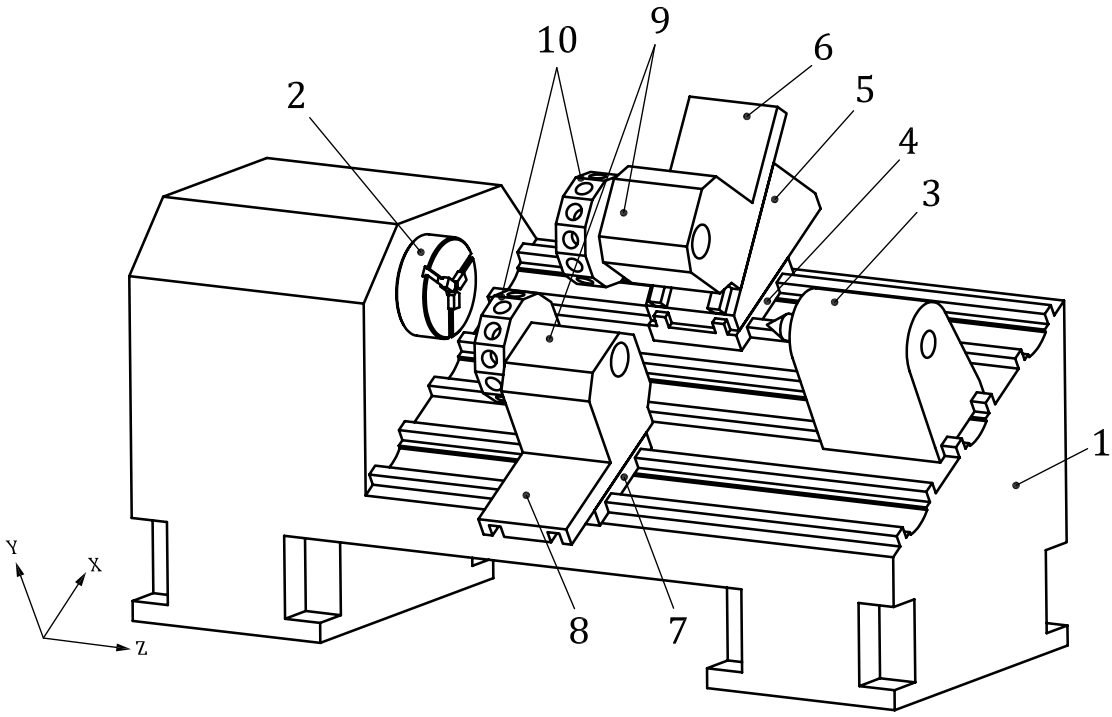


**Key**

| | English | French |
|---|---|---|
| 1 | bed | banc |
| 2 | main workholding spindle, C′-axis | broche porte-pièce, axe C′ |
| 3 | tail stock, W-axis | contre-poupée, axe W |
| 4 | carriage 1, Z-axis | chariot 1, axe Z |
| 5 | tool turret slide 1, X-axis | chariot de tourelle 1, axe X |
| 6 | slide, P-axis | chariot, axe P |
| 7 | carriage 2, Z2-axis | chariot 2, axe Z2 |
| 8 | tool turret slide 2, X2-axis | chariot de tourelle 2, axe X2 |
| 9 | tool turret head 1 and 2 | poupée porte-tourelle 1 et 2 |
| 10 | indexing turret 1 and 2 | tourelle à indexage 1 et 2 |

NOTE 1 P-axis in item 6 and X-axis in item 5 together generate the Y-axis movement.

NOTE 2 For languages other than official ISO languages, see Table B.1.

**Figure 1 — Example of a horizontal spindle turning centre with two tool turrets and tail stock**

© ISO 2020 – All rights reserved

Documents
Document Sharing Hub
Full document details: BS ISO 13041-1:2020

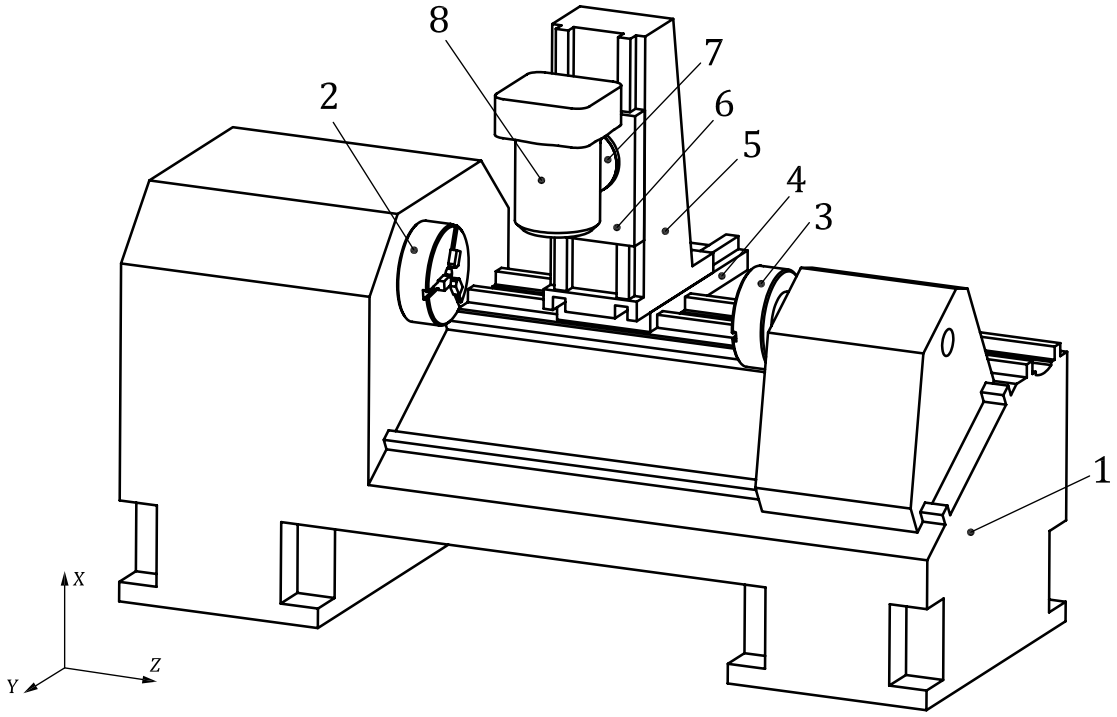


**Key**

| | English | French |
|---|---|---|
| 1 | bed | banc |
| 2 | main workholding spindle, C'-axis | broche porte-pièce principal, axe C´ |
| 3 | sub workholding spindle, C´2-axis | sous-broche porte-pièce, axe C´2 |
| 4 | carriage, Z-axis | chariot, axe Z |
| 5 | column, Y-axis | colonne, axe Y |
| 6 | carriage, X-axis | chariot, axe X |
| 7 | rotational B-axis | chariot, axe Y |
| 8 | tool spindle head | tête de la broche porte-outil |

NOTE For languages other than official ISO languages, see Table B.2.

**Figure 2 — Example of a horizontal spindle turning centre with double workholding spindles, tool spindle and B-axis**


© ISO 2020 – All rights reserved
Documents
Document Sharing Hub
Full document details: BS ISO 13041-1:2020

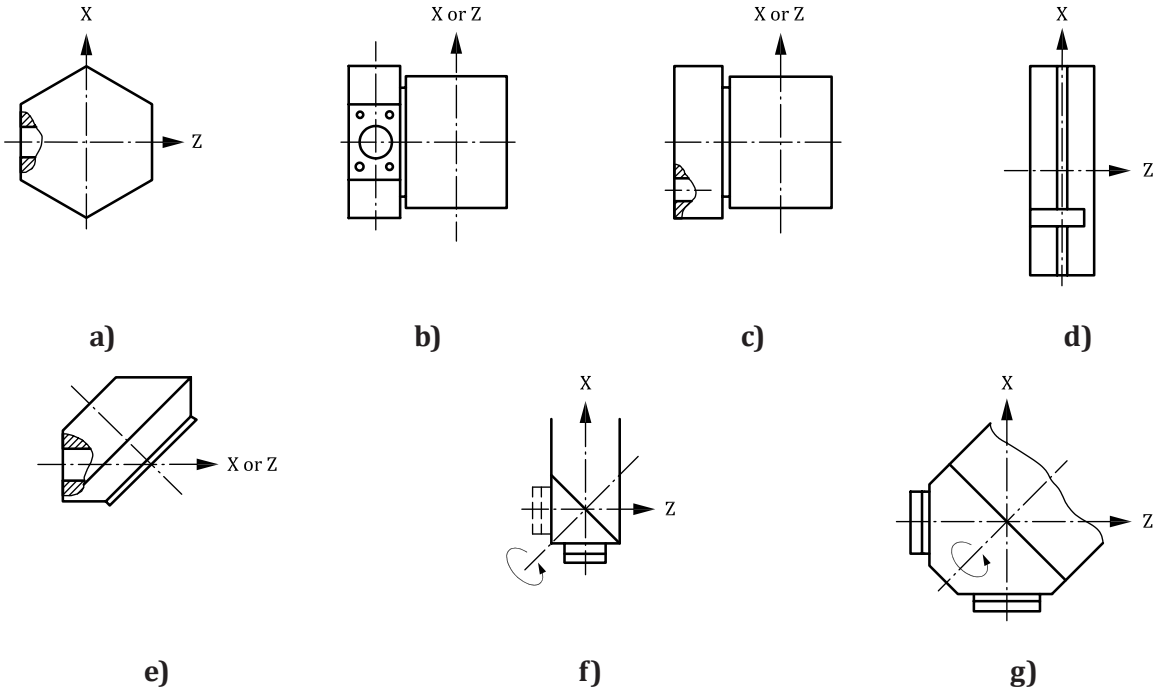


**Figure 3 — Examples of tool turret and tool spindle configurations**

Figure 3 shows the following types:

a) horizontal turret: Turret rotation axis is in the Y-direction. This turret type can have either stationary or power-driven tools or a combination of both;

b) wheel type turret for radial tools: Turret rotation axis is in the X- or Z-direction. This turret type can have stationary tools only, power-driven tools only or both stationary and power-driven tools;

c) wheel type turret for axial tools: The tools are set axially to the axis of rotation of the turret. Combinations of b) and c) are possible;

d) linear turret;

e) oblique turret: The tools can be used in the X- or Z-direction only;

f) single tool spindle with single tool head: By swivelling the head the tool spindle can be in both X- and Z-axis direction. A tool changer and a tool magazine are needed;

g) oblique dual spindle tool head: One spindle is provided for stationary tools and the second for power-driven tools.

## 4.11 Software compensation

When built-in software facilities are available for compensating geometric, positioning, contouring and thermal deviations, their use during these tests should be based on an agreement between the user and the supplier/manufacturer. When the software compensation is used, axes shall not be locked for test purposes.

© ISO 2020 – All rights reserved

Documents
Document Sharing Hub
Full document details: BS ISO 13041-1:2020