BS ISO 13041-2:2020

BSI Standards Publication

Test conditions for numerically controlled turning machines and turning centres

Part 2: Geometric tests for machines with a vertical workholding spindle

Documents
Document Sharing Hub

Full document details: BS ISO 13041-2:2020

National foreword

This British Standard is the UK implementation of ISO 13041-2:2020. It supersedes BS ISO 13041-2:2008, which is withdrawn.

The UK participation in its preparation was entrusted to Technical Committee MTE/1/2, Machine tools - Accuracy.

A list of organizations represented on this committee can be obtained on request to its secretary.

This publication does not purport to include all the necessary provisions of a contract. Users are responsible for its correct application.

© The British Standards Institution 2020
Published by BSI Standards Limited 2020

ISBN 978 0 580 98122 7

ICS 25.040.20

Compliance with a British Standard cannot confer immunity from legal obligations.

This British Standard was published under the authority of the Standards Policy and Strategy Committee on 31 March 2020.

Amendments/corrigenda issued since publication

Date	Text affected

Documents
Document Sharing Hub

Full document details: BS ISO 13041-2:2020

INTERNATIONAL STANDARD

ISO 13041-2

Second edition
2020-03

Test conditions for numerically controlled turning machines and turning centres —

Part 2: Geometric tests for machines with a vertical workholding spindle

Conditions d'essai des tours à commande numérique et des centres de tournage —

Partie 2: Essais géométriques pour les machines à broche porte-pièce verticale

Reference number
ISO 13041-2:2020(E)

Documents
Document Sharing Hub

© ISO 2020

Full document details: BS ISO 13041-2:2020

COPYRIGHT PROTECTED DOCUMENT

© ISO 2020

All rights reserved. Unless otherwise specified, or required in the context of its implementation, no part of this publication may be reproduced or utilized otherwise in any form or by any means, electronic or mechanical, including photocopying, or posting on the internet or an intranet, without prior written permission. Permission can be requested from either ISO at the address below or ISO's member body in the country of the requester.

ISO copyright office
CP 401 • Ch. de Blandonnet 8
CH-1214 Vernier, Geneva
Phone: +41 22 749 01 11
Fax: +41 22 749 09 47
Email: copyright@iso.org
Website: www.iso.org

Published in Switzerland

© ISO 2020 – All rights reserved

Documents
Document Sharing Hub

Full document details: BS ISO 13041-2:2020

Contents

Page

Foreword ... **iv**

Introduction ... **v**

1 Scope ... **1**

2 Normative references ... **1**

3 Terms and definitions ... **1**

4 Preliminary remarks ... **2**
- 4.1 Measurement units ... 2
- 4.2 Reference to ISO 230-1 and ISO 230-7 ... 2
- 4.3 Machine levelling ... 2
- 4.4 Testing sequence ... 2
- 4.5 Test to be performed ... 3
- 4.6 Measuring instruments ... 3
- 4.7 Diagrams ... 3
- 4.8 Software compensation ... 3
- 4.9 Gravity influence for two rail head machines ... 3
- 4.10 Tolerances ... 3
- 4.11 Linear motions ... 4
- 4.12 Tool turrets or toolholding components (element) ... 4
- 4.13 Machine configurations and designation of axes ... 4
- 4.14 Machine classifications ... 4

5 Geometric tests ... **9**
- 5.1 Workholding spindle or table ... 9
- 5.2 Linear axes X and Z ... 11
- 5.3 Cross-rail movement ... 17
- 5.4 Test related to Y-axis ... 20
- 5.5 Tool holders and tool turrets ... 24
- 5.6 Power driven toolholding spindles ... 26

Annex A (informative) **Tests for checking the accuracy of axes of rotation** ... **30**

Annex B (informative) **Terms in other languages** ... **35**

Bibliography ... **36**

© ISO 2020 – All rights reserved

Documents
Document Sharing Hub

Full document details: BS ISO 13041-2:2020

Foreword

ISO (the International Organization for Standardization) is a worldwide federation of national standards bodies (ISO member bodies). The work of preparing International Standards is normally carried out through ISO technical committees. Each member body interested in a subject for which a technical committee has been established has the right to be represented on that committee. International organizations, governmental and non-governmental, in liaison with ISO, also take part in the work. ISO collaborates closely with the International Electrotechnical Commission (IEC) on all matters of electrotechnical standardization.

The procedures used to develop this document and those intended for its further maintenance are described in the ISO/IEC Directives, Part 1. In particular, the different approval criteria needed for the different types of ISO documents should be noted. This document was drafted in accordance with the editorial rules of the ISO/IEC Directives, Part 2 (see www.iso.org/directives).

Attention is drawn to the possibility that some of the elements of this document may be the subject of patent rights. ISO shall not be held responsible for identifying any or all such patent rights. Details of any patent rights identified during the development of the document will be in the Introduction and/or on the ISO list of patent declarations received (see www.iso.org/patents).

Any trade name used in this document is information given for the convenience of users and does not constitute an endorsement.

For an explanation of the voluntary nature of standards, the meaning of ISO specific terms and expressions related to conformity assessment, as well as information about ISO's adherence to the World Trade Organization (WTO) principles in the Technical Barriers to Trade (TBT) see www.iso.org/iso/foreword.html.

This document was prepared by Technical Committee ISO/TC 39, *Machine tools*, Subcommittee SC 2, *Test conditions for metal cutting machine tools*.

Any feedback or questions on this document should be directed to the user's national standards body. A complete listing of these bodies can be found at www.iso.org/members.html.

This second edition cancels and replaces the first edition (ISO 13041-2:2008), which has been technically revised. The main changes compared to the previous edition are as follows:

— the categorization of machine size ranges has been abolished;

— the discrimination of tolerances, if any, due to different machine sizes (diameter of chuck or workholding spindle) is expressed in the specific tests G1 to G21;

— the tolerances given in the G-tests have been changed due to the absence of size categories;

— the numbering of tests G1 to G21 has been changed;

— tests for horizontal rams have been removed because these are no longer in existence;

— former G1 test "checking of flatness of the workholding spindle" has been removed;

— terms in Persian and Japanese have been added in Annex B.

In addition to text written in the official ISO languages (English, French or Russian), this document gives text in German, Italian, Japanese and Persian. This text is published under the responsibility of the member body/National Committee for Germany (DIN), Italy (UNI), Japan (JISC) and Iran (ISRI) and is given for information only. Only the text given in the official languages can be considered as ISO text.

A list of all parts in the ISO 13041 series can be found on the ISO website.

© ISO 2020 – All rights reserved
Documents
Document Sharing Hub
Full document details: BS ISO 13041-2:2020

Introduction

A turning centre is a machine tool in which the principal movement is the rotation of the workpiece against the stationary cutting tool(s). It is a numerically controlled machine tool capable of performing multiple machining operations, including milling, turning, boring, drilling and tapping, as well as automatic tool changing from a magazine or similar storage unit in accordance with a machining program.

The objective of the ISO 13041 series is to provide information as wide and comprehensive as possible on geometric, positional, contouring, thermal and machining tests which can be carried out for comparison, acceptance, maintenance or any other purpose.

The ISO 13041 series specifies, with reference to ISO 230-1 and ISO 230-7, tests for turning centres and numerically controlled turning machines with/without tailstocks standing alone or integrated in flexible manufacturing systems. The ISO 13041 series also establishes the tolerances or maximum acceptable values for the test results corresponding to general-purpose and normal-accuracy turning centres and numerically controlled turning machines.

© ISO 2020 – All rights reserved

Documents
Document Sharing Hub
Full document details: BS ISO 13041-2:2020

Documents
Document Sharing Hub

Test conditions for numerically controlled turning machines and turning centres —

Part 2: Geometric tests for machines with a vertical workholding spindle

1 Scope

This document specifies, with reference to ISO 230-1 and ISO 230-7, the geometric tests for general-purpose normal accuracy numerically controlled (NC) turning machines and turning centres with vertical workholding spindles, as well as the corresponding applicable tolerances.

This document explains different concepts or configurations and common features of NC turning machines and turning centres with vertical workholding spindles. It also provides a terminology and designation of controlled axes (see Figures 1, 2 and Table 1).

This document deals only with the verification of the accuracy of the machine. It does not apply to the operational testing of the machine (e.g. vibration, abnormal noise, stick slip motion of components) nor to machine characteristics (e.g. speeds, feeds). Tests not concerning the geometric accuracy of the machine are dealt with in other parts of ISO 13041.

2 Normative references

The following documents are referred to in the text in such a way that some or all of their content constitutes requirements of this document. For dated references, only the edition cited applies. For undated references, the latest edition of the referenced document (including any amendments) applies.

ISO 230-1:2012, *Test code for machine tools — Part 1: Geometric accuracy of machines operating under no-load or quasi-static conditions*

ISO 230-7:2015, *Test code for machine tools — Part 7: Geometric accuracy of axes of rotation*

3 Terms and definitions

For the purposes of this document, the following terms and definitions apply.

ISO and IEC maintain terminological databases for use in standardization at the following addresses:

— ISO Online browsing platform: available at https://www.iso.org/obp

— IEC Electropedia: available at http://www.electropedia.org/

3.1
turning machine
machine tool in which the principal movement is the rotation of the workpiece against the stationary cutting tool(s)

© ISO 2020 – All rights reserved

Documents
Document Sharing Hub
Full document details: BS ISO 13041-2:2020

3.2
numerical control
NC
automatic control of a process performed by a device that makes use of numerical data introduced while the operation is in progress

[SOURCE: ISO 2806:1994, 2.1.1]

3.3
numerically controlled turning machine
NC turning machine
turning machine (3.1) that operates under *numerical control* (3.2) or computerized numerical control

3.4
turning centre
NC turning machine (3.3) equipped with power driven tool(s) and the capacity to orientate the workholding spindle around its axis

Note 1 to entry: This machine may include additional features such as automatic tool changing from a magazine.

3.5
tool turret
multiple tool holding system capable of positioning the cutting tool to execute machining operation

4 Preliminary remarks

4.1 Measurement units

In this document, all linear dimensions, deviations, and corresponding tolerances are expressed in millimetres; angular dimensions are expressed in degrees, and angular deviations and the corresponding tolerance are expressed in ratios; but in some cases, micro-radians or arc seconds may be used for clarification purposes. The equivalence of Formula (1) should always be kept in mind.

$$0{,}010 \,/\, 1\,000 = 10 \times 10^{-6} = 10\ \mu\text{rad} \approx 2\ \text{arcsec} \tag{1}$$

4.2 Reference to ISO 230-1 and ISO 230-7

To apply this document, reference shall be made to ISO 230-1:2012 and ISO 230-7:2015, when required, especially for installation of the machine before testing, warming up of the spindle and moving components, description of measuring methods and recommended measuring instrument uncertainty.

Where the test concerned is in compliance with the specifications of ISO 230-1 or ISO 230-7, a reference to the corresponding clause of ISO 230-1 or ISO 230-7 is shown before the instructions in the "Observations" block of the tests described in Clause 5. Tolerances are given for each test (see G1 to G21, AR1 and AR2).

4.3 Machine levelling

Prior to conducting tests on a machine tool, the machine tool should be levelled according to the recommendations of the supplier/manufacturer (see ISO 230-1:2012, 6.1.1 and 6.1.2.).

4.4 Testing sequence

The sequence in which tests are presented in this document in no way defines the practical order of testing. In order to make the mounting of instruments or gauging easier, tests may be performed in any order.

© ISO 2020 – All rights reserved
Documents
Document Sharing Hub
Full document details: BS ISO 13041-2:2020

4.5 Test to be performed

When testing a machine, it is not always necessary or possible to carry out all the tests described in this document. When the tests are required for acceptance purposes, it is up to the user to choose, in agreement with the supplier/manufacturer, the relevant tests relating to the components and/or the properties of the machine. These tests are to be clearly stated when ordering a machine. A simple reference to this document for the acceptance tests, without specifying the tests to be carried out, and without agreement on the relevant expenses, cannot be considered as binding for any contracting party.

4.6 Measuring instruments

Measuring instruments indicated in the tests described below are only examples. Other instruments capable of measuring the same quantities and having the same, or a smaller, measurement uncertainty may be used. Reference shall be made to ISO 230-1:2012, Clause 5, that indicates the relationship between measurement uncertainties and the tolerances.

When a dial gauge is referred to, it can mean not only dial test indicators (DTI) but any type of linear displacement sensor such as analogue or digital dial gauges, linear variable differential transformer (LVDTs), linear scale displacement gauges, or non-contact sensors, when applicable to the test concerned.

Similarly, when a straightedge is referred to, it can mean any type of straightness reference artefact, such as a granite or ceramic or steel or cast iron straightedge, one arm of a square, one generating line on a cylindrical square, any straight path on a reference cube, or a special, dedicated artefact manufactured to fit in the T-slots or other references.

In the same way, when a square is mentioned, it can mean any type of squareness reference artefact, such as a granite, ceramic, steel or cast iron square, a cylindrical square, a reference cube, or, again, a special, dedicated artefact.

Valuable information for measuring instruments are available in ISO/TR 230-11.

4.7 Diagrams

In this document, for reasons of simplicity, the diagrams associated with geometric tests generally illustrate only one type of turning machine.

4.8 Software compensation

When built-in software facilities are available for compensating certain geometric deviations, their use during these tests for acceptance purposes shall be based on an agreement between the user and the manufacturer/supplier, with due consideration of the machine tool intended use. When software compensation is used, this shall be stated in the test report. It shall be noted that when software compensation is used, axes shall not be locked for test purposes (see ISO/TR 16907).

4.9 Gravity influence for two rail head machines

For machine tools provided with two slides on the cross rail [see Figure 2 and Table 1, Type B, a) and b)], the rail head not under test shall be in a defined park position according to the manufacturer's recommendations. If both rail heads are used, the deviations can change due to gravity.

4.10 Tolerances

In this document, all tolerance values are recommendations. When they are used for acceptance purposes, other values can be agreed upon between the user and the manufacturer/supplier. The required/agreed tolerance values shall be clearly stated when ordering the machine.

When the tolerance for a geometric test is established for a measuring length different from that given in this document, it shall be taken into consideration that the minimum value of tolerance is 0,005

© ISO 2020 – All rights reserved

AVA Documents Document Sharing Hub
Full document details: BS ISO 13041-2:2020

In principles, angular tolerances are given as a distance over 1 000 mm. The angle converted for a typical measuring length is presented in parentheses. For example: 0,060/1 000 (0,015/250).

4.11 Linear motions

For simplicity, all the machine examples shown in Figures 1 and 2 use the axis designation of a letter and a number (e.g. X, X1, X2,...) as defined in ISO 841:2001, 6.1. In all examples, the use of the letters U, V, or W can be substituted.

4.12 Tool turrets or toolholding components (element)

Depending on the machine configuration, cutting tools (stationary or power driven) can be clamped in a tool holder or in a tool turret located on the tool holder slide (rail head ram) and/or the side head ram. An automatic tool change device can also be used. However, this document does not provide any test methods for automatic tool change operations.

4.13 Machine configurations and designation of axes

A designation of the kinematic chain for the particular machine tool is supplied along with its respective diagrams (see Figures 1, 2 and Table 1). The designation illustrates the architecture of the machine tool by giving a list of structural and moving components starting from the workpiece (w) towards the tool (t). It describes the kinematic chain of moving axes in square brackets, where "w", "t", and "b" represent the workholding table or spindle, the tool, and the bed. The letter in front of the designation represents the type of machine tool. "V" stands for vertical workholding spindle/table.

4.14 Machine classifications

The machines considered in this document are divided into the following basic configurations (see Figures 1, 2 and Table 1).

— Type A: single-column machines;

— Type B: double-column machines.

Type B machine configurations are further classified into the following types:

— fixed columns — portal type;

— moving columns — gantry type.

© ISO 2020 – All rights reserved
Documents
Document Sharing Hub
Full document details: BS ISO 13041-2:2020

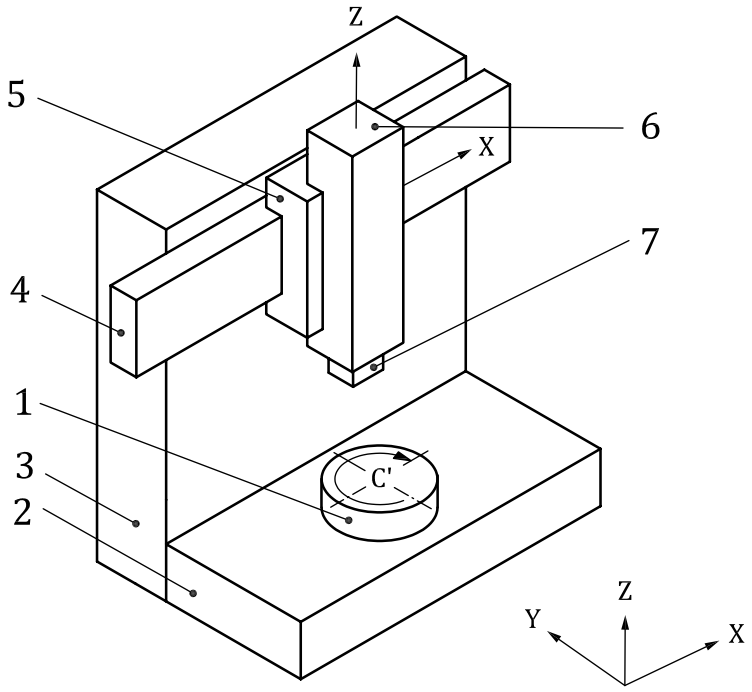

Key

	English	French
1	workholding spindle (workholding table), C’	broche porte-pièce (plateau tournant), C’
2	base	base
3	column	montant
4	cross-rail	traverse porte-chariot
5	rail head (saddle), X	chariot de traverse (traînard), X
6	tool holder slide (rail head ram), Z	chariot de tourelle, Z
7	tool holder	porte-outil

NOTE For languages other than official ISO languages, see Table B.1.

Figure 1 — Example of a single-column machines (Type A) V [w C' b X Z t]

© ISO 2020 – All rights reserved

Documents
Document Sharing Hub
Full document details: BS ISO 13041-2:2020

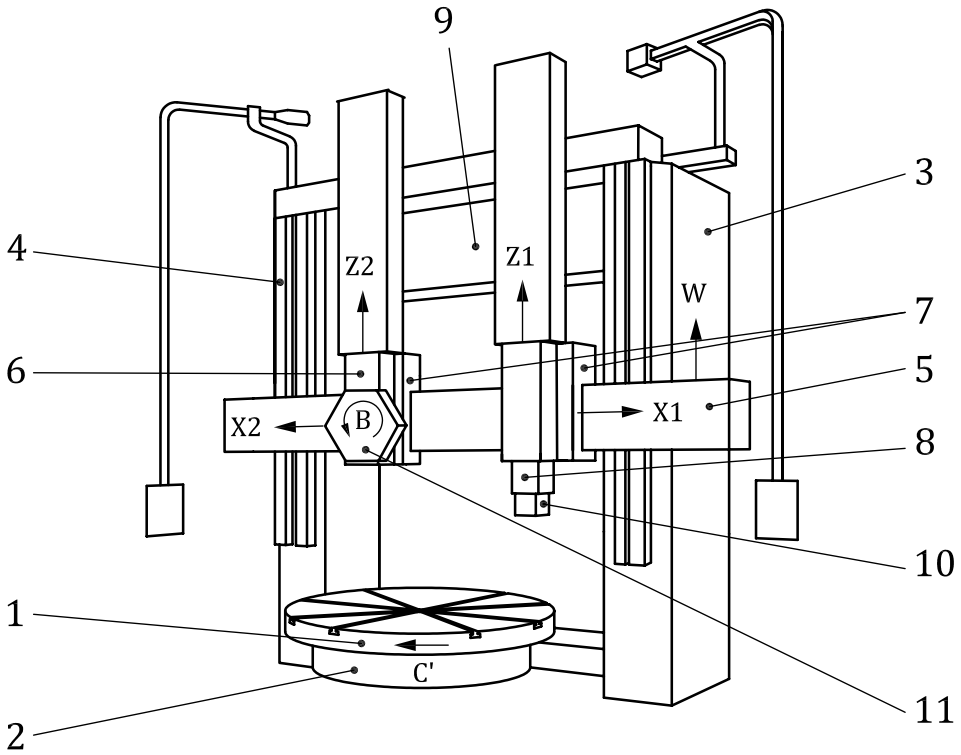

Key

	English	French
1	workholding spindle (workholding table), C’	broche porte-pièce (plateau tournant), C’
2	base	base
3	right-hand column	montant droit
4	left-hand column	montant gauche
5	cross-rail, W	traverse porte-chariot, W
6	tool holder slide (rail head ram), Z2	coulant du chariot de traverse, Z2
7	rail head (saddle), X1, X2	chariot de traverse (traînard), X1, X2
8	tool holder slide (rail head ram), Z1	coulant du chariot de traverse, Z1
9	bridge	traverse
10	tool holder	porte-outil
11	tool turret, B	tourelle, B

NOTE For languages other than official ISO languages, see Table B.2.

Figure 2 — Example of a double-column machines (Type B) V [w C' b W X1 Z1 t1] [w C' b W X2 Z2 B t*n*]

© ISO 2020 – All rights reserved
Documents
Document Sharing Hub
Full document details: BS ISO 13041-2:2020