BS ISO 13041-5:2015

BSI Standards Publication

Test conditions for numerically controlled turning machines and turning centres

Part 5: Accuracy of speeds and interpolations

bsi.

...making excellence a habit.™

Document Sharing Hub

Full document details: BS ISO 13041-5:2015

National foreword

This British Standard is the UK implementation of ISO 13041-5:2015. It supersedes BS ISO 13041-5:2006 which is withdrawn.

The UK participation in its preparation was entrusted to Technical Committee MTE/1/2, Machine tools - Accuracy.

A list of organizations represented on this committee can be obtained on request to its secretary.

This publication does not purport to include all the necessary provisions of a contract. Users are responsible for its correct application.

© The British Standards Institution 2015.
Published by BSI Standards Limited 2015

ISBN 978 0 580 78925 0

ICS 25.040.20

Compliance with a British Standard cannot confer immunity from legal obligations.

This British Standard was published under the authority of the Standards Policy and Strategy Committee on 31 March 2015.

Amendments/corrigenda issued since publication

Date	Text affected

Documents
Document Sharing Hub

Full document details: BS ISO 13041-5:2015

INTERNATIONAL STANDARD

ISO 13041-5

Second edition
2015-03-15

Test conditions for numerically controlled turning machines and turning centres —

Part 5: Accuracy of speeds and interpolations

Conditions d'essai des tours à commande numérique et des centres de tournage —

Partie 5: Exactitude des vitesses et interpolations

Reference number
ISO 13041-5:2015(E)

Documents
Document Sharing Hub

© ISO 2015

Full document details: BS ISO 13041-5:2015

COPYRIGHT PROTECTED DOCUMENT

© ISO 2015

All rights reserved. Unless otherwise specified, no part of this publication may be reproduced or utilized otherwise in any form or by any means, electronic or mechanical, including photocopying, or posting on the internet or an intranet, without prior written permission. Permission can be requested from either ISO at the address below or ISO's member body in the country of the requester.

ISO copyright office
Case postale 56 • CH-1211 Geneva 20
Tel. + 41 22 749 01 11
Fax + 41 22 749 09 47
E-mail copyright@iso.org
Web www.iso.org

Published in Switzerland

© ISO 2015 – All rights reserved

Documents
Document Sharing Hub

Full document details: BS ISO 13041-5:2015

Contents

Page

Foreword ... **iv**
Introduction ... **v**
1 Scope ... **1**
2 Normative references ... **1**
3 Terms and definitions ... **1**
4 Preliminary remarks ... **3**
4.1 Measurement units ... 3
4.2 Reference to ISO 230-1 and ISO 230-4 ... 3
4.3 Testing sequence ... 4
4.4 Tests to be performed ... 4
4.5 Measuring instruments ... 4
4.6 Software compensation ... 4
5 Tests described in Annexes A to C ... **4**
Annex A (normative) **Kinematic tests for machines with a horizontal workholding spindle** ... **5**
Annex B (normative) **Kinematic tests for machines with a vertical workholding spindle** ... **13**
Annex C (normative) **Kinematic tests for machines with inverted vertical workholding spindles** ... **21**
Annex D (informative) **Precautions for test setup for AK6, BK6, and CK6** ... **29**
Bibliography ... **33**

© ISO 2015 – All rights reserved

Documents
Document Sharing Hub
Full document details: BS ISO 13041-5:2015

Foreword

ISO (the International Organization for Standardization) is a worldwide federation of national standards bodies (ISO member bodies). The work of preparing International Standards is normally carried out through ISO technical committees. Each member body interested in a subject for which a technical committee has been established has the right to be represented on that committee. International organizations, governmental and non-governmental, in liaison with ISO, also take part in the work. ISO collaborates closely with the International Electrotechnical Commission (IEC) on all matters of electrotechnical standardization.

The procedures used to develop this document and those intended for its further maintenance are described in the ISO/IEC Directives, Part 1. In particular the different approval criteria needed for the different types of ISO documents should be noted. This document was drafted in accordance with the editorial rules of the ISO/IEC Directives, Part 2 (see www.iso.org/directives).

Attention is drawn to the possibility that some of the elements of this document may be the subject of patent rights. ISO shall not be held responsible for identifying any or all such patent rights. Details of any patent rights identified during the development of the document will be in the Introduction and/or on the ISO list of patent declarations received (see www.iso.org/patents).

Any trade name used in this document is information given for the convenience of users and does not constitute an endorsement.

For an explanation on the meaning of ISO specific terms and expressions related to conformity assessment, as well as information about ISO's adherence to the WTO principles in the Technical Barriers to Trade (TBT), see the following URL: Foreword — Supplementary information.

The committee responsible for this document is ISO/TC 39, *Machine tools*, Subcommittee SC 2, *Test conditions for metal cutting machine tools*.

This second edition cancels and replaces the first edition (ISO 13041-5:2006), which has been technically revised.

ISO 13041 consists of the following part, under the general title *Test conditions for numerically controlled turning machines and turning centres*:

— *Part 1: Geometric tests for machines with a horizontal workholding spindle*

— *Part 2: Geometric tests for machines with a vertical workholding spindle*

— *Part 3: Geometric tests for machines with inverted vertical workholding spindles*

— *Part 4: Accuracy and repeatability of positioning of linear and rotary axes*

— *Part 5: Accuracy of speeds and interpolations*

— *Part 6: Accuracy of a finished test piece*

— *Part 7: Evaluation of contouring performance in the coordinate planes*

— *Part 8: Evaluation of thermal distortions*

© ISO 2015 – All rights reserved
Documents
Document Sharing Hub
Full document details: BS ISO 13041-5:2015

Introduction

A numerically controlled turning machine is a machine tool in which the principal motion is the rotation of the workpiece against the non-rotating cutting tool(s) and where cutting energy is provided by the motion of the workpiece which is driven by a spindle. This machine is controlled by a numerical control (NC) providing automatic function according to ISO 13041-1:2004, 3.3, and can be of single- or multi-spindle type.

A turning centre is an NC turning machine equipped with power driven tool(s) and the capacity to control orientation of the workholding and/or toolholding spindle by continuously rotating, indexing, and/or interpolating around their axes.

The objective of ISO 13041 (all parts) is to provide information as widely and as comprehensively as possible on geometric, positional, contouring, thermal, and machining tests, which can be carried out for comparison, acceptance, maintenance, or any other purpose deemed necessary by user or manufacturer.

ISO 13041 (all parts) specifies, with reference to the relevant parts of ISO 230, tests for turning centres and numerically controlled turning machines with/without tailstocks, standing alone, or integrated in flexible manufacturing systems. ISO 13041 also establishes the tolerances or maximum acceptable values for the test results corresponding to general purpose and normal accuracy turning centres and numerically controlled turning machines.

Attention should be given to the tolerances in tests AK5, BK5, and CK5, which are reduced from ISO 13041-5 (Test K5) due to improved centring procedure or practical experience that proves that the closer tolerances can be met.

© ISO 2015 – All rights reserved

Documents
Document Sharing Hub
Full document details: BS ISO 13041-5:2015

Documents
Document Sharing Hub

INTERNATIONAL STANDARD ISO 13041-5:2015(E)

Test conditions for numerically controlled turning machines and turning centres —

Part 5: Accuracy of speeds and interpolations

1 Scope

This part of ISO 13041 specifies, with references to ISO 230-1 and ISO 230-4, certain kinematic tests for numerically controlled (NC) turning machines and turning centres, concerning the spindle speeds, the feed speeds of the individual NC linear axes, and the accuracy of the paths described by the simultaneous movement of two or more NC linear and/or rotary axes.

NOTE This part of ISO 13041 applies to numerically-controlled turning machines and turning centres with horizontal, vertical, and inverted vertical type workholding spindle(s).

2 Normative references

The following documents, in whole or in part, are normatively referenced in this document and are indispensable for its application. For dated references, only the edition cited applies. For undated references, the latest edition of the referenced document (including any amendments) applies.

ISO 230-1, *Test code for machine tools — Part 1: Geometric accuracy of machines operating under no-load or quasi-static conditions*

ISO 230-4, *Test code for machine tools — Part 4: Circular tests for numerically controlled machine tools*

ISO 841, *Industrial automation systems and integration — Numerical control of machines — Coordinate system and motion nomenclature*

ISO 13041-1, *Test conditions for numerically controlled turning machines and turning centres — Part 1: Geometric tests for machines with a horizontal workholding spindle*

ISO 13041-2, *Test conditions for numerically controlled turning machines and turning centres — Part 2: Geometric tests for machines with a vertical workholding spindle*

ISO 13041-3, *Test conditions for numerically controlled turning machines and turning centres — Part 3: Geometric tests for machines with inverted vertical workholding spindles*

ISO/TR 16907[1)], *Machine tools — Numerical compensation of geometric errors*

3 Terms and definitions

For the purposes of this document, the following terms and definitions apply.

3.1
turning machine
machine tool in which the principle movement is on the rotation of the workpiece against the stationary cutting tool(s)

1) To be published.

© ISO 2015 – All rights reserved

Documents
Document Sharing Hub
Full document details: BS ISO 13041-5:2015

3.2
manual control
mode of operation where each movement of the machine is individually initiated and controlled by the operator

3.1.3
numerical control
NC
computerized numerical control
CNC
automatic control of a process performed by a device that makes use of numerical data introduced while the operation is in progress

3.4
manually controlled turning machine
turning machine whose process steps for the machining are controlled or started by an operator without support by an NC-machining program

3.5
numerically controlled turning machine
NC turning machine
turning machine that operates under numerical control (NC) or computerized numerical control (CNC)

3.6
turning centre
NC turning machine equipped with power-driven tool(s) and the capacity to orientate the work-holding spindle around its axis

Note 1 to entry: It can include additional features such as automatic tool changing from a turret and/or magazine.

3.7
numerically controlled turning machine with horizontal workholding spindle(s)
numerically controlled turning machine where the workpiece is mounted on horizontal workholding spindle(s) against the stationary cutting tool(s) and where cutting energy is brought by the workpiece and not by the tool

Note 1 to entry: This machine is controlled by a numerical control (NC) providing automatic function.

3.8
turning centre with horizontal workholding spindle(s)
turning centre having horizontal workholding spindle(s) equipped with toolholding spindles and the capacity to orientate the workholding spindle around its axis

Note 1 to entry: This machine may include additional features such as automatic toolchanging from a magazine or Y-axis motion.

3.9
numerically controlled turning machine with vertical workholding spindle(s)
numerically controlled turning machine where the workpiece is mounted on vertical workholding spindle(s) against the stationary cutting tool(s) and where cutting energy is brought by the workpiece and not by the tool

Note 1 to entry: This machine is controlled by a numerical control (NC) providing automatic function.

3.10
turning centre with vertical workholding spindle(s)
turning centre having vertical workholding spindle(s) equipped with toolholding spindles and the capacity to orientate the workholding spindle around its axis

Note 1 to entry: This machine may include additional features such as automatic toolchanging from a magazine or Y-axis motion.

© ISO 2015 – All rights reserved
Documents
Document Sharing Hub
Full document details: BS ISO 13041-5:2015

3.11
numerically controlled turning machine with inverted vertical workholding spindle(s)
NC turning machine where the workpiece is mounted on an inverted vertical workholding spindle equipped with a workholding device at the lower end of the workholding spindle

Note 1 to entry: For other types of vertical workholding spindle machine, see ISO 13041-2.

3.12
turning centre with inverted vertical workholding spindle(s)
turning centre having an inverted vertical workholding spindle equipped with a workholding device at the lower end of the vertical workholding spindle

Note 1 to entry: It can include additional features such as automatic tool changing from a magazine or Y-axis motion.

Note 2 to entry: For other types of vertical workholding spindle turning centre, see ISO 13041-2.

3.13
machine modes of operation
modes of operation of the numerically controlled or data entry devices where entries are interpreted as functions to be executed

3.14
manual mode of numerical control
non-automatic mode of numerical control of a machine in which the operator controls it without the use of pre-programmed numerical data

EXAMPLE By push button or joystick control.

3.15
manual data input mode
entry of programme data by hand at the numerical control

3.16
single block mode
mode of numerical control in which, at the initiation of the operator, only one block of control data are executed

3.17
automatic mode
mode of numerical control in which the machine operates in accordance with the programme data until stopped by the programme or the operator

4 Preliminary remarks

4.1 Measurement units

In this part of ISO 13041, all linear dimensions, deviations, and corresponding tolerances are expressed in millimetres.

4.2 Reference to ISO 230-1 and ISO 230-4

For application of this part of ISO 13041, reference shall be made to ISO 230-1, especially for the installation of the machine before testing, warming-up of spindles, and other moving parts, the description of measuring methods, and recommended accuracy of testing equipment. For tests of circular interpolation motion, reference shall be made to ISO 230-4.

© ISO 2015 – All rights reserved

Documents
Document Sharing Hub
Full document details: BS ISO 13041-5:2015

4.3 Testing sequence

The sequence in which the kinematic tests are given in no way defines the practical order of testing. In order to make the mounting of instruments or gauging easier, tests can be performed in any order, including tests described in other parts of ISO 13041.

4.4 Tests to be performed

When testing a machine, it is not always necessary or possible to carry out all the tests given in this part of ISO 13041. When the tests are required for acceptance purposes, the choice of tests relating to the components and/or the properties of the machine of interest is at the discretion of the user, in agreement with the supplier/manufacturer. The tests to be used are to be clearly stated when ordering a machine. The mere reference to this part of ISO 13041 for the acceptance tests, without specifying the tests to be carried out, and without agreement on the relevant expenses, cannot be considered as binding for any contracting party.

4.5 Measuring instruments

The measuring instruments indicated in relation to the tests given in Annexes A to C are examples only. Other instruments measuring the same quantities and having at least the same measurement uncertainty and the same resolution can be used.

In some tests, it is recommended to present test results in a graphical form (see Annex D).

4.6 Software compensation

When built-in software facilities are available for compensating geometric, positioning, contouring, and/or thermal deviations, their use during these tests shall be based on agreement between manufacturer/supplier and user, with due consideration to the machine tool intended use.

When the software compensation is used, this shall be stated in the test reports. Using the definitions given in ISO/TR 16907, it shall be noted that when software compensation is used, axes shall not be locked for test purposes.

5 Tests described in Annexes A to C

Tests in Annex A refer to horizontal workholding spindle machines (ISO 13041-1, Type 1), tests in Annex B refer to vertical workholding spindle machines (ISO 13041-2, Type 2), and tests in Annex C refer to inverted vertical workholding spindle machines (ISO 13041-3, Type 3).

© ISO 2015 – All rights reserved
Documents
Document Sharing Hub
Full document details: BS ISO 13041-5:2015

Annex A
(normative)

Kinematic tests for machines with a horizontal workholding spindle

A.1 Machine configuration and designation

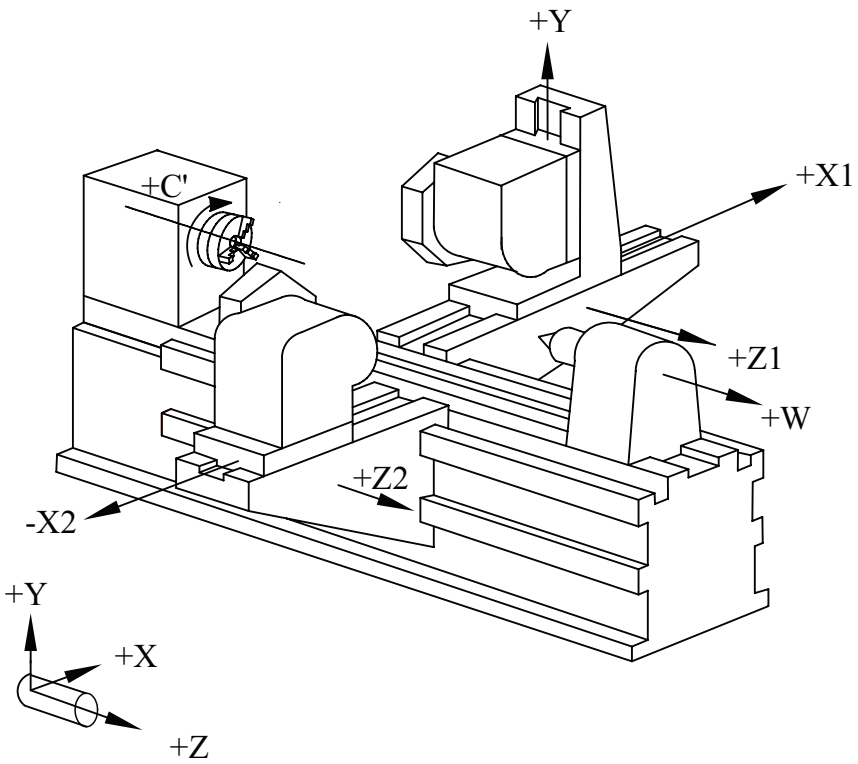

Figure A.1 — Typical example of a turning machine with a horizontal workholding spindle [[w (C') b Z X1 Y C_1 t] [w (C') b Z2 X2 C_2 t] [w (C') W {t,w}]]

Figure A.1 shows a typical example of a turning machine with a horizontal workholding spindle.

The structural configuration is described by using the structural codes to serially connect the motion axis from the workpiece side to the tool side, and vice versa. The name of axes of motion follows ISO 841. As an example, the structural code of the machine shown in Figure A.1 can be described as [[w (C') b Z X1 Y C_1 t] [w (C') b Z2 X2 C_2 t] [w (C') W {t,w}]] by connecting the motion axes from the workpiece side to the tool side. In this description, the workpiece side and the tool side are distinguished by naming the workpiece by "w", the tool by "t", and the bed by "b"; (C) stands for the spindle axis without numerical control for angular positioning. Multiple kinematic chains from the workpiece side and the tool side are all shown.

"{t,w}" in the third chain indicates that the tail stock (W or Z3) can be connected either to the workpiece or to a tool (e.g. a drill).

© ISO 2015 – All rights reserved

Documents
Document Sharing Hub
Full document details: BS ISO 13041-5:2015

A.2 Kinematic tests

A.2.1 General

Tests specified in this Annex refer, for simplicity, to the example of machine configuration depicted in Figure A.1, but they are applicable to all configurations of turning machines and turning centres with a horizontal workholding spindle.

NOTE These tests might not be used directly to predict the actual workpiece errors resulting from cutting.

A.2.2 Spindle speeds (AK1) and feed speeds (AK2)

The purpose of these tests is to check the overall accuracy of all the electric, electronic and kinematic chain in the control system between the command and the physical movement of the component.

A.2.3 Linear interpolations (AK3)

The purpose of these tests is to check the coordinated motion of two linear axes in the following two conditions:

— While these are moving either at the same speed (45°), or

— While one of these is moving at a significantly lower speed than the other (small angles).

A.2.4 Circular interpolations (AK4)

The purpose of circular interpolation motion tests is to check the coordinated motion of two linear axes along a circular path, including points in which the motion of one axis slows down to zero and the direction of movement is reversed. During these tests, axes move with variable speeds.

A.2.5 Radial interpolations (AK5)

These tests are alternative to AK4, in cases where the machine under test does not have a measurement sweep of 360° or if AK4 is otherwise not relevant. The purpose of these tests is to check the mutual behaviour of two linear axes (generally X and Z) at variable feed speeds, including points in which the feed of one axis slows down to zero and the direction of movement is reversed.

A.2.6 Circular interpolation motion by simultaneous three-axis control (X-, Y-, and C-axes) (AK6)

The purpose of these tests is to check the interpolations between the X-, Y-, and C- axes of a turning centre for clockwise and counter-clockwise(anticlockwise) contouring motions.

© ISO 2015 – All rights reserved
Documents
Document Sharing Hub
Full document details: BS ISO 13041-5:2015