BS ISO 13044-2:2021

BSI Standards Publication

Road vehicles — Fully automatic coupling systems 24 V (FACS) for heavy commercial vehicle combinations

Part 2: Electrical and pneumatic interface for 50 mm fifth wheel couplings

Documents
Document Sharing Hub

Full document details: BS ISO 13044-2:2021

National foreword

This British Standard is the UK implementation of ISO 13044-2:2021. It supersedes BS ISO 13044-2:2013, which is withdrawn.

The UK participation in its preparation was entrusted to Technical Committee AUE/13, Commercial and public service vehicles.

A list of organizations represented on this committee can be obtained on request to its committee manager.

This publication does not purport to include all the necessary provisions of a contract. Users are responsible for its correct application.

© The British Standards Institution 2021
Published by BSI Standards Limited 2021

ISBN 978 0 539 05670 9

ICS 43.040.70

Compliance with a British Standard cannot confer immunity from legal obligations.

This British Standard was published under the authority of the Standards Policy and Strategy Committee on 31 January 2021.

Amendments/corrigenda issued since publication

Date	Text affected

Documents
Document Sharing Hub

Full document details: BS ISO 13044-2:2021

INTERNATIONAL STANDARD

ISO 13044-2

Second edition
2021-01

Road vehicles — Fully automatic coupling systems 24 V (FACS) for heavy commercial vehicle combinations —

Part 2: Electrical and pneumatic interface for 50 mm fifth wheel couplings

Véhicules routiers — Dispositifs d'attelage entièrement automatiques (FACS) à 24 V pour ensembles routiers lourds —

Partie 2: Interface électrique et pneumatique pour sellettes d'attelage de 50 mm

Reference number
ISO 13044-2:2021(E)

Documents
Document Sharing Hub
© ISO 2021

Full document details: BS ISO 13044-2:2021

COPYRIGHT PROTECTED DOCUMENT

© ISO 2021

All rights reserved. Unless otherwise specified, or required in the context of its implementation, no part of this publication may be reproduced or utilized otherwise in any form or by any means, electronic or mechanical, including photocopying, or posting on the internet or an intranet, without prior written permission. Permission can be requested from either ISO at the address below or ISO's member body in the country of the requester.

ISO copyright office
CP 401 • Ch. de Blandonnet 8
CH-1214 Vernier, Geneva
Phone: +41 22 749 01 11
Email: copyright@iso.org
Website: www.iso.org

Published in Switzerland

© ISO 2021 – All rights reserved

Documents
Document Sharing Hub

Full document details: BS ISO 13044-2:2021

Contents

Page

Foreword ... **iv**
Introduction ... **v**
1 Scope ... **1**
2 Normative references ... **1**
3 Terms and definitions ... **2**
4 Requirements ... **2**
4.1 General ... 2
4.2 Tractor and semi-trailer ... 3
4.3 Mechanical interface, Manual operation ... 3
4.4 EPI module ... 3
4.5 Mating of the two EPI parts ... 3
4.6 Guiding and alignment ... 4
4.6.1 General ... 4
4.6.2 Installation requirements of EPI socket module ... 5
4.6.3 Installation requirements of semi-trailer-mounted EPI module ... 5
4.6.4 Perpendicular degree of freedom of contacts ... 6
4.6.5 Pneumatic valves in EPI socket module ... 6
4.7 Encapsulation and protection ... 6
4.7.1 General ... 6
4.7.2 EPI plug module protection cover actuation ... 6
4.7.3 Gasket between plug and socket ... 7
4.8 Automation of landing legs ... 7
4.9 ISO 11992 cable length ... 7
4.10 Mixed mode operation ... 7
5 Tests and specific requirements ... **7**
5.1 General ... 7
5.2 Visual examination ... 8
5.3 Dimensional check ... 8
5.4 Connection and disconnection ... 8
5.5 Locking device operation ... 9
5.5.1 Application ... 9
5.5.2 Requirements ... 9
5.6 Current carrying capacity ... 9
5.7 Connection resistance (voltage drop), cable capacitance and pneumatics ... 9
5.8 Current cycling ... 11
5.9 Withstand voltage ... 12
5.10 Influence of water ... 12
5.11 Protection against dust ... 12
5.12 Endurance ... 12
5.13 Vibration ... 12
5.14 Shock resistance ... 12
5.15 Drop test ... 13
5.16 Temperature/humidity cycling ... 13
5.17 Salt spray ... 13
5.18 Chemical resistance ... 13
5.19 Leakage test of pneumatic connections ... 13
5.20 Functional test of protection covers ... 13
Annex A (normative) **EPI module — Dimensional characteristics** ... **14**
Annex B (normative) **EPI module — Contact allocation** ... **23**
Annex C (informative) **Mixed mode operation** ... **25**
Bibliography ... **29**

© ISO 2021 – All rights reserved

AVA Documents
Document Sharing Hub
Full document details: BS ISO 13044-2:2021

Foreword

ISO (the International Organization for Standardization) is a worldwide federation of national standards bodies (ISO member bodies). The work of preparing International Standards is normally carried out through ISO technical committees. Each member body interested in a subject for which a technical committee has been established has the right to be represented on that committee. International organizations, governmental and non-governmental, in liaison with ISO, also take part in the work. ISO collaborates closely with the International Electrotechnical Commission (IEC) on all matters of electrotechnical standardization.

The procedures used to develop this document and those intended for its further maintenance are described in the ISO/IEC Directives, Part 1. In particular, the different approval criteria needed for the different types of ISO documents should be noted. This document was drafted in accordance with the editorial rules of the ISO/IEC Directives, Part 2 (see www.iso.org/directives).

Attention is drawn to the possibility that some of the elements of this document may be the subject of patent rights. ISO shall not be held responsible for identifying any or all such patent rights. Details of any patent rights identified during the development of the document will be in the Introduction and/or on the ISO list of patent declarations received (see www.iso.org/patents).

Any trade name used in this document is information given for the convenience of users and does not constitute an endorsement.

For an explanation of the voluntary nature of standards, the meaning of ISO specific terms and expressions related to conformity assessment, as well as information about ISO's adherence to the World Trade Organization (WTO) principles in the Technical Barriers to Trade (TBT) see www.iso.org/iso/foreword.html.

This document was prepared by Technical Committee ISO/TC 22, *Road vehicles*, Subcommittee SC 40, *Specific aspects for light and heavy commercial vehicles, busses and trailers*.

This second edition cancels and replaces the first edition (ISO 13044-2:2013), which has been technically revised. The main changes compared to the previous edition are as follows:

— changes to the normative references.

A list of all the parts in the ISO 13044 series can be found on the ISO website.

Any feedback or questions on this document should be directed to the user's national standards body. A complete listing of these bodies can be found at www.iso.org/members.html.

© ISO 2021 – All rights reserved
Documents
Document Sharing Hub
Full document details: BS ISO 13044-2:2021

Introduction

This document specifies the integrated electrical and pneumatic connections of an automated fifth wheel coupling system for articulated vehicles and related components.

Fully automated coupling systems improve safety for the driver and for the vehicle combinations. They also improve the work conditions for the driver and reduce cost for the end user.

a) Higher safety standard is achieved for example by:

— a reduction of operational accidents,

— less injured drivers because there is no need for drivers to stay in the dangerous zone between the towing and the towed vehicle while uncoupling.

b) Higher comfort level is achieved for example by:

— elimination of necessity to access the coupling, landing gears and supply lines,

— reduction of physical demands when operating the coupling and the landing gears or when climbing on or descending from chassis to manually connect or disconnect the supply lines.

c) Cost reduction for end user is achieved for example by:

— less repair and maintenance of cables and pipes,

— less inactive periods for the vehicle combination due to less damage and repair,

— new components create space for future extensions and potentials.

© ISO 2021 – All rights reserved

Documents
Document Sharing Hub
Full document details: BS ISO 13044-2:2021

Documents
Document Sharing Hub

Full document details: BS ISO 13044-2:2021

Road vehicles — Fully automatic coupling systems 24 V (FACS) for heavy commercial vehicle combinations —

Part 2: Electrical and pneumatic interface for 50 mm fifth wheel couplings

1 Scope

This document specifies the mechanical, electrical/electronic and pneumatic characteristics of a fully automated fifth wheel coupling system to ensure interchangeability between a towing vehicle and a coupled semi-trailer(s) with 24 V nominal supply voltage. The two vehicles together constitute an articulated vehicle or are part of a vehicle combination.

This document also supports the step-by-step introduction of fully automated fifth wheel coupling systems in the market. It specifies features necessary for mixed mode operation, i.e. the combination of a fully automated coupling system (FACS) equipped towing vehicle with a conventional semi-trailer, and vice versa, the combination of a conventional towing vehicle with a FACS-equipped semi-trailer.

2 Normative references

The following documents are referred to in the text in such a way that some or all of their content constitutes requirements of this document. For dated references, only the edition cited applies. For undated references, the latest edition of the referenced document (including any amendments) applies.

ISO 337, *Road vehicles — 50 semi-trailer fifth wheel coupling pin — Basic and mounting/interchangeability dimensions*

ISO 1726-1, *Road vehicles — Mechanical coupling between tractors and semi-trailers — Part 1: Interchangeability between tractors and semi-trailers for general cargo*

ISO 1726-2, *Road vehicles — Mechanical couplings between tractors and semi-trailers — Part 2: Interchangeability between low-coupling tractors and high-volume semi-trailers*

ISO 3842, *Road vehicles — Fifth wheels — Interchangeability*

ISO 6150:2018, *Pneumatic fluid power — Cylindrical quick-action couplings for maximum working pressures of 1 MPa, 1,6 MPa, and 2,5 MPa (10 bar, 16 bar and 25 bar) — Plug connecting dimensions, specifications, application guidelines and testing*

ISO 7638-1:2018, *Road vehicles — Connectors for the electrical connection of towing and towed vehicles — Part 1: Connectors for braking systems and running gear of vehicles with 24 V nominal supply voltage*

ISO 11992 (all parts), *Road vehicles — Interchange of digital information on electrical connections between towing and towed vehicles*

ISO 12098:2020, *Road vehicles — Connectors for the electrical connection of towing and towed vehicles — 15-pole connector for vehicles with 24 V nominal supply voltage*

ISO 13044-1, *Road vehicles — 24 V fully automatic coupling systems (FACS) for heavy commercial vehicle combinations — Part 1: General requirements and definitions*

ISO 16750-3:2012, *Road vehicles — Environmental conditions and testing for electrical and electronic equipment — Part 3: Mechanical loads*

AVA Documents Document Sharing Hub

© ISO 2021 – All rights reserved

Full document details: BS ISO 13044-2:2021

ISO 16750-5, *Road vehicles — Environmental conditions and testing for electrical and electronic equipment — Part 5: Chemical loads*

3 Terms and definitions

For the purposes of this document, the terms and definitions given in ISO 13044-1 and the following apply.

ISO and IEC maintain terminological databases for use in standardization at the following addresses:

— ISO Online browsing platform: available at https://www.iso.org/obp

— IEC Electropedia: available at http://www.electropedia.org/

3.1
fully automated coupling system
FACS
coupling and uncoupling system where all operations, i.e. mechanical, electrical, pneumatic and applicable auxiliary functions, are performed automatically, enabling the coupling and uncoupling process to be completed without direct manual intervention

[SOURCE: ISO 13044-1:2012, 3.3.1.3]

3.2
electrical/electronic-pneumatic interface module
EPI module
component, combining all electrical/electronic and pneumatic connections in one mating unit, consisting of two complementary parts, the *EPI plug module* (3.2.1) and the *EPI socket module* (3.2.2)

3.2.1
EPI plug module
part of the *EPI module* (3.2) containing the electric male contacts, pneumatic male connections and the alignment pins, it is permanently attached to the king pin side mounted on the *semi-trailer* (3.2.3)

3.2.2
EPI socket module
part of the *EPI module* (3.2) containing the electric female contacts, pneumatic female connections and the alignment sockets, it is permanently attached to the fifth wheel which is mounted to the tractor vehicle

3.2.3
semi-trailer
towed vehicle which is designed to be coupled to either a towing vehicle or to a dolly, and to impose a substantial vertical load either on the towing vehicle or on the dolly

3.2.4
alignment device
device placed on the trailer-side, which makes contact to the fifth wheel throat during the coupling process and centres the EPI plug relative to the EPI socket

4 Requirements

4.1 General

In order to guarantee the best functionality, comfort and safety, the use of FACS is recommended in combination with spring-brake equipped semi-trailers only. FACS does not exonerate the driver from ensuring the semi-trailer is correctly parked before coupling or uncoupling.

In order to guarantee best functionality, comfort and safety, the use of FACS is recommended for towing vehicles with height adjustable air-suspension at least on the rear axle.

© ISO 2021 – All rights reserved
Documents
Document Sharing Hub
Full document details: BS ISO 13044-2:2021

In the case of coupling systems that are not fully automatic, but utilize an automatic electro-pneumatic interface, this interface shall conform with the requirements specified within this document.

4.2 Tractor and semi-trailer

In order to ensure interchangeability between tractor vehicles and semi-trailers, the requirements of ISO 3842 and ISO 1726-1 or ISO 1726-2 shall be met for vehicles to be equipped with FACS.

4.3 Mechanical interface, Manual operation

Fifth wheels installed on FACS-equipped tractor vehicles shall conform with the requirements of ISO 3842. Fifth wheel coupling pins (king pins) installed on FACS-equipped semi-trailers shall conform with the requirements of ISO 337. In the event of a failure of the remote control it shall be possible, in an emergency, to open the coupling in at least one other way. If this requires the use of a tool, then this shall be included in the vehicle's tool kit. Any manual operation shall not lead to any damages or malfunction of the system components.

NOTE For fifth wheel versions with a throat angle other than 40° (e.g. 52°) optional versions can be allowed under the condition that the alignment device (Figure 2, key 2 or Figure 1, key 2) uses a corresponding angle. In this case the interchangeability will only be ensured within the individual version.

4.4 EPI module

4.4.1 EPI plug modules and EPI socket modules in accordance with this document shall provide the following electrical connections with 24 V nominal supply voltage:

— 7 poles for the electrical connection of the braking systems and running gear (incl. 2 poles for the CAN based communication conformant to ISO 11992-1 and ISO 11992–2);

— 23 poles for the electrical connection of equipment other than braking systems and running gear (incl. 2 poles for the CAN-based communication conformant to ISO 11992-1 and ISO 11992–3).

The dimensional characteristics and location of the EPI module shall be in accordance with the specifications of Annex A. Number, location and functionality shall be in accordance with the specifications of Annex B. Electrical contacts shall only be used as specified.

CAUTION — Using the electrical contacts for non-specified purposes (including ground) may cause damage to equipment. Any deviation from the contact allocation specified in Table 1 is not allowed. However, depending on legislation and customer demand, only some of the 30 electrical contacts may be required.

4.4.2 EPI plug modules and EPI socket modules in accordance with this document shall provide connections for the following two pneumatic braking lines:

— one control line;

— one supply line.

The dimensional characteristics of the pneumatic connections shall be in accordance with the specifications of Annex A.

4.5 Mating of the two EPI parts

The mating of the EPI plug module and the EPI socket module shall take place automatically during the coupling process as illustrated in Figure A.1.

© ISO 2021 – All rights reserved

Documents
Document Sharing Hub
Full document details: BS ISO 13044-2:2021

4.6 Guiding and alignment

4.6.1 General

The guiding and alignment of the EPI module shall be made by a rigid alignment pin in the middle plus two outer pins, which are preferably “self-aligning” designed to provide low forces during EPI mating; see Figure A.5.

The central alignment pin shall have the ability to align both EPI parts within a range ± 5 mm in both horizontal and vertical directions. The two outer pins shall ensure the parallel orientation of both EPI parts for connection alignment.

The positional tolerance between the contact surface of the alignment device and the fifth wheel shall be a maximum of ±2 mm, according to Figure 1.

Dimensions in millimetres

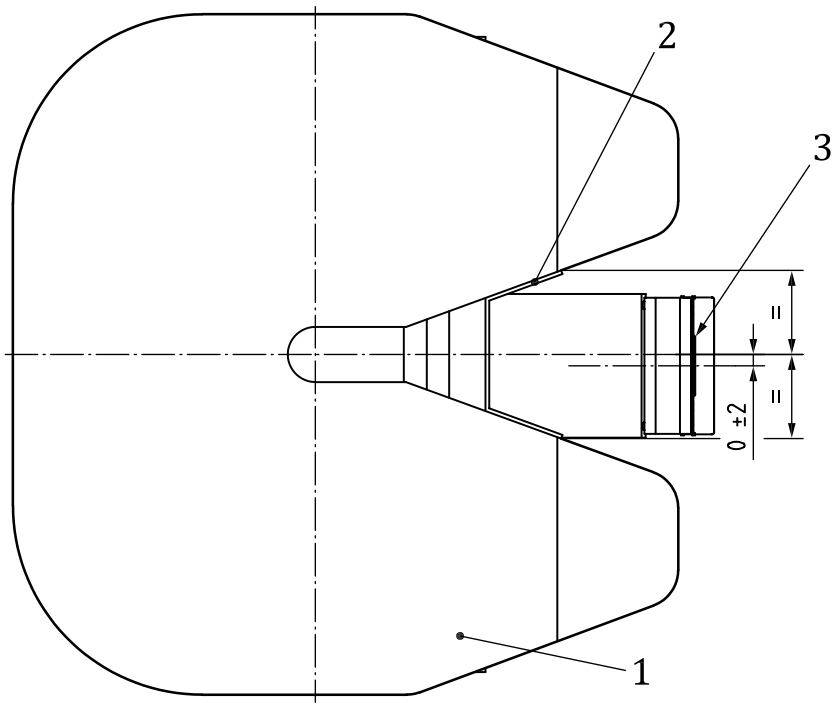

Key

1 fifth wheel

2 alignment device (movable in length direction, shown in contact position, see Figure 2)

3 EPI central alignment socket

Figure 1 — EPI female module positioning tolerance (displaced shown)

© ISO 2021 – All rights reserved
Documents
Document Sharing Hub
Full document details: BS ISO 13044-2:2021