BS ISO 13579-4:2013

BSI Standards Publication

# Industrial furnaces and associated processing equipment — Method of measuring energy balance and calculating efficiency

## Part 4: Furnaces with protective or reactive atmosphere

bsi.

...making excellence a habit.™

Document Sharing Hub

Full document details: BS ISO 13579-4:2013

## National foreword

This British Standard is the UK implementation of ISO 13579-4:2013.

The UK participation in its preparation was entrusted to Technical Committee RHE/13, Oil burning equipment.

A list of organizations represented on this committee can be obtained on request to its secretary.

This publication does not purport to include all the necessary provisions of a contract. Users are responsible for its correct application.

© The British Standards Institution 2013. Published by BSI Standards Limited 2013

ISBN 978 0 580 72513 5

ICS 25.180.01

**Compliance with a British Standard cannot confer immunity from legal obligations.**

This British Standard was published under the authority of the Standards Policy and Strategy Committee on 31 January 2013.

**Amendments issued since publication**

| Date | Text affected |
|---|---|

Documents
Document Sharing Hub

Full document details: BS ISO 13579-4:2013

# INTERNATIONAL STANDARD

# ISO 13579-4

First edition
2013-01-15

## Industrial furnaces and associated processing equipment — Method of measuring energy balance and calculating efficiency —

## Part 4: Furnaces with protective or reactive atmosphere

*Fours industriels et équipements associés — Méthode de mesure du bilan énergétique et de calcul de l'efficacité —*

*Partie 4: Fours à atmosphère contrôlée ou active*

Reference number
ISO 13579-4:2013(E)

Documents
Document Sharing Hub

© ISO 2013

Full document details: BS ISO 13579-4:2013

**COPYRIGHT PROTECTED DOCUMENT**

© ISO 2013

All rights reserved. Unless otherwise specified, no part of this publication may be reproduced or utilized in any form or by any means, electronic or mechanical, including photocopying and microfilm, without permission in writing from either ISO at the address below or ISO's member body in the country of the requester.

ISO copyright office
Case postale 56 • CH-1211 Geneva 20
Tel. + 41 22 749 01 11
Fax + 41 22 749 09 47
E-mail copyright@iso.org
Web www.iso.org

Published in Switzerland



Documents
Document Sharing Hub
© ISO 2013 – All rights reserved

Full document details: BS ISO 13579-4:2013

# Contents

Page

**Foreword** ..... v

**Introduction** ..... vi

**1 Scope** ..... 1

**2 Normative references** ..... 1

**3 Terms and definitions** ..... 1
**3.1 Terms relating to type of energy used in this part of ISO 13579** ..... 2

**4 Symbols** ..... 5

**5 Basic principles** ..... 7
**5.1 General** ..... 7
**5.2 Energy flow diagram** ..... 10
**5.3 Process Heating Assessment Survey Tool** ..... 10

**6 Basic conditions of measurement and calculation** ..... 10
**6.1 State of furnace** ..... 10
**6.2 Duration of measurement** ..... 10
**6.3 Unit of specific energy intensity** ..... 10
**6.4 Reference conditions** ..... 10
**6.5 Unit of amount of gas** ..... 10
**6.6 Fuel** ..... 10

**7 Type of energy used in this part of ISO 13579** ..... 10
**7.1 General** ..... 10
**7.2 Energy balance** ..... 10
**7.3 Thermal energy balance** ..... 12
**7.4 Energy balance of electrical generation** ..... 13
**7.5 Recycled energy** ..... 14

**8 Measurement method** ..... 14
**8.1 General** ..... 14
**8.2 Fuel** ..... 14
**8.3 Combustion air and exhaust gas** ..... 15
**8.4 Controlled atmospheric gas** ..... 17
**8.5 Products** ..... 17
**8.6 Temperature of furnace surface** ..... 17
**8.7 Furnace inner wall temperature** ..... 17
**8.8 Inner furnace pressure** ..... 17
**8.9 Cooling water** ..... 17
**8.10 Electrical auxiliary equipment** ..... 18
**8.11 Generation of utilities** ..... 18
**8.12 Recycled energy** ..... 18

**9 Calculations** ..... 18
**9.1 General provisions** ..... 18
**9.2 Total energy input** ..... 18
**9.3 Total energy output** ..... 19
**9.4 Total energy efficiency** ..... 21

**10 Energy balance evaluation report** ..... 22

**Annex A** (informative) **Reference data** ..... 23

**Annex B** (informative) **Report of energy balance and efficiency of a continuous gas carburizing furnace (whole process) — Example** ..... 25

Documents
Document Sharing Hub

© ISO 2013 – All rights reserved


Full document details: BS ISO 13579-4:2013

**Annex C** (informative) **Report of measurement of energy balance and calculation of efficiency of a continuous gas carburizing furnace — Example** ..... **33**

**Annex D** (informative) **Assessment of uncertainty of total energy efficiency** ..... **42**

**Bibliography** ..... **45**



© ISO 2013 – All rights reserved

Documents
Document Sharing Hub

Full document details: BS ISO 13579-4:2013

# Foreword

ISO (the International Organization for Standardization) is a worldwide federation of national standards bodies (ISO member bodies). The work of preparing International Standards is normally carried out through ISO technical committees. Each member body interested in a subject for which a technical committee has been established has the right to be represented on that committee. International organizations, governmental and non-governmental, in liaison with ISO, also take part in the work. ISO collaborates closely with the International Electrotechnical Commission (IEC) on all matters of electrotechnical standardization.

International Standards are drafted in accordance with the rules given in the ISO/IEC Directives, Part 2.

The main task of technical committees is to prepare International Standards. Draft International Standards adopted by the technical committees are circulated to the member bodies for voting. Publication as an International Standard requires approval by at least 75 % of the member bodies casting a vote.

Attention is drawn to the possibility that some of the elements of this document may be the subject of patent rights. ISO shall not be held responsible for identifying any or all such patent rights.

ISO 13579-4 was prepared by Technical Committee ISO/TC 244, *Industrial furnaces and associated thermal processing equipment*.

ISO 13579 consists of the following parts, under the general title *Industrial furnaces and associated processing equipment — Method of measuring energy balance and calculating efficiency*:

— *Part 1: General methodology*

— *Part 3: Reheating furnaces for steel*

— *Part 2: Batch-type aluminium melting furnaces*

— *Part 4: Furnaces with protective or reactive atmosphere*

© ISO 2013 – All rights reserved


Documents
Document Sharing Hub
Full document details: BS ISO 13579-4:2013

## Introduction

All calculations within this part of ISO 13579 are based on the location of equipment at reference conditions.

NOTE For equipment intended to be installed above or below sea level, it is expected that the impact of the elevation be calculated for that location.


© ISO 2013 – All rights reserved
Documents
Document Sharing Hub
Full document details: BS ISO 13579-4:2013

INTERNATIONAL STANDARD ISO 13579-4:2013(E)

# Industrial furnaces and associated processing equipment — Method of measuring energy balance and calculating efficiency —

## Part 4: Furnaces with protective or reactive atmosphere

## 1 Scope

This part of ISO 13579 specifies general methodology for measuring energy balance and calculating the efficiency of the process involving furnaces with protective or reactive atmosphere as designed by the furnace manufacturers. This general methodology includes:

— measurement methods;

— calculations (general calculation);

— evaluation report.

This part of ISO 13579 is not applicable to any efficiencies related to the process itself outside of furnaces with protective or reactive atmosphere.

## 2 Normative references

The following documents, in whole or in part, are normatively referenced in this document and are indispensable for its application. For dated references, only the edition cited applies. For undated references, the latest edition of the referenced document (including any amendments) applies.

ISO 13574, *Industrial furnaces and associated processing equipment — Vocabulary*

ISO 13579-1:2013, *Industrial furnaces and associated processing equipment — Method of measuring energy balance and calculating efficiency — Part 1: General methodology*

## 3 Terms and definitions

For the purposes of this document, the terms and definitions given in ISO 13574 and the following apply.

© ISO 2013 – All rights reserved



Documents
Document Sharing Hub
Full document details: BS ISO 13579-4:2013

## 3.1 Terms relating to type of energy used in this part of ISO 13579

### 3.1.1 Total energy input

**3.1.1.1**
**total energy input**
$E_{input}$
aggregate of measured energy input brought into the area of energy balance, and which is composed of fuel equivalent energy and other energy input

### 3.1.2 Fuel equivalent energy

**3.1.2.1**
**fuel equivalent energy**
$E_{fe}$
aggregate of input energy which is composed of calorific value of fuel, calorific value of waste, calorific value of source gas of atmospheric gas and fuel equivalent energy of electricity

**3.1.2.2**
**calorific value of fuel**
$E_{h,fuel}$
heat of combustion of fuel which is consumed and used for heating products in the area of energy balance

**3.1.2.3**
**calorific value of source gas of atmospheric gas**
$E_{fe,atm,cal}$
calorific value of source gas of atmospheric gas which is used as protective and reactive atmospheres

**3.1.2.4**
**fuel equivalent energy of electricity**
$E_{fe,el}$
aggregate of fuel equivalent energy of electricity converted from each occurrence of electrical energy consumptions in the area of energy balance

### 3.1.3 Other energy input

**3.1.3.1**
**other energy input**
$E_{others}$
energy that is composed of sensible heat of fuel, sensible heat of combustion air or other oxidant, sensible heat of atomization agent for liquid fuel, heat of reaction and sensible heat of infiltration air

**3.1.3.2**
**heat of reaction**
$E_{react}$
heat generated by the oxidation reaction of products in the area of energy balance measurement

EXAMPLE The formation of scale of steel products during the oxidation reaction.

**3.1.3.3**
**sensible heat of infiltration air**
$E_{s,infilt}$
sensible heat of air that leaks into the furnace through supply/discharge port or gaps in the operating systems of the furnace

Note 1 to entry This term may be replaced with "sensible heat of false air".


© ISO 2013 – All rights reserved
Documents
Document Sharing Hub
Full document details: BS ISO 13579-4:2013

### 3.1.4 Total energy output

**3.1.4.1**
**total energy output**
$E_{output}$
total measured energy output emitted from or consumed in the area of energy balance which is composed of thermal energy output, energy consumed in electrical auxiliary equipment, energy used for generation of utility and electrical generation loss.

### 3.1.5 Thermal energy output

**3.1.5.1**
**thermal energy output**
$E_{therm,out}$
aggregate of thermal energy which is emitted from the area of energy balance

Note 1 to entry Thermal energy output is composed of energy defined in 3.1.5.2 to 3.1.5.12.

**3.1.5.2**
**effective energy**
$E_{effect}$
enthalpy that products gain in the area of energy balance

**3.1.5.3**
**jig loss**
$E_{l,jig}$
enthalpy that jigs for handling the products gained in the area of energy balance measurement

**3.1.5.4**
**sensible heat of exhaust gas**
$E_{exhaust}$
sensible heat of expended gas which is emitted from the area of energy balance measurement

**3.1.5.5**
**heat storage loss by batch furnace**
$E_{l,storage}$
sensible heat which a furnace refractory gains within a batch furnace operation cycle

**3.1.5.6**
**sensible heat loss of atmospheric gas**
$E_{s,atm}$
sensible heat which atmospheric gas for thermal processing gains through the area of energy balance

**3.1.5.7**
**wall loss**
$E_{l,wall}$
thermal energy emitted from the surface of industrial furnaces by radiation and convection

**3.1.5.8**
**heat loss of discharged blowout from furnace opening**
$E_{l,blowout}$
sensible heat of blowout gas emitted from the furnace opening

**3.1.5.9**
**heat loss of radiation from furnace opening**
$E_{l,opening}$
thermal energy emitted from the furnace opening by radiation

© ISO 2013 – All rights reserved

Documents
Document Sharing Hub
Full document details: BS ISO 13579-4:2013

**3.1.5.10**
**heat loss from furnace parts installed through furnace wall**
$E_{l,parts}$
thermal energy emitted through furnace parts which are installed through furnace wall

EXAMPLE As in the case of a roller hearth furnace.

**3.1.5.11**
**cooling water loss**
$E_{l,cw}$
thermal energy brought out by cooling water from the area of energy balance measurement

**3.1.5.12**
**other losses**
$E_{l,other}$
unmeasured thermal energy losses from the area of energy balance

**3.1.6 Energy consumed in electrical auxiliary equipment**

**3.1.6.1**
**energy consumed in electrical auxiliary equipment**
$E_{aux}$
energy utilized in electrical auxiliary equipment which is composed of energy consumed in installed electrical auxiliary equipment and energy used for fluid transfer

**3.1.6.2**
**energy consumed in installed electrical auxiliary equipment**
$E_{aux,installed}$
aggregate of total energy used in installed electrical auxiliary equipment (e.g. fans, pumps) installed in the area of energy balance

**3.1.6.3**
**energy used for fluid transfer**
$E_{aux,fluid}$
aggregate of energy for fluid transfer calculated from the property of the fluid

EXAMPLE For cooling water, fuel, etc.

**3.1.7 energy used for generation of utility**

**3.1.7.1**
**utility**
service other than fuel and electricity provided to the area of energy balance

EXAMPLE Oxygen, steam and atmospheric gas.

**3.1.7.2**
**energy used for generation of utilities**
$E_{utility}$
aggregate of energy for the generation of utilities used in the area of energy balance

**3.1.8 Electrical generation loss**

**3.1.8.1**
**electrical generation loss**
$E_{l,eg}$
energy loss in electrical generation which is backcalculated from fuel equivalent energy and total consumed electrical energy


© ISO 2013 – All rights reserved
Documents
Document Sharing Hub
Full document details: BS ISO 13579-4:2013

### 3.1.9 Thermal energy balance

**3.1.9.1**
**thermal energy input from electrical heating source**
heat energy being entered from an electrical heating source, such as an electrical heater emitted to the area of energy balance

**3.1.9.2**
**circulating heat**
heat that circulates within equipment or system installed in the area of energy balance

### 3.1.10 Energy balance of electrical generation

**3.1.10.1**
**total consumed electrical energy**
$E_{e,total}$
aggregate of electrical energy which is consumed in the area of energy balance and equal to the sum of thermal energy input from electrical heating source, energy consumed in electrical auxiliary equipment and electrical energy used for generation of utility

**3.1.10.2**
**electrical energy used for generation of utilities**
$E_{e,utility}$
aggregate of electrical energy consumed for generation of utilities (e.g. generation of oxygen) used in the area of energy balance

### 3.1.11 Recycled energy

**3.1.11.1**
**recycled energy**
$E_{re}$
energy that is regenerated from the wasted thermal energy from the area of energy balance

EXAMPLE Energy reused in waste gas boiler.

## 4 Symbols

For the purposes of this document, the following symbols apply.

NOTE Tons used are metric tons.

NOTE 2 For the units of volume of gas, see 6.5.

| Symbol | Meaning | Unit |
|---|---|---|
| $c_{pm,p2}$ | mean specific heat of products between $T_{p2}$ and 273,15 K | kJ/(kg·K) |
| $c_{pm,ps}$ | mean specific heat of products between $T_s$ and 273,15 K | kJ/(kg·K) |
| $E_{aux}$ | energy consumed in electrical auxiliary equipment per ton of products | kJ/t |
| $E_{aux,fluid}$ | aggregate of energy used for fluid transfer per ton of products | kJ/t |
| $E_{aux,installed}$ | aggregate of energy used in installed electrical auxiliary equipment per ton of products | kJ/t |
| $E_{effect}$ | effective energy per ton of products | kJ/t |
| $E_{exhaust}$ | sensible heat of exhaust gas per ton of products | kJ/t |
| $E_{fe}$ | fuel equivalent energy per ton of products | kJ/t |
| $E_{h,fuel}$ | calorific value of fuel per ton of products | kJ/t |

© ISO 2013 – All rights reserved

Documents
Document Sharing Hub
Full document details: BS ISO 13579-4:2013

| Symbol | Meaning | Unit |
|---|---|---|
| $E_{input}$ | total energy input per ton of products | kJ/t |
| $E_{l,blowout}$ | heat loss of discharged blowout from furnace opening per ton of products | kJ/t |
| $E_{l,cw}$ | cooling water loss per ton of products | kJ/t |
| $E_{l,eg}$ | energy loss in electrical generation | kJ/t |
| $E_{l,jig}$ | jig loss per ton of products | kJ/t |
| $E_{l,opening}$ | heat loss of radiation from furnace opening per ton of products | kJ/t |
| $E_{l,other}$ | other losses per ton of products | kJ/t |
| $E_{l,parts}$ | heat loss from furnace parts installed through furnace wall | kJ/t |
| $E_{l,storage}$ | heat storage loss by batch furnace per ton of products | kJ/t |
| $E_{l,wall}$ | wall loss per ton of products | kJ/t |
| $E_{others}$ | other energy input per ton of products | kJ/t |
| $E_{p2}$ | sensible heat (or enthalpy) of products at the time when products are extracted from the area of energy balance per ton of products | kJ/t |
| $E_{react}$ | heat of reaction per ton of products | kJ/t |
| $E_{re}$ | energy regenerated from the wasted thermal energy per ton of products | |
| $E_{s,air}$ | sensible heat of combustion air or other oxydant per ton of products | kJ/t |
| $E_{s,atm}$ | sensible heat loss of atmospheric gas per ton of products | kJ/t |
| $E_{s,atomize}$ | sensible heat of atomization agent per ton of products | kJ/t |
| $E_{s,fuel}$ | sensible heat of fuel per ton of products | kJ/t |
| $E_{s,infilt}$ | sensible heat of infiltration air per ton of products | kJ/t |
| $E_{s,oxid}$ | sensible heat of oxidized substance per ton of products | kJ/t |
| $E_{therm,out}$ | thermal (output) energy per ton of products | kJ/t |
| $E_{utility}$ | energy used for generation of utilities per ton of products | kJ/t |
| $E_{u,atm,gen}$ | energy used for generation of atmospheric gas per ton of products | kJ/t |
| $E_{u,atm,cal}$ | calorific value of source gas of atmospheric gas per ton of products | kJ/t |
| $E_{u,oxy}$ | energy for generation of oxygen per ton of products | kJ/t |
| $E_{u,steam}$ | energy for generation of steam per ton of products | kJ/t |
| $M_{loss}$ | loss of mass per ton of products | kg/t |
| $M_p$ | mass of products | kg or t |
| $T_{p1}$ | average temperature of products at the time of loading to the area of energy balance | K |
| $T_{p2}$ | average temperature of products at the time of extraction from the area of the energy balance | K |
| $\eta_1$ | total energy efficiency | — |
| $\eta_e$ | regional electrical generation efficiency | — |
| $\sigma_1$ | absolute error of thermocouple | °C |
| $\sigma_2$ | absolute error of compensation lead wire | °C |
| $\sigma_3$ | absolute error of output device of thermocouple | °C |


© ISO 2013 – All rights reserved
Documents
Document Sharing Hub
Full document details: BS ISO 13579-4:2013

# 5 Basic principles

## 5.1 General

The area of energy balance measurement shall be determined.

NOTE Examples of the determination of the area of energy balance measurement of furnaces with protective or reactive atmospheres are shown in Figure 1 and Figure 2.

The following aspects shall be included in the energy balance measurement:

a) energy input:

— fuel equivalent energy, $E_{fe}$;

— other energy input, $E_{others}$;

b) Energy output;

— thermal energy output, $E_{therm,out}$;

— energy consumed in electrical auxiliary equipment, $E_{aux}$;

— energy used for generation of utilities, $E_{utilities}$;

— electrical generation loss, $E_{l,eg}$.

Determine the energy input and energy output which goes into and comes out of the area of energy balance based on the measurement data.

The total energy input into the area shall balance the total energy output from the area.

The result of energy balance measurement is required to be summarized into energy input and energy output in an energy balance sheet with necessary information, such as equipment summary, measurement condition and measurement data.

Thermal energy balance and electrical generation may be created as subcategories (see 7.3 and 7.4).

© ISO 2013 – All rights reserved

Documents
Document Sharing Hub
Full document details: BS ISO 13579-4:2013

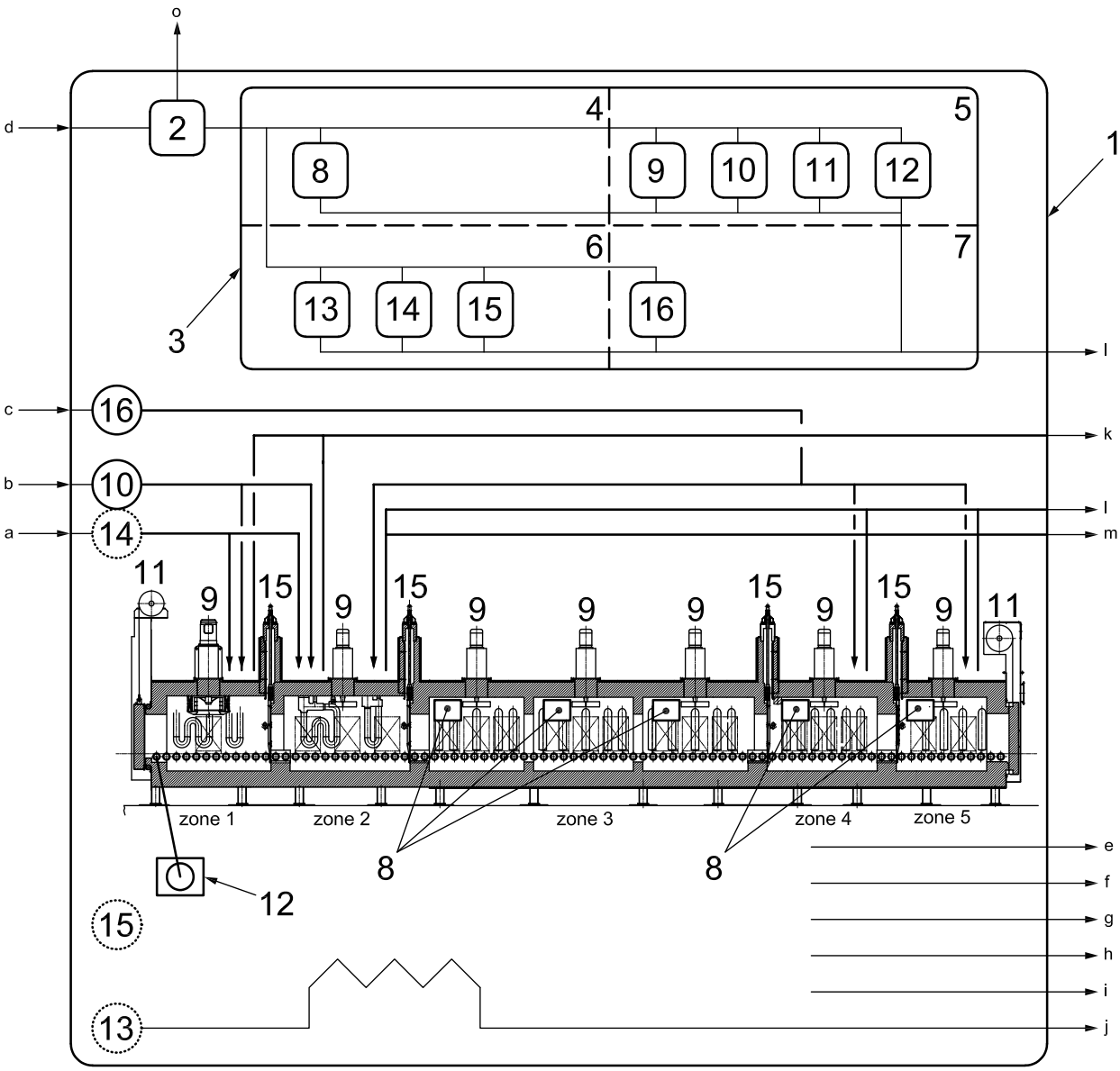


**Key**

1 area of energy balance
2 electrical generation
3 electrical auxiliary equipment
4 electrical heating equipment
5 installed electrical auxiliary equipment
6 equipment for fluid transfer
7 equipment for generation of utilities
8 electrical heater
9 RC fan
10 combustion blower
11 motor (door)
12 motor (roller hearth drive)
13 cooling water pump
14 fuel transfer equipment
15 compressor and air cylinder for internal door
16 atmospheric gas generator

[a] Sensible heat of fuel.
[b] Sensible heat of combustion air.
[c] Calorific value of source gas of atmospheric gas.
[d] Fuel equivalent energy of electricity.
[e] Effective energy.
[f] Wall loss.
[g] Heat loss of radiation from furnace opening.
[h] Heat loss from parts through furnace wall.
[i] Jig loss.
[j] Cooling water loss.
[k] Sensible heat of exhaust gas.
[l] Calorific value of source gas of atmospheric gas.
[m] Sensible heat loss of atmospheric gas.
[n] Energy consumed in electrical auxiliary equipment.
[o] Electrical generation loss.

**Figure 1 — Example of determination of the area of energy balance — Continuous carburizing furnace**


© ISO 2013 – All rights reserved
Documents
Document Sharing Hub
Full document details: BS ISO 13579-4:2013

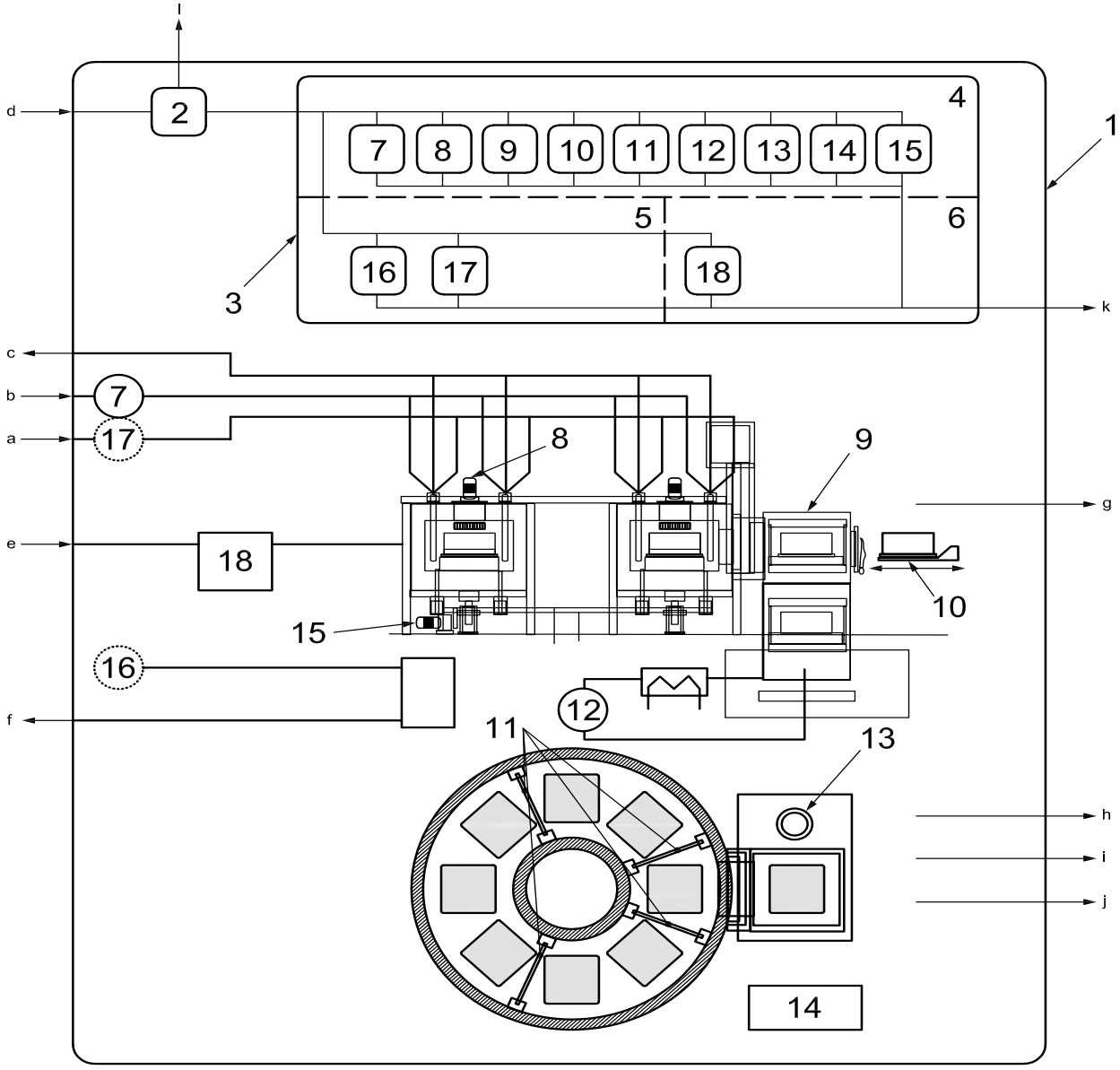


**Key**

1 area of energy balance
2 electrical generation
3 electrical auxiliary equipment
4 installed electrical auxiliary equipment
5 equipment for fluid transfer
6 equipment for generation of utilities
7 combustion fan
8 recirculation fan
9 elevator drive
10 charging and discharging
11 intermediate door
12 oil pump
13 oil agitator
14 control unit
15 rotary hearth drive
16 cooling water pump
17 fuel transfer equipment
18 atmospheric gas generator

[a] Sensible heat of fuel.
[b] Sensible heat of combustion air.
[c] Sensible heat of exhaust gas.
[d] Fuel equivalent energy of electricity.
[e] Calorific value of source gas of atmospheric gas.
[f] Cooling water loss.
[g] Calorific value of source gas of atmospheric gas.
[h] Effective energy.
[i] Heat loss from furnace (e.g. wall loss).
[j] Sensible heat loss of process gas.
[k] Energy consumed in electrical auxiliary equipment.
[l] Electrical generation loss.

**Figure 2 — Example of determination of the area of energy balance — Rotary hearth furnace**

© ISO 2013 – All rights reserved

Documents
Document Sharing Hub
Full document details: BS ISO 13579-4:2013