BS ISO 13909-4:2016

BSI Standards Publication

Hard coal and coke — Mechanical sampling

Part 4: Coal — Preparation of test samples

Documents
Document Sharing Hub

Full document details: BS ISO 13909-4:2016

National foreword

This British Standard is the UK implementation of ISO 13909-4:2016. It supersedes BS ISO 13909-4:2001 which is withdrawn.

The UK participation in its preparation was entrusted to Technical Committee PTI/16, Solid mineral fuels.

A list of organizations represented on this committee can be obtained on request to its secretary.

This publication does not purport to include all the necessary provisions of a contract. Users are responsible for its correct application.

© The British Standards Institution 2016.
Published by BSI Standards Limited 2016

ISBN 978 0 580 83177 5

ICS 73.040

Compliance with a British Standard cannot confer immunity from legal obligations.

This British Standard was published under the authority of the Standards Policy and Strategy Committee on 30 June 2016.

Amendments/corrigenda issued since publication

Date	Text affected

Documents
Document Sharing Hub

Full document details: BS ISO 13909-4:2016

INTERNATIONAL STANDARD

ISO 13909-4

Second edition
2016-07-01

Hard coal and coke — Mechanical sampling —

Part 4:
Coal — Preparation of test samples

Houille et coke — Échantillonnage mécanique —

Partie 4: Charbon — Préparation des échantillons pour essai

Reference number
ISO 13909-4:2016(E)

Documents
Document Sharing Hub
© ISO 2016

Full document details: BS ISO 13909-4:2016

COPYRIGHT PROTECTED DOCUMENT

© ISO 2016, Published in Switzerland

All rights reserved. Unless otherwise specified, no part of this publication may be reproduced or utilized otherwise in any form or by any means, electronic or mechanical, including photocopying, or posting on the internet or an intranet, without prior written permission. Permission can be requested from either ISO at the address below or ISO's member body in the country of the requester.

ISO copyright office
Ch. de Blandonnet 8 • CP 401
CH-1214 Vernier, Geneva, Switzerland
Tel. +41 22 749 01 11
Fax +41 22 749 09 47
copyright@iso.org
www.iso.org

© ISO 2016 – All rights reserved

Documents
Document Sharing Hub

Full document details: BS ISO 13909-4:2016

Contents

Page

Foreword ..... **v**
Introduction ..... **vi**
1 Scope **1**
2 Normative references **1**
3 Terms and definitions **1**
4 Precision of sample preparation **1**
5 Constitution of a sample **2**
5.1 Introduction 2
5.2 Combination of increments 2
5.2.1 Time-basis sampling 2
5.2.2 Mass-basis sampling 2
5.3 Combination of samples 3
6 Division **3**
6.1 General 3
6.2 Mechanical methods 10
6.2.1 General 10
6.2.2 Mass of cut 10
6.2.3 Interval between cuts 10
6.2.4 Division of individual increments 10
6.2.5 Division of samples 13
6.3 Manual methods 14
6.3.1 Riffle method 14
6.3.2 Flattened-heap method 15
6.3.3 Strip-mixing and splitting method 17
7 Reduction **19**
7.1 General 19
7.2 Reduction mills 19
8 Mixing **19**
9 Air-drying **19**
10 Preparation of samples for specific tests **20**
10.1 Types of test samples 20
10.2 Preparation of samples for determination of total moisture only 20
10.2.1 General 20
10.2.2 Storage 22
10.2.3 Sample reduction 22
10.2.4 Sample division 23
10.3 Preparation of samples for general analysis only 23
10.3.1 General 23
10.3.2 Air-drying 23
10.3.3 Reduction and division 23
10.4 Common samples 24
10.4.1 General 24
10.4.2 Extraction of moisture sample by mechanical division 25
10.4.3 Extraction of moisture sample by manual method 25
10.5 Preparation of size-analysis sample 26
10.6 Preparation of samples for other tests 27
11 Reserve sample **28**
12 Design of equipment for preparation **28**
12.1 Dividers 28

AVA Documents
Document Sharing Hub

© ISO 2016 – All rights reserved

Full document details: BS ISO 13909-4:2016

12.2 Design of cutters for falling-stream dividers ... 28
12.2.1 General ... 28
12.2.2 Cutter velocity ... 29
12.3 Preparation systems ... 29
12.3.1 General ... 29
12.3.2 Design criteria ... 29
12.3.3 Abnormal operation ... 30
12.4 Provision for checking for precision ... 30
12.5 Provision for testing for bias ... 30

Bibliography ... 31

© ISO 2016 – All rights reserved
Documents
Document Sharing Hub
Full document details: BS ISO 13909-4:2016

Foreword

ISO (the International Organization for Standardization) is a worldwide federation of national standards bodies (ISO member bodies). The work of preparing International Standards is normally carried out through ISO technical committees. Each member body interested in a subject for which a technical committee has been established has the right to be represented on that committee. International organizations, governmental and non-governmental, in liaison with ISO, also take part in the work. ISO collaborates closely with the International Electrotechnical Commission (IEC) on all matters of electrotechnical standardization.

The procedures used to develop this document and those intended for its further maintenance are described in the ISO/IEC Directives, Part 1. In particular the different approval criteria needed for the different types of ISO documents should be noted. This document was drafted in accordance with the editorial rules of the ISO/IEC Directives, Part 2 (see www.iso.org/directives).

Attention is drawn to the possibility that some of the elements of this document may be the subject of patent rights. ISO shall not be held responsible for identifying any or all such patent rights. Details of any patent rights identified during the development of the document will be in the Introduction and/or on the ISO list of patent declarations received (see www.iso.org/patents).

Any trade name used in this document is information given for the convenience of users and does not constitute an endorsement.

For an explanation on the meaning of ISO specific terms and expressions related to conformity assessment, as well as information about ISO's adherence to the WTO principles in the Technical Barriers to Trade (TBT), see the following URL: Foreword — Supplementary information.

The committee responsible for this document is ISO/TC 27, *Solid mineral fuels*, Subcommittee SC 4, *Sampling*.

This second edition cancels and replaces the first edition (ISO 13909-4:2001), which has been technically revised.

ISO 13909 consists of the following parts, under the general title *Hard coal and coke — Mechanical sampling*:

— *Part 1: General introduction*

— *Part 2: Coal — Sampling from moving streams*

— *Part 3: Coal — Sampling from stationary lots*

— *Part 4: Coal — Preparation of test samples*

— *Part 5: Coke — Sampling from moving streams*

— *Part 6: Coke — Preparation of test samples*

— *Part 7: Methods for determining the precision of sampling, sample preparation and testing*

— *Part 8: Methods of testing for bias*

© ISO 2016 – All rights reserved

Documents
Document Sharing Hub
Full document details: BS ISO 13909-4:2016

Introduction

The objective of sample preparation is to prepare one or more test samples from the primary increments for subsequent analysis. The requisite mass and particle size of the test sample depend on the test to be carried out.

The process of sample preparation may involve constitution of samples, reduction, division, mixing and drying, or all or a combination of these.

Primary increments may be prepared individually as test samples or combined to constitute samples either as taken or after having been prepared by reduction and/or division. Samples may either be prepared individually as test samples or combined on a weighted basis to constitute a further sample.

When difficulty in handling the coal or coals being sampled is expected at a particular stage in sample preparation, or if there is a likelihood of losing moisture by evaporation, it is necessary to withdraw the sample or increment from the on-line system at the stage immediately prior to the point of difficulty and proceed off-line.

© ISO 2016 – All rights reserved
Documents
Document Sharing Hub
Full document details: BS ISO 13909-4:2016

Hard coal and coke — Mechanical sampling —

Part 4: Coal — Preparation of test samples

1 Scope

This part of ISO 13909 describes the preparation of samples of coal from the combination of primary increments to the preparation of samples for specific tests.

2 Normative references

The following documents, in whole or in part, are normatively referenced in this document and are indispensable for its application. For dated references, only the edition cited applies. For undated references, the latest edition of the referenced document (including any amendments) applies.

ISO 589, *Hard coal — Determination of total moisture*

ISO 3310-1, *Test sieves — Technical requirements and testing — Part 1: Test sieves of metal wire cloth*

ISO 13909-1, *Hard coal and coke — Mechanical sampling — Part 1: General introduction*

ISO 13909-2, *Hard coal and coke — Mechanical sampling — Part 2: Coal — Sampling from moving streams*

ISO 13909-3, *Hard coal and coke — Mechanical sampling — Part 3: Coal — Sampling from stationary lots*

ISO 13909-7, *Hard coal and coke — Mechanical sampling — Part 7: Methods for determining the precision of sampling, sample preparation and testing*

ISO 13909-8, *Hard coal and coke — Mechanical sampling — Part 8: Methods of testing for bias*

3 Terms and definitions

For the purposes of this document, the terms and definitions given in ISO 13909-1 apply.

4 Precision of sample preparation

From the equations given in ISO 13909-7, the estimated absolute value of the precision of the result obtained for the lot at the 95 % confidence level, P_L, for sampling is given by Formula (1):

$$P_L = 2\sqrt{\frac{\frac{V_I}{n} + V_{PT}}{m}} \tag{1}$$

where

© ISO 2016 – All rights reserved

Documents
Document Sharing Hub

Full document details: BS ISO 13909-4:2016

P_L is the estimated overall precision of sampling, sample preparation and testing for the lot at a 95 % confidence level, expressed as a percentage absolute;

V_I is the primary increment variance;

V_{PT} is the preparation and testing variance for both off-line and on-line systems;

n is the number of increments to be taken from a sub-lot;

m is the number of sub-lots in the lot.

The procedures given in this part of ISO 13909 are designed to achieve levels of V_{PT} of 0,2 or less for both ash and moisture tests. Better levels are expected when using mechanical dividers.

For some preparation schemes, however, practical restrictions may prevent the preparation and testing variance being as low as this. Under these circumstances, the user should decide whether to achieve the desired overall precision by improving the preparation scheme or by dividing the lot into a greater number of sub-lots.

The errors occurring in the various stages of preparation and analysis, expressed in terms of variance, may be checked by the method given in ISO 13909-7.

5 Constitution of a sample

5.1 Introduction

Primary increments shall be taken in accordance with the procedures specified in ISO 13909-2 and ISO 13909-3.

Individual increments are usually combined to form a sample. A single sample may be constituted by combination of increments taken from a complete sub-lot or by combining increments taken from individual parts of a sub-lot. Under some circumstances, e.g. size analysis or bias testing, the sample consists of a single increment which is prepared and tested. Examples of the constitution of samples are shown in Figure 1.

The procedures for increment combination (5.2) may vary according to whether the primary increments were taken using a time-basis (5.2.1) or a mass-basis (5.2.2) sampling scheme.

Samples may also be prepared by the combination of other samples (see 5.3).

5.2 Combination of increments

5.2.1 Time-basis sampling

The mass of the primary increments shall be proportional to the flow rate at the time of sampling. The primary increments may be combined into a sample either directly as taken or after having been prepared individually to an appropriate stage by fixed-ratio division (see Clause 6).

5.2.2 Mass-basis sampling

If the primary increments are of almost uniform mass (see note), they may be combined into a sample, either directly as taken or after having been prepared individually to an appropriate stage by fixed-ratio division (see Clause 6).

NOTE Almost uniform mass has been achieved if the coefficient of variation of the increment masses is less than 20 % and there is no significant correlation between the flow rate at the time of taking the increment and the mass of the increment (see ISO 13909-2:2016, Annex A).

© ISO 2016 – All rights reserved
Documents
Document Sharing Hub
Full document details: BS ISO 13909-4:2016

If the primary increments are not of almost uniform mass, they may only be combined into samples after having been divided individually by fixed-mass division (see Clause 6).

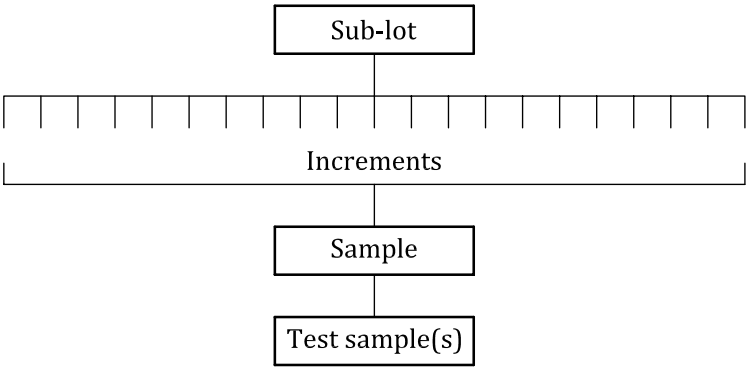

a) Example 1

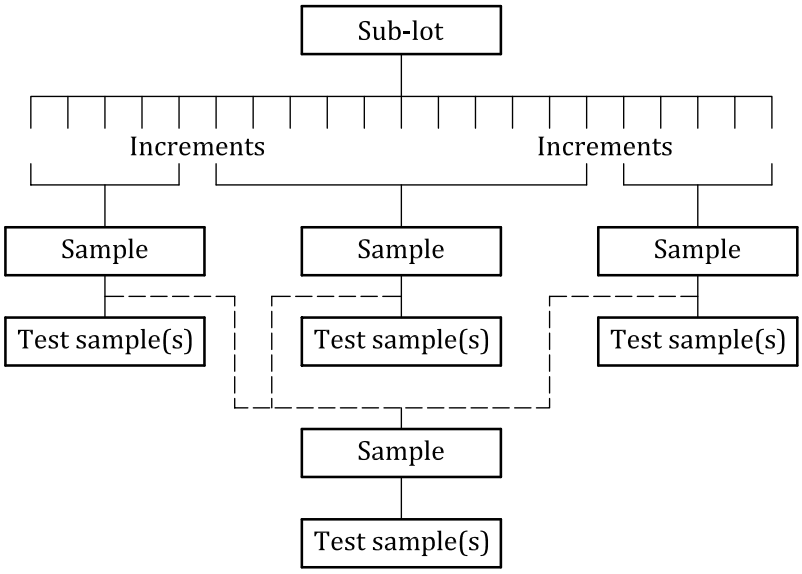

b) Example 2

Figure 1 — Examples of the constitution of samples

5.3 Combination of samples

When combining samples, the mass of the individual samples shall be directly proportional to the mass of the coal from which they were taken in order to obtain a weighted mean of the quality characteristic for the sub-lot. Prior to combination, division shall be by fixed-ratio division (see Clause 6).

6 Division

6.1 General

Division can be

— on-line mechanically, or

— off-line mechanically or manually.

Whenever possible, mechanical methods are preferred to manual methods to minimize human error. Examples of dividers are shown in Figure 2.

© ISO 2016 – All rights reserved

Documents
Document Sharing Hub
Full document details: BS ISO 13909-4:2016

Mechanical dividers are designed to extract one or more parts of the coal in a number of cuts of relatively small mass. When the smallest mass of the divided sample that can be obtained in one pass through the divider is greater than that required further passes through the same divider or subsequent passes through further dividers may be necessary.

If coal does not run freely through a sample divider it may be necessary to air-dry the sample as described in Clause 10 before sample division is undertaken.

Manual division is normally applied when mechanical methods would result in loss of integrity, e.g. loss of moisture or size degradation. Manual methods may themselves result in bias, particularly if the mass of coal to be divided is large.

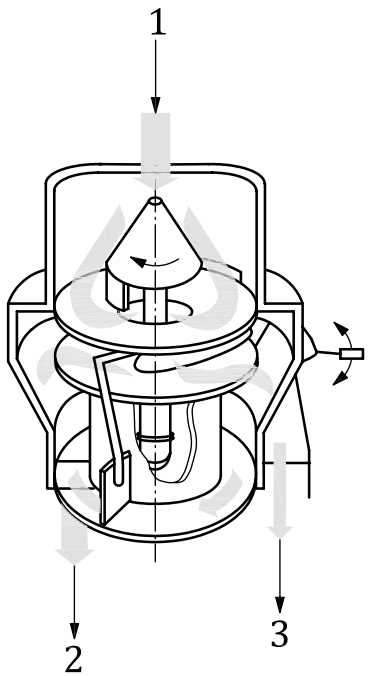

a) Rotating disc type

Key

1 feed
2 reject
3 divided sample

The material from a mixing container is fed by scrapers to the centre of the dividing disc. From there it is discharged over the range of the disc through special clearing arms. The sample falls through adjustable slots into chutes; the reject is carried away through a cleaning conduit. The whole interior space is cleaned by scrapers.

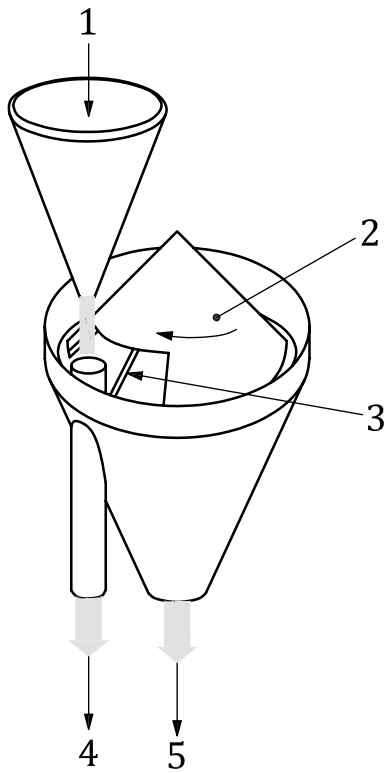

b) Rotating cone type

Key

1 feed
2 rotating cone
3 adjustable slot
4 divided sample
5 reject

A stream of coal is allowed to fall onto a rotating cone; the adjustable slot with lips in the cone allows the stream to fall directly onto the sample receiver for part of each revolution.

Figure 2 — Examples of dividers

© ISO 2016 – All rights reserved
Documents
Document Sharing Hub
Full document details: BS ISO 13909-4:2016

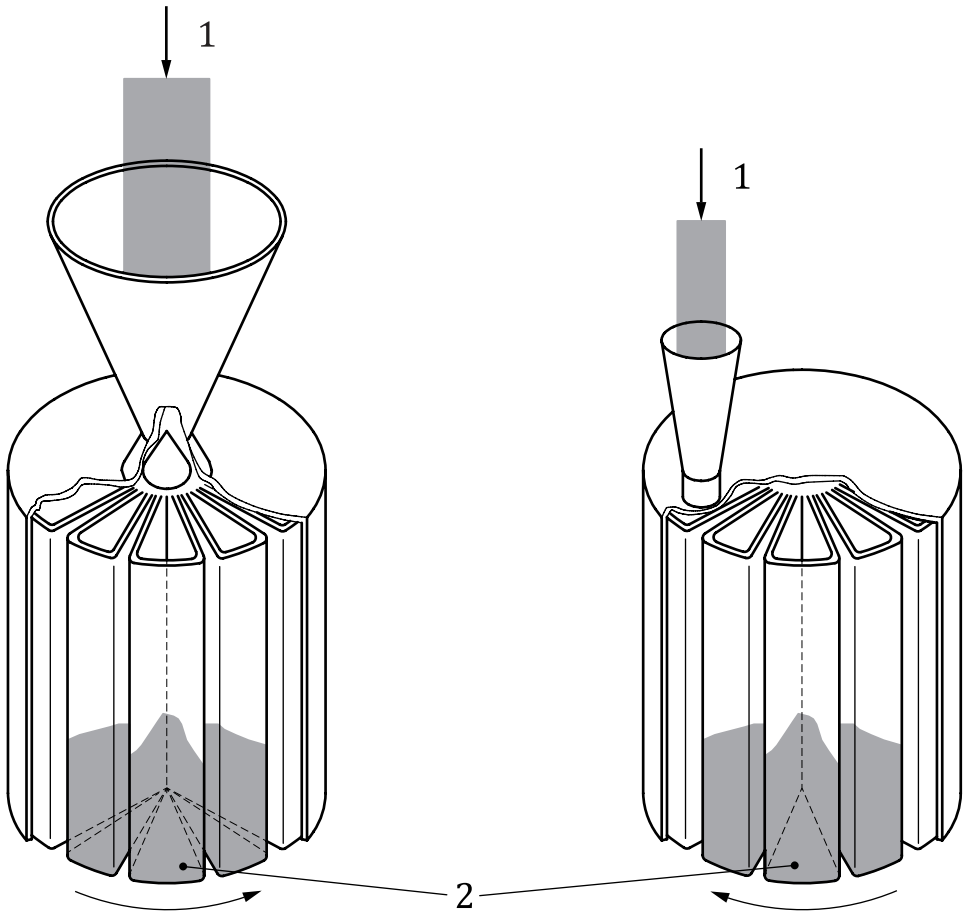

c) Container type

Key

1 feed

2 divided sample in rotating receivers

The coal stream flows to the hopper and this flow is intercepted by the top edge of a number of sector-shaped containers dividing the flow into equal parts. Either the hopper or the containers may rotate. The machine can be controlled for the following operations:

1) for dividing;
2) for collecting duplicates;
3) for collecting replicates.

Figure 2 — Examples of dividers *(continued)*

© ISO 2016 – All rights reserved

Documents
Document Sharing Hub
Full document details: BS ISO 13909-4:2016