BS ISO 13909-4:2025

BSI Standards Publication

Coal and coke — Mechanical sampling

Part 4: Preparation of test samples of coal

Documents
Document Sharing Hub

Full document details: BS ISO 13909-4:2025

National foreword

This British Standard is the UK implementation of ISO 13909-4:2025. It supersedes BS ISO 13909-4:2016, which is withdrawn.

The UK participation in its preparation was entrusted to Technical Committee W/-, Miscellaneous Standards.

A list of organizations represented on this committee can be obtained on request to its committee manager.

Contractual and legal considerations

This publication has been prepared in good faith, however no representation, warranty, assurance or undertaking (express or implied) is or will be made, and no responsibility or liability is or will be accepted by BSI in relation to the adequacy, accuracy, completeness or reasonableness of this publication. All and any such responsibility and liability is expressly disclaimed to the full extent permitted by the law.

This publication is provided as is, and is to be used at the recipient's own risk.

The recipient is advised to consider seeking professional guidance with respect to its use of this publication.

This publication is not intended to constitute a contract. Users are responsible for its correct application.

© The British Standards Institution 2025
Published by BSI Standards Limited 2025

ISBN 978 0 539 27161 4

ICS 73.040; 75.160.10

Compliance with a British Standard cannot confer immunity from legal obligations.

This British Standard was published under the authority of the Standards Policy and Strategy Committee on 31 July 2025.

Amendments/corrigenda issued since publication

Date	Text affected

Documents
Document Sharing Hub

Full document details: BS ISO 13909-4:2025

International Standard

ISO 13909-4

Third edition
2025-07

Coal and coke — Mechanical sampling —

Part 4: Preparation of test samples of coal

Charbon et coke — Échantillonnage mécanique —

Partie 4: Préparation des échantillons de charbon pour essai

Reference number
ISO 13909-4:2025(en)

© ISO 2025

Documents
Document Sharing Hub

Full document details: BS ISO 13909-4:2025

COPYRIGHT PROTECTED DOCUMENT

© ISO 2025

All rights reserved. Unless otherwise specified, or required in the context of its implementation, no part of this publication may be reproduced or utilized otherwise in any form or by any means, electronic or mechanical, including photocopying, or posting on the internet or an intranet, without prior written permission. Permission can be requested from either ISO at the address below or ISO's member body in the country of the requester.

ISO copyright office
CP 401 • Ch. de Blandonnet 8
CH-1214 Vernier, Geneva
Phone: +41 22 749 01 11
Email: copyright@iso.org
Website: www.iso.org

Published in Switzerland

Documents
Document Sharing Hub
Full document details: BS ISO 13909-4:2025

Contents

Page

Foreword ... **v**
Introduction ... **vi**
1 Scope ... **1**
2 Normative references ... **1**
3 Terms and definitions ... **1**
4 Precision of sample preparation ... **2**
5 Constitution of a sample ... **2**
5.1 General ... 2
5.2 Combination of increments ... 2
5.2.1 Time-basis sampling ... 2
5.2.2 Mass-basis sampling ... 3
5.3 Combination of samples ... 3
6 Division ... **4**
6.1 General ... 4
6.2 Mechanical methods ... 13
6.2.1 General ... 13
6.2.2 Mass of cut ... 13
6.2.3 Interval between cuts ... 14
6.2.4 Division of individual increments ... 14
6.2.5 Division of samples ... 16
6.3 Manual methods ... 17
6.3.1 Riffle method ... 17
6.3.2 Flattened-heap method ... 18
6.3.3 Strip-mixing and splitting method ... 20
7 Reduction ... **21**
7.1 General ... 21
7.2 Reduction mills ... 21
8 Mixing ... **21**
9 Air-drying ... **21**
10 Preparation of samples for specific tests ... **22**
10.1 Types of test samples ... 22
10.2 Preparation of samples for determination of total moisture only ... 22
10.2.1 General ... 22
10.2.2 Storage ... 24
10.2.3 Sample reduction ... 24
10.2.4 Sample division ... 24
10.3 Preparation of samples for general analysis only ... 24
10.3.1 General ... 24
10.3.2 Air-drying ... 24
10.3.3 Reduction and division ... 24
10.4 Common samples ... 26
10.4.1 General ... 26
10.4.2 Extraction of moisture sample by mechanical division ... 27
10.4.3 Extraction of moisture sample by manual method ... 27
10.5 Preparation of size-analysis sample ... 28
10.6 Preparation of samples for other tests ... 30
11 Reserve sample ... **30**
12 Design of equipment for preparation ... **30**
12.1 Dividers ... 30
12.2 Design of cutters for falling-stream dividers ... 30

© ISO 2025 – All rights reserved

Documents
Document Sharing Hub
Full document details: BS ISO 13909-4:2025

12.2.1 General ... 30
12.2.2 Cutter velocity ... 31
12.3 Preparation systems ... 31
12.3.1 General ... 31
12.3.2 Design criteria ... 31
12.3.3 Abnormal operation ... 32
12.4 Provision for checking for precision ... 32
12.5 Provision for testing for bias ... 32

Bibliography ... **33**

© ISO 2025 – All rights reserved

Documents
Document Sharing Hub
Full document details: BS ISO 13909-4:2025

Foreword

ISO (the International Organization for Standardization) is a worldwide federation of national standards bodies (ISO member bodies). The work of preparing International Standards is normally carried out through ISO technical committees. Each member body interested in a subject for which a technical committee has been established has the right to be represented on that committee. International organizations, governmental and non-governmental, in liaison with ISO, also take part in the work. ISO collaborates closely with the International Electrotechnical Commission (IEC) on all matters of electrotechnical standardization.

The procedures used to develop this document and those intended for its further maintenance are described in the ISO/IEC Directives, Part 1. In particular, the different approval criteria needed for the different types of ISO documents should be noted. This document was drafted in accordance with the editorial rules of the ISO/IEC Directives, Part 2 (see www.iso.org/directives).

ISO draws attention to the possibility that the implementation of this document may involve the use of (a) patent(s). ISO takes no position concerning the evidence, validity or applicability of any claimed patent rights in respect thereof. As of the date of publication of this document, ISO had not received notice of (a) patent(s) which may be required to implement this document. However, implementers are cautioned that this may not represent the latest information, which may be obtained from the patent database available at www.iso.org/patents. ISO shall not be held responsible for identifying any or all such patent rights.

Any trade name used in this document is information given for the convenience of users and does not constitute an endorsement.

For an explanation of the voluntary nature of standards, the meaning of ISO specific terms and expressions related to conformity assessment, as well as information about ISO's adherence to the World Trade Organization (WTO) principles in the Technical Barriers to Trade (TBT), see www.iso.org/iso/foreword.html.

This document was prepared by Technical Committee ISO/TC 27, *Coal and coke*, Subcommittee SC 4, *Sampling*.

This third edition cancels and replaces the second edition (ISO 13909-4:2016), which has been technically revised.

The main changes are as follows:

— the title has been modified and aligned with the rest of the ISO 13909 series;

— the scope has been revised to specifically refer to coal;

— the references have been updated;

— the legend for Formula (3) has been updated.

A list of all parts in the ISO 13909 series can be found on the ISO website.

Any feedback or questions on this document should be directed to the user's national standards body. A complete listing of these bodies can be found at www.iso.org/members.html.

© ISO 2025 – All rights reserved

Documents
Document Sharing Hub
Full document details: BS ISO 13909-4:2025

Introduction

The objective of sample preparation is to prepare one or more test samples from the primary increments for subsequent analysis. The requisite mass and particle size of the test sample depend on the test to be carried out.

The process of sample preparation may involve constitution of samples, reduction, division, mixing and drying, or all or a combination of these.

Primary increments may be prepared individually as test samples or combined to constitute samples either as taken or after having been prepared by reduction or division, or both. Samples can either be prepared individually as test samples or combined on a weighted basis to constitute a further sample.

When difficulty in handling the coal or coals being sampled is expected at a particular stage in sample preparation, or if there is a likelihood of losing moisture by evaporation, it is necessary to withdraw the sample or increment from the on-line system at the stage immediately prior to the point of difficulty and proceed off-line.

© ISO 2025 – All rights reserved

Documents
Document Sharing Hub
Full document details: BS ISO 13909-4:2025

Coal and coke — Mechanical sampling —

Part 4:
Preparation of test samples of coal

1 Scope

This document describes the preparation of samples of coal from the combination of primary increments to the preparation of samples for specific tests.

2 Normative references

The following documents, in whole or in part, are normatively referenced in this document and are indispensable for its application. For dated references, only the edition cited applies. For undated references, the latest edition of the referenced document (including any amendments) applies.

ISO 589, *Hard coal — Determination of total moisture*

ISO 3310-1, *Test sieves — Technical requirements and testing — Part 1: Test sieves of metal wire cloth*

ISO 13909-1, *Coal and coke — Mechanical sampling — Part 1: General introduction*

ISO 13909-2:2025, *Coal and coke — Mechanical sampling — Part 2: Sampling of coal from moving streams*

ISO 13909-3, *Coal and coke — Mechanical sampling — Part 3: Sampling of coal from stationary lots*

ISO 13909-7, *Coal and coke — Mechanical sampling — Part 7: Methods for determining the precision of sampling, sample preparation and testing*

ISO 13909-8, *Coal and coke — Mechanical sampling — Part 8: Methods of testing for bias*

3 Terms and definitions

For the purposes of this document, the terms and definitions given in ISO 13909-1 apply.

ISO and IEC maintain terminology databases for use in standardization at the following addresses:

— ISO Online browsing platform: available at https://www.iso.org/obp

— IEC Electropedia: available at https://www.electropedia.org/

© ISO 2025 – All rights reserved

Documents
Document Sharing Hub
Full document details: BS ISO 13909-4:2025

4 Precision of sample preparation

From the formulae given in ISO 13909-7, the estimated absolute value of the precision of the result obtained for the lot at the 95 % confidence level, P_L, for sampling is given by Formula (1):

$$P_L = 2\sqrt{\frac{\frac{V_I}{n} + V_{PT}}{m}} \quad (1)$$

where

P_L is the estimated overall precision of sampling, sample preparation and testing for the lot at a 95 % confidence level, expressed as a percentage absolute;

V_I is the primary increment variance;

V_{PT} is the preparation and testing variance for both off-line and on-line systems;

n is the number of increments to be taken from a sub-lot;

m is the number of sub-lots in the lot.

The procedures given in this document are designed to achieve levels of V_{PT} of 0,2 or less for both ash and moisture tests. Better levels are expected when using mechanical dividers.

For some preparation schemes, however, practical restrictions can prevent the preparation and testing variance being as low as this. Under these circumstances, the user should decide whether to achieve the desired overall precision by improving the preparation scheme or by dividing the lot into a greater number of sub-lots.

The errors occurring in the various stages of preparation and analysis, expressed in terms of variance, may be checked by the method given in ISO 13909-7.

5 Constitution of a sample

5.1 General

Primary increments shall be taken in accordance with the procedures specified in ISO 13909-2 and ISO 13909-3.

Individual increments are usually combined to form a sample. A single sample may be constituted by combination of increments taken from a complete sub-lot or by combining increments taken from individual parts of a sub-lot. Under some circumstances, e.g. size analysis or bias testing, the sample consists of a single increment which is prepared and tested. Examples of the constitution of samples are shown in Figure 1.

The procedures for increment combination (see 5.2) may vary according to whether the primary increments were taken using a time-basis (see 5.2.1) or a mass-basis (see 5.2.2) sampling scheme.

Samples may also be prepared by the combination of other samples (see 5.3).

5.2 Combination of increments

5.2.1 Time-basis sampling

The mass of the primary increments shall be proportional to the flow rate at the time of sampling. The primary increments may be combined into a sample either directly as taken or after having been prepared individually to an appropriate stage by fixed-ratio division (see Clause 6).

© ISO 2025 – All rights reserved

Documents
Document Sharing Hub
Full document details: BS ISO 13909-4:2025

5.2.2 Mass-basis sampling

If the primary increments are of almost uniform mass (see note), they may be combined into a sample, either directly as taken or after having been prepared individually to an appropriate stage by fixed-ratio division (see Clause 6).

NOTE Almost uniform mass has been achieved if the coefficient of variation of the increment masses is less than 20 % and there is no significant correlation between the flow rate at the time of taking the increment and the mass of the increment (see ISO 13909-2:2025, Annex A).

If the primary increments are not of almost uniform mass, they may only be combined into samples after having been divided individually by fixed-mass division (see Clause 6).

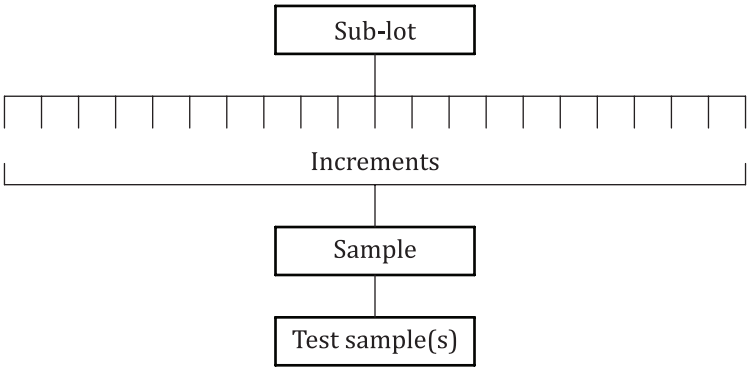

a) Example 1

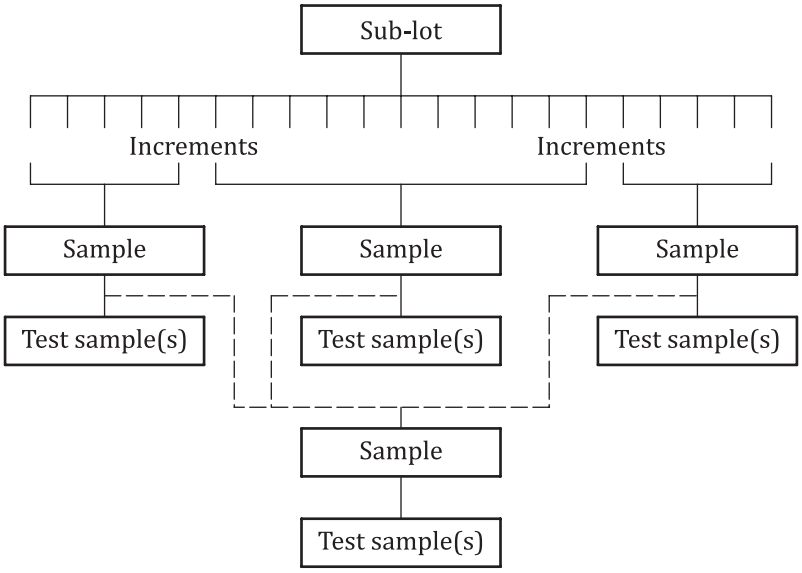

b) Example 2

Figure 1 — Examples of the constitution of samples

5.3 Combination of samples

When combining samples, the mass of the individual samples shall be directly proportional to the mass of the coal from which they were taken in order to obtain a weighted mean of the quality characteristic for the sub-lot. Prior to combination, division shall be by fixed-ratio division (see Clause 6).

© ISO 2025 – All rights reserved

Documents
Document Sharing Hub
Full document details: BS ISO 13909-4:2025

6 Division

6.1 General

Division can be:

— on-line mechanically; or

— off-line mechanically or manually.

Whenever possible, mechanical methods are preferred to manual methods to minimize human error. Examples of dividers are in Figures 2 to 10.

Mechanical dividers are designed to extract one or more parts of the coal in a number of cuts of relatively small mass. When the smallest mass of the divided sample that can be obtained in one pass through the divider is greater than that required further passes through the same divider or subsequent passes through further dividers may be necessary.

If coal does not run freely through a sample divider it may be necessary to air-dry the sample as described in Clause 10 before sample division is undertaken.

Manual division is normally applied when mechanical methods would result in loss of integrity, e.g. loss of moisture or size degradation. Manual methods may themselves result in bias, particularly if the mass of coal to be divided is large.

In the rotating disc type of mechanical divider in Figure 2, the material from a mixing container is fed by scrapers to the centre of the dividing disc. From there it is discharged over the range of the disc through special clearing arms. The sample falls through adjustable slots into chutes; the reject is carried away through a cleaning conduit. The whole interior space is cleaned by scrapers.

For the rotating cone type of divider in Figure 3, a stream of coal is allowed to fall onto a rotating cone, the adjustable slot with lips in the cone allows the stream to fall directly onto the sample receiver for part of each revolution.

In the container type dividers in Figure 4, the coal stream flows to the hopper and this flow is intercepted by the top edge of a number of sector-shaped containers dividing the flow into equal parts. Either the hopper or the containers may rotate. The machine can be controlled for the following operations:

1) for dividing;

2) for collecting duplicates:

3) for collecting replicates.

For the chain bucket type divider in Figure 5, a chain mechanism as shown is equipped with buckets spread at equal pitch. The buckets travel in a single direction or change direction at preset time periods. The bucket intercepts the free-falling coal stream to extract cuts which discharge to sample as the bucket inverts.

The slotted-belt type divider in Figure 6 comprises an endless belt as shown having slots spaced at equal pitch with lips that act as cutting edges passing below a feed chute. The coal stream is fed to the chute and, as each slot passes through the stream, a cut is taken. The stream which falls onto the plain part of the belt is carried to rejects.

The rotating plate divider in Figure 7 consists of a flat plate with lipped slots spaced at equal pitch rotating beneath a feed chute. Coal is fed into the feed chute, then, falls onto the rotating plate to form a ribbon bed which is carried to the plough and discharged to rejects. As a slot passes through the stream, a cut is taken.

The rotating chute type divider in Figure 8 incorporates a hollow shaft with a rotating conical hopper and chute which distributes the coal to one or more stationary cutters within a housing as shown. Each cutter is designed to take cuts from the coal stream and the rejects are discharged through the hollow shaft.

© ISO 2025 – All rights reserved

Documents
Document Sharing Hub
Full document details: BS ISO 13909-4:2025

The rotating cutter divider in Figure 9 comprises one or more rotating cutters taking cuts from the coal stream as it is fed into the housing through a feed chute as shown. Coal not collected by the rotating cutters is directed to reject at the bottom of the housing.

Finally, the cutter-chute type divider in Figure 10 incorporates a cutter-chute that traverses the full coal stream and diverts a portion from the stream. When the coal stream is not being cut by the chute, it is deflected by the angle plate to reject.

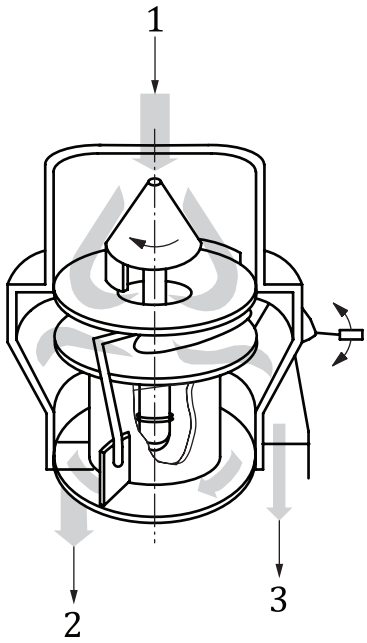

Key

1	feed
2	reject
3	divided sample

Figure 2 — Examples of dividers — Rotating disc type

© ISO 2025 – All rights reserved

Documents
Document Sharing Hub
Full document details: BS ISO 13909-4:2025