BS ISO 13992:2014

BSI Standards Publication

Alpine touring ski-bindings — Requirements and test methods

bsi.

...making excellence a habit.™

Document Sharing Hub

National foreword

This British Standard is the UK implementation of ISO 13992:2014.

The UK participation in its preparation was entrusted to Technical Committee SW/136/7, Snowsports equipment.

A list of organizations represented on this committee can be obtained on request to its secretary.

This publication does not purport to include all the necessary provisions of a contract. Users are responsible for its correct application.

© The British Standards Institution 2014. Published by BSI Standards Limited 2014

ISBN 978 0 580 82106 6

ICS 97.220.20

Compliance with a British Standard cannot confer immunity from legal obligations.

This British Standard was published under the authority of the Standards Policy and Strategy Committee on 31 October 2014.

Amendments issued since publication

Date	Text affected

Documents
Document Sharing Hub

Full document details: BS ISO 13992:2014

INTERNATIONAL STANDARD

ISO 13992

Third edition
2014-10-15

Alpine touring ski-bindings — Requirements and test methods

Fixations pour le ski alpin de randonnée — Exigences et méthodes d'essai

Reference number
ISO 13992:2014(E)

Documents
Document Sharing Hub

© ISO 2014

Full document details: BS ISO 13992:2014

COPYRIGHT PROTECTED DOCUMENT

© ISO 2014

All rights reserved. Unless otherwise specified, no part of this publication may be reproduced or utilized otherwise in any form or by any means, electronic or mechanical, including photocopying, or posting on the internet or an intranet, without prior written permission. Permission can be requested from either ISO at the address below or ISO's member body in the country of the requester.

ISO copyright office
Case postale 56 • CH-1211 Geneva 20
Tel. + 41 22 749 01 11
Fax + 41 22 749 09 47
E-mail copyright@iso.org
Web www.iso.org

Published in Switzerland

© ISO 2014 – All rights reserved

Documents
Document Sharing Hub

Full document details: BS ISO 13992:2014

Contents

Page

Foreword ... **iv**

1 Scope ... **1**

2 Normative references ... **1**

3 Terms and Definitions ... **1**

4 Test conditions ... **4**
4.1 Loading rate ... 4
4.2 Accuracy of measurement ... 4
4.3 Test sole ... 4
4.4 Test ski ... 5

5 Test methods A and B ... **5**
5.1 Principle ... 5
5.2 Simple torsion test ... 6
5.3 Forward bending test ... 7

6 Requirements and testing ... **8**
6.1 General requirements ... 8
6.2 Release tests — Setting, reproducibility, and symmetry of release values ... 9
6.3 Evaluation of reproducibility of release under different influences ... 11
6.4 Energy absorption (recentering) ... 16
6.5 Lateral release under impact loading ... 17
6.6 Field tests ... 17
6.7 Exposure to corrosion and dirt ... 19

7 Marking ... **19**

Annex A (informative) **Additional information to conduct tests according to test method A** ... **21**

Annex B (informative) **Fixtures and load configurations necessary for conducting tests using test method B** ... **26**

Annex C (normative) **Grain size distribution of dirt** ... **33**

Annex D (informative) **Determination of tolerances on M_z and M_y** ... **34**

Bibliography ... **36**

© ISO ISO pub-date year – All rights reserved

Documents
Document Sharing Hub
Full document details: BS ISO 13992:2014

Foreword

ISO (the International Organization for Standardization) is a worldwide federation of national standards bodies (ISO member bodies). The work of preparing International Standards is normally carried out through ISO technical committees. Each member body interested in a subject for which a technical committee has been established has the right to be represented on that committee. International organizations, governmental and non-governmental, in liaison with ISO, also take part in the work. ISO collaborates closely with the International Electrotechnical Commission (IEC) on all matters of electrotechnical standardization.

The procedures used to develop this document and those intended for its further maintenance are described in the ISO/IEC Directives, Part 1. In particular the different approval criteria needed for the different types of ISO documents should be noted. This document was drafted in accordance with the editorial rules of the ISO/IEC Directives, Part 2 (see www.iso.org/directives).

Attention is drawn to the possibility that some of the elements of this document may be the subject of patent rights. ISO shall not be held responsible for identifying any or all such patent rights. Details of any patent rights identified during the development of the document will be in the Introduction and/or on the ISO list of patent declarations received (see www.iso.org/patents).

Any trade name used in this document is information given for the convenience of users and does not constitute an endorsement.

For an explanation on the meaning of ISO specific terms and expressions related to conformity assessment, as well as information about ISO's adherence to the WTO principles in the Technical Barriers to Trade (TBT) see the following URL: Foreword - Supplementary information

The committee responsible for this document is ISO/TC 83, *Sports and recreational equipment*, Subcommittee SC 4, *Ski-bindings*.

This third edition cancels and replaces the second edition (ISO 13992:2006) has been technically revised.

The main changed are:

— addition of 6.6.3.5;

— addition of the reference to ISO 11087 in 6.1.1.4.

© ISO ISO pub-date year – All rights reserved
Documents
Document Sharing Hub
Full document details: BS ISO 13992:2014

INTERNATIONAL STANDARD ISO 13992:2014(E)

Alpine touring ski-bindings — Requirements and test methods

1 Scope

This International Standard specifies the main characteristics of touring ski-bindings and describes, as an example, the test methods A and B.

This International Standard applies, in principle, to touring ski-bindings for alpine skiing for children, juniors, and adults.

NOTE As specific touring boots and bindings for children do not exist in the market at present, the scope of this International Standard is limited for the moment to bindings for juniors and adults.

2 Normative references

The following documents, in whole or in part, are normatively referenced in this document and are indispensable for the application. For dated references, only the edition cited applies. For undated references, the latest edition of the referenced document (including any amendments) applies.

ISO 5355, *Alpine ski-boots — Requirements and test methods*

ISO 8061, *Alpine ski-bindings — Selection of release torque values*

ISO 9465, *Alpine ski-bindings — Lateral release under impact loading — Test method*

ISO 9523, *Touring ski-boots for adults — Interface with touring ski-bindings — Requirements and test methods*

ISO 9838, *Alpine and touring ski-bindings — Test soles for ski-binding tests*

ISO 11087, *Alpine ski-bindings — Retention devices — Requirements and test methods*

3 Terms and Definitions

For the purposes of this document, the following terms and definitions apply.

3.1
alpine touring ski-binding
device fixing the boot to the ski where the heel can be fixed for downhill skiing or allowed to move upwards relative to the ski for advancing on flat ground or uphill; the device releases the boot from the ski when certain loads reach preset values

3.2
downhill position
position where the heel of the boot is fixed to the ski for downhill skiing

3.3
walking position
position where the heel of the boot is allowed to move upwards relative to the ski for walking on flat ground or uphill

3.4
maximum angular displacement
maximum angle between the bottom of the sole and the surface of the ski in the binding area allowed by the binding in the advancing position

© ISO 2014 – All rights reserved

Documents
Document Sharing Hub
Full document details: BS ISO 13992:2014

3.5
combined loading
loading of the sole or ski in several directions at the same time, where one of the loads is the torque, M_z, progressively applied to the sole until the binding releases, see Figure 1 and Table 1

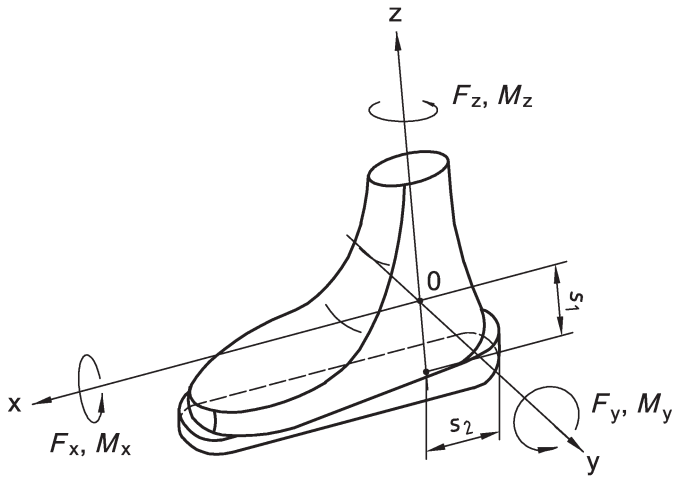

Figure 1 — Definition of the loads and torques

Table 1 — Coordinates of reference point 0

Dimensions in millimetres

	Type of binding		
	C	CA	A
s_1	85	100	100
s_2	70	80	80

Note 1 to entry: Each of the load combinations simulates a given situation, choiced within an infinite field of possibilities and simplified for the purpose of the tests. The main simplification being that the loads applied additionally to the release torque, M_z, are held constant in value and direction during all the release process.

[SOURCE: ISO 9462:2014, 3.5]

3.6
additional loads
loads applied additionally to release torque, M_z

[SOURCE: ISO 9462:2014, 3.6]

3.7
deflection of the ski
deflection of the ski perpendicular to its gliding surface

Note 1 to entry: In the practice, the deflection of the ski depends at the same time on the loading situation and the profile of the snow-surface ("geometrical" situation). In test simplification, only the "geometrical" situation is simulated.

[SOURCE: ISO 9462:2014, 3.7]

3.8
release
detachment of the boot from the ski by release of the mechanism that ensures the connection between boot and ski

Note 1 to entry: This release is only considered effective when all the loads due to the boot/ski connection have dropped to values which present no danger to the skier.

© ISO 2014 – All rights reserved
Documents
Document Sharing Hub
Full document details: BS ISO 13992:2014

[SOURCE: ISO 9462:2014, 3.2]

3.9
release values
maximum values of torques M_z and M_y (see Figure 1), caused at the boot/ski connection by the two movements of torsion and forward bending

Note 1 to entry: These values are generally adjustable on current bindings which have a scale and an indicator displaying the setting level.

Note 2 to entry: In the present state of the art, bindings are designed at least to release in torsion ($\pm M_z$) and in forward bending ($\pm M_y$).

[SOURCE: ISO 9462:2014, 3.3]

3.10
reference value
value, adjusted after a series of tests, used as a basis of comparison to evaluate the behaviour of the binding during the tests (see 6.3.1)

[SOURCE: ISO 9462:2014, 3.4]

3.11
type C bindings
bindings which can be adjusted to at least the following release values:

a) M_z = 10 m

b) M_y = 37 Nm

Note 1 to entry: to entry:At present, type C bindings for ski touring do not exist on the market.

3.12
type CA bindings
bindings generally suitable for boot soles complying with type A of ISO 5355 and with ISO 9523

Note 1 to entry: They may also require specific boot soles designed by the manufacturer. They can be adjusted to at least the following release values:

a) M_z = 20 Nm;

b) M_y = 75 Nm.

3.13
type A bindings
bindings generally suitable for boot soles complying with type A of ISO 5355 and with ISO 9523

Note 1 to entry: They may also require specific boot soles designed by the manufacturer.

3.14
limit
L_1
lowest possible position of the setting indicator

[SOURCE: ISO 9462:2014, 3.11]

3.15
limit
L_2
position of the indicator at the lowest mark on the setting scale

[SOURCE: ISO 9462:2014, 3.12]

© ISO 2014 – All rights reserved

Documents
Document Sharing Hub
Full document details: BS ISO 13992:2014

3.16
limit
L_3
position of the indicator at the highest mark on the setting scale

[SOURCE: ISO 9462:2014, 3.13]

3.17
limit
L_4
highest possible position of the setting indicator

[SOURCE: ISO 9462:2014, 3.14]

4 Test conditions

4.1 Loading rate

The tests shall be performed quasi-statically, ensuring that the following indicative values of the torque gradient comply with the following.

a) Torsion release

The angular velocity of the test shall be for:

— M_Z (Moment in z-axis)

3,8°/s ± 0,1°/s;

— FAV (Moment in y-axis measured with force)

5 mm/s ± 2 mm/s.

b) Forward bending release

The angular velocity of the test shall be for:

— M_y (Moment in y-axis)

3,8°/s ± 0,1°/s;

— FSH [Energy absorption (recentering)]

5 mm/s ± 2 mm/s.

4.2 Accuracy of measurement

The measurement error of the release value in torsion shall be smaller than ±2 % for values above 50 N m inclusive and ±1 Nm for values below 50 Nm.

The measurement error of the release value in forward bending shall be smaller than ±2 % for values above 200 Nm inclusive and ±4 Nm for values below 200 Nm.

The test equipment shall be designed to allow application of pure moments without any extraneous forces during the entire release process.

4.3 Test sole

The test sole shall be in accordance with ISO 9523 and ISO 9838.

© ISO 2014 – All rights reserved
Documents
Document Sharing Hub
Full document details: BS ISO 13992:2014

If a boot-binding system requires a specific boot-sole design, a test sole should be cut from a boot provided by the manufacturer and adapted for test needs.

Before the tests, the sole shall be degreased, washed, and dried.

4.4 Test ski

For the release tests in the laboratory, the bindings shall be mounted either on whole skis or on appropriate sections of skis. If the binding is pre-mounted (already mounted on the ski by the producer), use the ski with which the binding is delivered in its medium size. If not, choose a ski which represents the market.

5 Test methods A and B

5.1 Principle

The binding shall be mounted on a ski in accordance with the manufacturer's instructions. A test sole shall then be inserted in the binding.

In method A (for simple torsion test, see Figure 2 and for forward bending test, see Figure 4), the ski is rigidly connected to the test frame and the torque M_z or M_y is progressively applied to the sole until the binding releases. The peak value of M_z or M_y is recorded.

In method B (for simple torsion test, see Figure 3 and for forward bending test, see Figure 5), the sole is rigidly connected to the test frame through a sensor which measures the torques M_z and M_y. Forces are progressively applied to the ski until the binding releases. The peak value of M_z or M_y is recorded.

Annexes A and B give examples of how to realize method A or method B.

Passing by either method shall be deemed satisfactory.

© ISO 2014 – All rights reserved

Documents
Document Sharing Hub
Full document details: BS ISO 13992:2014

5.2 Simple torsion test

For method A, see Figure 2.

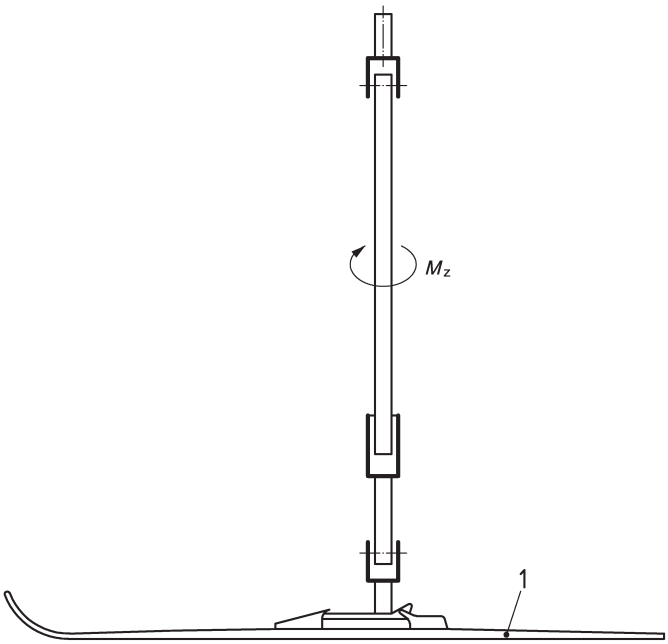

Key

1 fixed ski

Figure 2 — Application of M_z torque and measurement of $M_{z,\,max}$

For method B, see Figure 3.

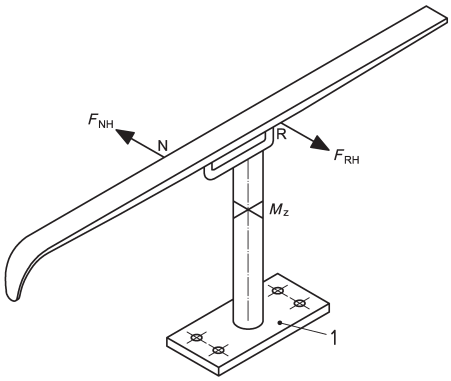

Key

1 fixed base

Figure 3 — Application of two equal forces F_{NH} and F_{RH} and measurement of $M_{z,\,max}$ torque

© ISO 2014 – All rights reserved
Documents
Document Sharing Hub
Full document details: BS ISO 13992:2014

5.3 Forward bending test

For method A, see Figure 4.

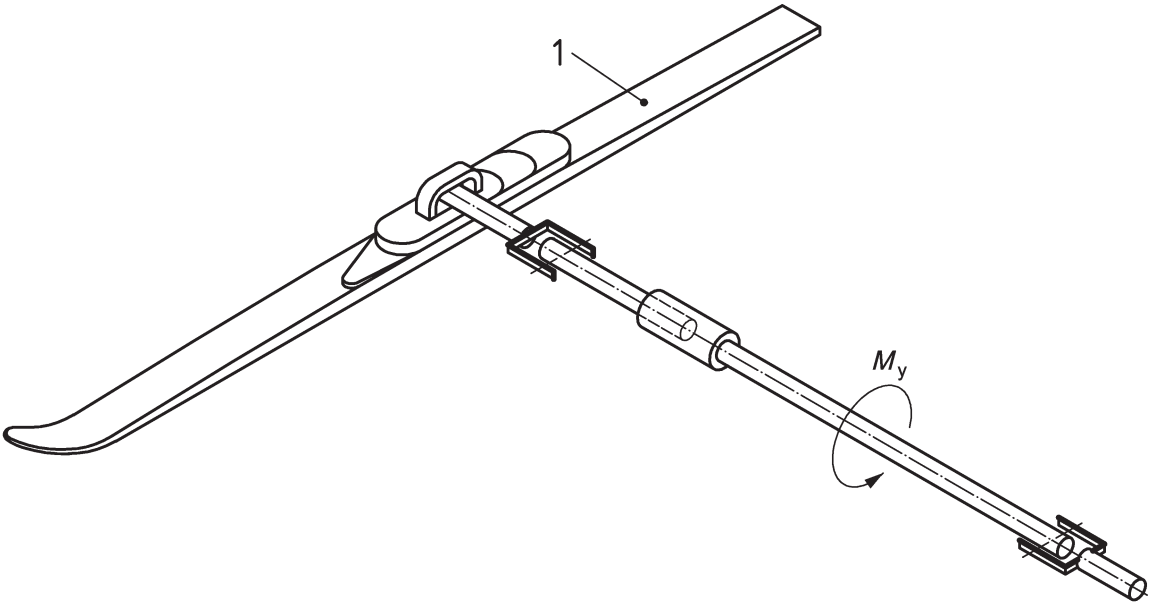

Key

1 fixed ski

Figure 4 — Application of M_y torque and measurement of $M_{y,\,max}$

For method B, see Figure 5.

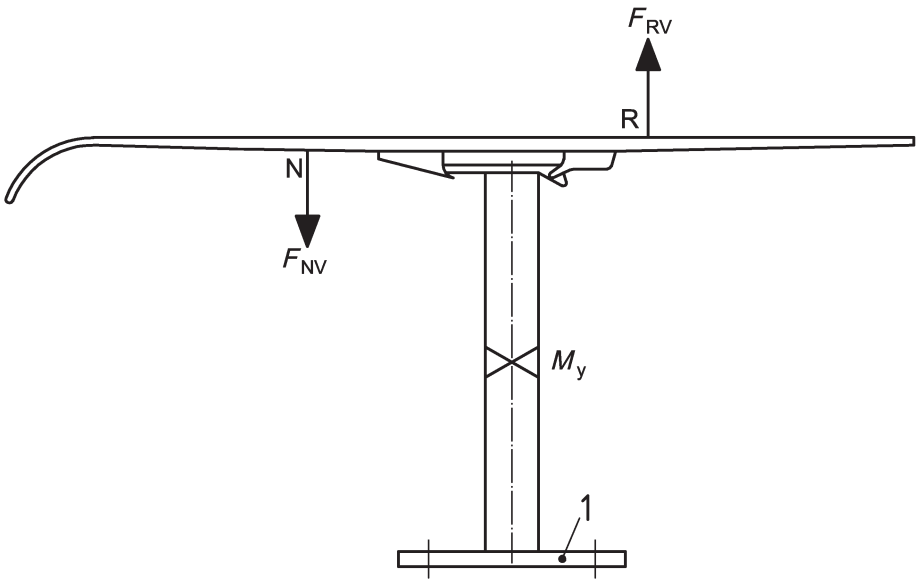

Key

1 fixed base

Figure 5 — Application of two equal forces F_{NV} and F_{RV} and measurement of $M_{y,\,max}$

© ISO 2014 – All rights reserved

Documents
Document Sharing Hub
Full document details: BS ISO 13992:2014

6 Requirements and testing

6.1 General requirements

NOTE This subclause deals with general requirements covering topics where the evaluation is carried out visually.

6.1.1 Function and form

6.1.1.1 In the downhill position, the binding shall release at least in two cases:

— when applying a torque M_z about an axis perpendicular to the ski gliding surface;

— when applying a torque M_y about an axis parallel to the ski surface and perpendicular to the longitudinal axis of the ski.

The binding is said to release when the mentioned torque reaches a maximum value (release value) and then drops to a value that is harmless for the skier. After release, all the loads applied by the ski and the boot on the leg shall remain under the dangerous level for all possible movements, and until all the risks associated with the coupling boot-ski have disappeared.

In the advancing position, the binding shall release in the same cases as before if its maximum angular displacement is less than 45°. For bindings allowing a greater angular displacement, the requirement for release is optional.

6.1.1.2 The release level shall be clearly indicated by a scale covering all of the setting range anticipated by the manufacturer. The release shall still be possible at the upper limit (maximum setting). Settings above $Z = 10$ shall be clearly differentiated from settings below $Z = 10$ on the indicator scale.

6.1.1.3 Each procedure of adjustment to the boot having an influence on the binding functioning shall be verifiable by the use of a clear indicator, or by any other means considered suitable by the operator for showing the correct adjustment.

6.1.1.4 The binding shall be equipped with a ski-brake or allow for an easy and secure attachment of a leash. The ski-brake and the attachment for the leash shall be according to ISO 11087.

6.1.1.5 The design of the ski-brake or the leash shall be such that, after release, no unnecessary danger will occur to the skier.

6.1.1.6 The binding shall have an external design which does not have a negative influence on skiing or cause unnecessary risk of injuries when used normally.

6.1.2 Handling

6.1.2.1 Mounting instructions

The manufacturer or the importer shall deliver mounting instructions that are easily understood to the sports shop. These instructions shall include at least

a) the mechanical procedure for adjusting the release values of the binding,

b) recommendations for determining the appropriate release values for the skier,

c) the sole characteristics required for good functioning of the binding,

d) the boot-sole requirements and preparation for mounting of additional elements if necessary,

e) preparation and mounting of the binding, e.g. use of jig, compatibility with ski, etc.,

© ISO 2014 – All rights reserved
Documents
Document Sharing Hub
Full document details: BS ISO 13992:2014