BS ISO 14117:2019

BSI Standards Publication

Active implantable medical devices — Electromagnetic compatibility — EMC test protocols for implantable cardiac pacemakers, implantable cardioverter defibrillators and cardiac resynchronization devices

Documents
Document Sharing Hub

Full document details: BS ISO 14117:2019

National foreword

This British Standard is the UK implementation of ISO 14117:2019. It supersedes BS ISO 14117:2012, which is withdrawn.

The UK participation in its preparation was entrusted to Technical Committee CH/150/2, Cardiovascular implants.

A list of organizations represented on this committee can be obtained on request to its secretary.

This publication does not purport to include all the necessary provisions of a contract. Users are responsible for its correct application.

© The British Standards Institution 2019
Published by BSI Standards Limited 2019

ISBN 978 0 580 99091 5

ICS 11.040.40; 33.100.01

Compliance with a British Standard cannot confer immunity from legal obligations.

This British Standard was published under the authority of the Standards Policy and Strategy Committee on 30 September 2019.

Amendments/corrigenda issued since publication

Date	Text affected

Documents
Document Sharing Hub

Full document details: BS ISO 14117:2019

INTERNATIONAL STANDARD

ISO 14117

Second edition
2019-09

Active implantable medical devices — Electromagnetic compatibility — EMC test protocols for implantable cardiac pacemakers, implantable cardioverter defibrillators and cardiac resynchronization devices

Dispositifs médicaux implantables actifs — Compatibilité électromagnétique — Protocoles d'essai EMC pour pacemakers cardiaques implantables, défibrillateurs implantables et dispositifs de resynchronisation cardiaque

Reference number
ISO 14117:2019(E)

Documents
Document Sharing Hub

© ISO 2019

Full document details: BS ISO 14117:2019

COPYRIGHT PROTECTED DOCUMENT

© ISO 2019

All rights reserved. Unless otherwise specified, or required in the context of its implementation, no part of this publication may be reproduced or utilized otherwise in any form or by any means, electronic or mechanical, including photocopying, or posting on the internet or an intranet, without prior written permission. Permission can be requested from either ISO at the address below or ISO's member body in the country of the requester.

ISO copyright office
CP 401 • Ch. de Blandonnet 8
CH-1214 Vernier, Geneva
Phone: +41 22 749 01 11
Fax: +41 22 749 09 47
Email: copyright@iso.org
Website: www.iso.org

Published in Switzerland

© ISO 2019 – All rights reserved

Documents
Document Sharing Hub

Full document details: BS ISO 14117:2019

Contents

Page

Foreword ... **v**

Introduction ... **vi**

1 Scope ... **1**

2 Normative references ... **1**

3 Terms, definitions, symbols and abbreviated terms ... **1**
3.1 Terms and definitions ... 1
3.2 Acronyms and abbreviations ... 3

4 Test requirements for the frequency band 0 Hz ≤ *f* ≤ 3 000 MHz ... **4**
4.1 General requirements for all devices ... 4
4.2 Induced lead current ... 5
4.2.1 General requirements ... 5
4.2.2 ***Pacemakers*** and ***CRT-P*** devices ... 5
4.2.3 ***ICD***s and ***CRT-D*** devices ... 9
4.3 Protection from persisting malfunction attributable to ambient electromagnetic fields ... 12
4.3.1 General requirements ... 12
4.3.2 ***Pacemaker*** and ***CRT-P*** devices ... 12
4.3.3 ***ICD***s and ***CRT-D*** devices ... 17
4.4 Protection from malfunction caused by temporary exposure to CW sources ... 23
4.4.1 ***Pacemaker*** and ***CRT-P*** device' response to temporary continuous wave sources in the frequency range 16,6 Hz to 167 kHz ... 23
4.4.2 ***ICD***s and ***CRT-D*** devices ... 25
4.5 Protection from sensing EMI as cardiac signals ... 26
4.5.1 General requirements ... 26
4.5.2 Protection from sensing EMI as cardiac signals in the frequency range of 16,6 Hz to 150 kHz ... 27
4.5.3 Protection from sensing EMI as cardiac signals in the frequency range of 150 kHz to 10 MHz ... 30
4.5.4 Protection from sensing EMI as cardiac signals in the frequency range of 10 MHz to 385 MHz ... 33
4.6 Protection from static magnetic fields of flux density up to 1 mT ... 35
4.6.1 General requirements ... 35
4.6.2 ***Pacemakers*** and ***CRT-P*** devices ... 35
4.6.3 ***ICD***s and ***CRT-D*** devices ... 36
4.7 Protection from static magnetic fields of flux density up to 50 mT ... 37
4.7.1 General requirements ... 37
4.7.2 ***Pacemakers*** and ***CRT-P*** devices ... 37
4.7.3 ***ICD***s and ***CRT-D*** devices ... 37
4.8 Protection from AC magnetic field exposure in the range of 1 kHz to 140 kHz ... 37
4.8.1 General requirements ... 37
4.8.2 ***Pacemakers*** and ***CRT-P*** devices ... 37
4.8.3 ***ICD***s and ***CRT-D*** devices ... 38
4.9 Test requirements for the frequency range of 385 MHz ≤ *f* ≤ 3 000 MHz ... 38
4.9.1 General requirements ... 38
4.9.2 Test setup ... 39
4.9.3 Test procedure ... 40
4.9.4 Performance criteria ... 42
4.10 Transient exposure to stationary low-frequency electromagnetic field sources in the frequency range 16,6 Hz to 167 kHz ... 43

5 Testing above frequency of 3 000 MHz ... **43**

6 Protection of devices from EM fields encountered in a therapeutic environment ... **43**
6.1 Protection of the device from damage caused by high-frequency surgical exposure ... 43
6.1.1 General requirements ... 43

AVA Documents
Document Sharing Hub

© ISO 2019 – All rights reserved

Full document details: BS ISO 14117:2019

6.1.2 ***Pacemakers*** and ***CRT-P*** devices ... 44
6.1.3 ***ICD***s and ***CRT-D*** devices ... 44
6.2 Protection of the device from damage caused by external defibrillators ... 45
6.2.1 General requirements ... 45
6.2.2 ***Pacemakers*** and ***CRT-P*** devices ... 45
6.2.3 ***ICD***s and ***CRT-D*** devices ... 48

7 Additional accompanying documentation ... 49
7.1 Disclosure of permanently programmable sensitivity settings ... 49
7.2 Descriptions of reversion modes ... 49
7.3 Known potential hazardous behaviour ... 49
7.4 Minimum separation distance from hand-held transmitters ... 49

Annex A (informative) **Rationale ... 50**

Annex B (informative) **Rationale for test frequency ranges ... 63**

Annex C (informative) **Code for describing modes of implantable generators ... 64**

Annex D (normative) **Interface circuits ... 66**

Annex E (informative) **Selection of capacitor C_x ... 71**

Annex F (normative) **Calibration of the injection network (Figure D.5) ... 74**

Annex G (normative) **Torso simulator ... 76**

Annex H (normative) **Dipole antennas ... 80**

Annex I (normative) ***Pacemaker/ICD*** **programming settings ... 82**

Annex J (normative) **Simulated cardiac signal ... 84**

Annex K (normative) **Calculation of net power into dipole antenna ... 85**

Annex L (informative) **Loop area calculations ... 90**

Annex M (informative) **Correlation between levels of test voltages used in this document and strengths of radiated fields ... 96**

Annex N (informative) **Connections to DUTs having ports with more than two electrode connections ... 104**

Annex O (informative) **Example method for evaluation of transient and permanent malfunction of a CIED due to temporary exposure to low frequency (<167 kHz) electromagnetic fields ... 127**

Bibliography ... 132

© ISO 2019 – All rights reserved
Documents
Document Sharing Hub
Full document details: BS ISO 14117:2019

Foreword

ISO (the International Organization for Standardization) is a worldwide federation of national standards bodies (ISO member bodies). The work of preparing International Standards is normally carried out through ISO technical committees. Each member body interested in a subject for which a technical committee has been established has the right to be represented on that committee. International organizations, governmental and non-governmental, in liaison with ISO, also take part in the work. ISO collaborates closely with the International Electrotechnical Commission (IEC) on all matters of electrotechnical standardization.

The procedures used to develop this document and those intended for its further maintenance are described in the ISO/IEC Directives, Part 1. In particular, the different approval criteria needed for the different types of ISO documents should be noted. This document was drafted in accordance with the editorial rules of the ISO/IEC Directives, Part 2 (see www.iso.org/directives).

Attention is drawn to the possibility that some of the elements of this document may be the subject of patent rights. ISO shall not be held responsible for identifying any or all such patent rights. Details of any patent rights identified during the development of the document will be in the Introduction and/or on the ISO list of patent declarations received (see www.iso.org/patents).

Any trade name used in this document is information given for the convenience of users and does not constitute an endorsement.

For an explanation of the voluntary nature of standards, the meaning of ISO specific terms and expressions related to conformity assessment, as well as information about ISO's adherence to the World Trade Organization (WTO) principles in the Technical Barriers to Trade (TBT) see www.iso.org/iso/foreword.html.

This document was prepared by Technical Committee ISO/TC 150, *Implants for surgery*, Subcommittee SC 6, *Active Implants*.

This second edition cancels and replaces the first edition (ISO 14117:2012), which has been technically revised.

The main changes compared to the previous edition are as follows:

— new definitions added for *interference mode* and *transient exposure*;

— the breakpoint between injected voltage testing and radiated testing reduced from 450 MHz to 385 MHz to account for new wireless services;

— modification and clarification of 4.4, temporary exposure to CW sources;

— new 4.10 concerning *transient exposure* to low-frequency magnetic field sources;

— recognition of multiple electrode leads such as those with IS-4 and DF-4 connectors;

— new 7.4 explicitly requiring separation distance warning when applicable;

— elimination of the table of emitters and frequencies from Annex B;

— addition of new informative Annex N describing generic nomenclature for multi-port, multi-electrode systems;

— addition of new informative Annex O to provide a sample test method for evaluation of transient exposure;

— overall language clarifications, corrections to minor use issues from edition 1, and updated rationale.

Any feedback or questions on this document should be directed to the user's national standards body. A complete listing of these bodies can be found at www.iso.org/members.html.

© ISO 2019 – All rights reserved

Documents
Document Sharing Hub
Full document details: BS ISO 14117:2019

Introduction

The number and the types of electromagnetic (EM) emitters to which patients with active implantable cardiovascular devices are exposed in their day-to-day activities have proliferated over the past two decades. This trend is expected to continue. The interaction between these emitters and active implantable cardiovascular devices (*pacemaker*s and *implantable cardioverter defibrillator*s, or *ICD*s) is an ongoing concern of patients, industry and regulators, given the potential life-sustaining nature of these devices. The risks associated with such interactions include device inhibition or delivery of inappropriate therapy that, in the worst case, could result in serious injury or patient death.

In recent years, other active implantable cardiovascular devices have emerged, most notably devices that perform the function of improving cardiac output by optimizing ventricular synchrony, in addition to performing *pacemaker* or *ICD* functions.

Although these devices can deliver an additional therapy with respect to *pacemaker*s and *ICD* devices, most of their requirements concerning EM compatibility are similar so that, in most cases, the concepts that apply to *pacemaker*s also apply to *CRT-P* devices, and the appropriate way to test a *CRT-P* device is similar to the way *pacemaker*s are tested. Similarly, the concepts that apply to *ICD* devices mostly apply to *CRT-D* devices as well, so the appropriate way to test a *CRT-D* device is similar to the way *ICD* devices are tested.

Standard test methodologies allow manufacturers to evaluate the EM compatibility performance of a product and demonstrate that the product achieves an appropriate level of EM compatibility in uncontrolled EM environments that patients might encounter.

It is important that manufacturers of transmitters and any other equipment that produces EM fields (intentional or unintentional) understand that such equipment can interfere with the proper operation of active implantable cardiovascular devices.

It is important to understand that these interactions can occur despite the conformance of the device to this document and the conformance of emitters to the relevant human exposure safety standards and pertinent regulatory emission requirements, e.g. those of the U.S. Federal Communications Commission (FCC).

Compliance with biological safety guidelines does not necessarily guarantee EM compatibility with active implantable cardiovascular devices. In some cases, the reasonably achievable EM immunity performance for these devices falls below these biological safety limits.

See Annex M for rationale concerning the use of ICNIRP 1998 levels. See Annex M for rationale applicable to emitters above 10 MHz.

The potential for emitter equipment to interfere with active implantable cardiovascular devices is complex and depends on the following factors:

— frequency content of the emitter,

— modulation format,

— power of the signal,

— proximity to the patient,

— coupling factors, and

— duration of exposure.

An emitter with a fundamental carrier frequency up to 1 kHz has the potential to be sensed directly by the *pacemaker* or *ICD*. Also, higher-frequency carriers that have baseband modulation rates below 500 Hz and that have sufficient proximity and power might be sensed by the *pacemaker* or *ICD*.

Additional details regarding this issue can be found in Annex M.

© ISO 2019 – All rights reserved
Documents
Document Sharing Hub
Full document details: BS ISO 14117:2019

This document addresses the EM compatibility of *pacemaker*s and *ICD*s up to 3 000 MHz and is divided in several subclauses.

a) 0 Hz ≤ f < 385 MHz

In the lower-frequency bands (<385 MHz), there are many EM emitters, such as broadcast radio and television, and a number of new technologies or novel applications of established technologies that can increase the likelihood of interaction between the emitters and patients' *pacemaker*s and *ICD*s. A few examples:

— electronic article surveillance (EAS) systems;

— access control systems (radio-frequency identification, or RFID);

— new wireless services in the ultra-high-frequency and very-high-frequency bands;

— magnetic levitation rail systems;

— radio-frequency (RF) medical procedures, such as high-frequency surgery and ablation therapy;

— metal detectors;

— magnetic resonance imaging;

— experimental use of transponders for traffic control;

— wireless charging systems for electric or hybrid vehicles.

b) 385 MHz ≤ f < 3 000 MHz

These are the frequencies, f, that are typically associated with personal hand-held communication devices (e.g. wireless telephones and two-way radios).

Two decades ago, relatively few *pacemaker* patients used hand-held transmitters or were exposed to EM fields from portable transmitters. Hand-held, frequency-modulated transceivers for business, public safety, and amateur radio communications represented the predominant applications. However, the environment has changed rapidly during the past 15 years, with wireless phone systems becoming increasingly common as this technology matured and received widespread public acceptance. Thus, it is becoming increasingly likely that a large portion of the *pacemaker* and *ICD* patient population will be exposed to EM fields from portable wireless phone transmitters operated either by themselves or by others. Also, it should be expected that the wireless technology revolution will continue to evolve new applications using increasingly higher microwave frequencies.

Most electronic equipment, including external medical devices, has been designed for compatibility with relatively low-amplitude EM conditions. Recognizing the wide range of EM environments that patients could encounter, implantable devices have been designed to tolerate much higher-amplitude EM conditions than most other electronic products. However, in some instances, even this enhanced immunity is not sufficient to achieve compatibility with the complex electric and magnetic fields generated by low-power emitters located within a few centimetres of the implantable device. Studies in the mid-1990s demonstrated that some models of *pacemaker*s and *ICD*s had insufficient immunity to allow unrestricted use when in close proximity to some hand-held emitters (e.g. wireless telephones and two-way radios). Although operating restrictions can help prevent EM interaction with implantable devices, this approach is not viewed as an optimum long-term solution. Rather, improved EM compatibility is the preferred method for meeting patient expectations for using wireless services with minimal operating restrictions.

Some technological factors are contributing to the expanding variety of emitters to which patients might now be exposed:

— smaller wireless phones;

© ISO 2019 – All rights reserved

Documents
Document Sharing Hub
Full document details: BS ISO 14117:2019

— the introduction of digital technology;

— peak transmitter power.

Wireless phone size has now been reduced sufficiently so that it is possible for patients to carry a phone that is communicating or in standby mode in a breast pocket immediately adjacent to a pectorally implanted device.

The various wireless phone standards allow for a range of power levels and modulation schemes. Most digital wireless phones are capable of producing greater peak transmitted power than analog phones are capable of producing. Those factors contribute to greater potential interactions with *pacemaker*s and *ICD*s.

For frequencies of 385 MHz ≤ f ≤ 3 000 MHz, this document specifies testing at 120 mW net power into a dipole antenna to simulate a hand-held wireless transmitter 15 cm from the implant. An optional characterization test is described that uses higher power levels to simulate a hand-held wireless transmitter placed much closer to the implant.

c) f ≥ 3 000 MHz

This document does not require testing of devices above 3 GHz. The upper-frequency limit chosen for this document reflects consideration of the following factors:

— the types of radiators of frequencies above 3 GHz;

— the increased device protection afforded by the attenuation of the enclosure and body tissue at microwave frequencies;

— the expected performance of EMI control features that typically are implemented to meet the lower-frequency requirements of this document ; and

— the reduced sensitivity of circuits at microwave frequencies.

Additional details can be found in Clause 5.

In conclusion, it is reasonable to expect that patients with *pacemaker*s and *ICD*s will be exposed to increasingly complex EM environments. Also, the rapid evolution of new technologies and their acceptance by patients will lead to growing expectations for unrestricted use. In view of the changing EM environment and customer expectations, manufacturers will need to evaluate their product designs to assess compatibility with the complex fields, broad range of frequencies, and variety of modulation schemes associated with existing and future applications.

Annex A provides the rationale for certain provisions of this document in order to provide useful background information for reviewing, applying, and revising this document. This rationale is directed toward individuals who are familiar with the subject of this document but have not participated in its drafting. Remarks made in this annex apply to the relevant clause, subclause, or annex in this document; the numbering therefore, might not be consecutive.

© ISO 2019 – All rights reserved
Documents
Document Sharing Hub
Full document details: BS ISO 14117:2019

Active implantable medical devices — Electromagnetic compatibility — EMC test protocols for implantable cardiac pacemakers, implantable cardioverter defibrillators and cardiac resynchronization devices

1 Scope

This document specifies test methodologies for the evaluation of the electromagnetic compatibility (EMC) of active implantable cardiovascular devices that provide one or more therapies for bradycardia, tachycardia and cardiac resynchronization in conjunction with transvenous lead systems.

NOTE This document was designed for pulse generators used with endocardial leads or epicardial leads. At the time of this edition, the authors recognized the emergence of technologies that do not use endocardial leads or epicardial leads for which adaptations of this part will be required. Such adaptations are left to the discretion of manufacturers incorporating these technologies.

It specifies performance limits of these devices, which are subject to interactions with EM emitters operating across the EM spectrum in the two following ranges:

— 0 Hz ≤ f < 385 MHz;

— 385 MHz ≤ f ≤ 3 000 MHz

This document also specifies requirements for the protection of these devices from EM fields encountered in a therapeutic environment and defines their required accompanying documentation, providing manufacturers of EM emitters with information about their expected level of immunity.

2 Normative references

The following documents are referred to in the text in such a way that some or all of their content constitutes requirements of this document. For dated references, only the edition cited applies. For undated references, the latest edition of the referenced document (including any amendments) applies.

ISO 14708-1:2014, *Implants for surgery — Active implantable medical devices — Part 1: General requirements for safety, marking and for information to be provided by the manufacturer*

ISO 14708-2:2019, *Implants for surgery — Active implantable medical devices — Part 2: Cardiac pacemakers*

ISO 14708-6:2019, *Implants for surgery — Active implantable medical devices — Part 6: Particular requirements for active implantable medical devices intended to treat tachyarrhythmia (including implantable defibrillators)*

3 Terms, definitions, symbols and abbreviated terms

3.1 Terms and definitions

For the purposes of this document, the terms and definitions given in ISO 14708-1:2014, ISO 14708-2:2019, ISO 14708-6:2019 and the following apply.

ISO and IEC maintain terminological databases for use in standardization at the following addresses:

— ISO Online browsing platform: available at https://www.iso.org/obp

© ISO 2019 – All rights reserved

Documents
Document Sharing Hub
Full document details: BS ISO 14117:2019

— IEC Electropedia: available at http://www.electropedia.org/

3.1.1
pacemaker
implantable pacemaker
active implantable medical device intended to treat bradyarrhythmias, comprising an implantable DUT and leads

[SOURCE: ISO 14708-2:2019, 3.3, modified — “DUT” substituted for “pulse generator”, and the admitted term" implantable pacemaker" added.]

3.1.2
ICD
implantable cardioverter defibrillator
active implantable medical device comprising an implantable DUT and lead(s) that is intended to detect and correct tachycardias and fibrillation by application of cardioversion/defibrillation pulse(s) to the heart

[SOURCE: ISO 14708-6:2019, 3.2, modified — “DUT” substituted for “pulse generator”.]

3.1.3
CRT-P
implantable cardiac resynchronization therapy pacing device
active implantable medical device intended to provide improved ventricular activation to optimize cardiac output, comprising an implantable DUT and leads

[SOURCE: ISO 14708-2:2019, 3.7, modified — “DUT” substituted for “pulse generator”.]

3.1.4
CRT-D
implantable cardiac resynchronization therapy/defibrillator device
active implantable medical device intended to detect and correct tachycardias and fibrillation by application of cardioversion/defibrillation pulses to the heart, and to provide improved ventricular activation to optimize cardiac output, comprising an implantable DUT and leads

[SOURCE: ISO 14708-6:2019, 3.34, modified — “DUT" substituted for "pulse generator".]

3.1.5
inhibition generator
equipment that generates a simulated heart signal for devices within the scope of this document

3.1.6
maximum permanently programmable sensitivity
condition where the sensing channels of an *ICD* or *pacemaker* are set, either automatically by the device or programmed by a clinician, to detect the lowest amplitude signals

Note 1 to entry: These settings are intended for use without direct medical supervision.

Note 2 to entry: Sensitivity settings are usually expressed in terms of the minimum voltage that can be sensed. Therefore, a sensitivity of 1 mV is actually more sensitive than a setting of 2 mV.

Note 3 to entry: An AIMD can have settings, including those for sensitivity, that by design of the device or its software, are only temporarily available for use during diagnostic testing (such as during manufacture) or for testing at the time of implantation. Such settings are therefore unavailable for use by patients when not under immediate medical care and are not intended to be encompassed by the testing herein.

3.1.7
interference mode
where asynchronous pacing is delivered in response to detected interference

© ISO 2019 – All rights reserved
Documents
Document Sharing Hub
Full document details: BS ISO 14117:2019

3.1.8
transient exposure
exposure of the implanted DUT and leads for a period of less than 15 seconds

Note 1 to entry: 15 seconds is considered to be a reasonably foreseeable maximum exposure duration for persons walking past a stationary emitter.

3.2 Acronyms and abbreviations

Table 1 shows acronyms and abbreviations used in this document.

Table 1 — List of acronyms and abbreviations

Acronym or abbreviation	Description
A	atrial
AAMI	Association for the Advancement of Medical Instrumentation
ACA	antenna cable attenuation (+dB)
AdBm	power meter “A” reading (dBm)
ASIC	Application Specific Integration Circuit
ATP	antitachycardia pacing
BdBm	power meter “B” reading (dBm)
BPEG	British Pacing and Electrophysiology Group
bpm	beats per minute
CENELEC	European Committee for Electrotechnical Standardization
CIED	Cardiac Implantable Electronic Device
CRT	cardiac resynchronization therapy
CRT-P	*implantable cardiac resynchronization therapy pacing device*
CRT-D	*implantable cardiac resynchronization therapy/defibrillator device*
CW	continuous wave
dB	decibel
dBm	decibels above a milliwatt
DCF	directional coupler forward port coupling factor (+dB)
DCR	directional coupler reflected port coupling factor (+dB)
DUT	device under test
EAS	electronic article surveillance
ECG	electrocardiogram
EGM	electrogram
EM	electromagnetic
EMC	electromagnetic compatibility
EMI	electromagnetic interference
EN	European Norm
ESMR	enhanced specialized mobile radio
f	frequency
FCC	Federal Communications Commission
FP	forward dipole power (mW)
FPdBm	forward dipole power (dBm)
ICD	*implantable cardioverter defibrillator*
NOTE Throughout this document, DUT has been used to designate all devices within the scope of this document. When a certain test or requirement applies only to a specific type of device, that designation is used.	

© ISO 2019 – All rights reserved

Documents
Document Sharing Hub
Full document details: BS ISO 14117:2019

Table 1 *(continued)*

Acronym or abbreviation	Description
ICNIRP	International Commission on Non-Ionizing Radiation Protection
IEC	International Electrotechnical Commission
IEEE	Institute of Electrical and Electronics Engineers
λ	wavelength
NASPE	North American Society of Pacing and Electrophysiology
NP	net dipole power (mW)
o.d.	outside diameter
Ωcm	measure of resistivity (Ohm-cm)
PCS	personal communication services
PVARP	post ventricular atrial refractory period
RF	radio frequency
RFID	radio-frequency identification
rms	root mean square
RP	reflected dipole power (mW)
RPdBm	reflected dipole power (dBm)
SMA	subminiature "A"
T_{shs}	simulated heart signal interval
V	ventricular
VF	ventricular fibrillation
VSWR	voltage standing wave ratio
VT	ventricular tachycardia
NOTE Throughout this document, DUT has been used to designate all devices within the scope of this document. When a certain test or requirement applies only to a specific type of device, that designation is used.	

4 Test requirements for the frequency band 0 Hz ≤ f ≤ 3 000 MHz

4.1 General requirements for all devices

Implantable pacemakers, *ICDs* and CRT devices shall not create an unacceptable risk for patients because of susceptibility to electrical influences due to external EM fields, whether through malfunction of the device, damage to the device, heating of the device, or by causing local increase of induced electrical current density within the patient.

In 4.2 through 4.9, connections between the DUT and a tissue-equivalent interface circuit are illustrated using generic DUT symbols with a layered stacking of connection points on the DUT to indicated additional lead ports. These drawings were initially created for simple unipolar or bipolar ports intended to connect to leads with either a single or, at most, two electrodes. With the advent of leads having more than two electrodes (e.g. IS-4 or DF-4), these interconnection drawings become considerably more complex. In addition, the number and combination of port types for a given DUT can vary widely between manufacturers. Therefore, the connection drawings, even as given, should be treated as guidance, and engineering judgement should be applied to determine the set of connections necessary for a given DUT and type of test. To assist users of this document, Annex N has been prepared which illustrates a generic DUT with a reasonable worst case number of ports and electrodes. Annex N further discusses how such a complex DUT should be treated with respect to interconnection to an appropriate tissue-equivalent interface.

In 4.2 through 4.5, the test procedures specify the optional use of a coupling capacitor C_x. If this capacitor is used to demonstrate compliance with the requirements of the related subclause, then the value of C_x can be determined according to the method described in Annex E.

© ISO 2019 – All rights reserved
Documents
Document Sharing Hub
Full document details: BS ISO 14117:2019

The following tests are generally intended to address the compatibility of the intracardiac signal sensing. Any additional physiological sensors may be turned off during testing. Physiologic sensors should be considered as part of the risk assessment required by 5.5 of ISO 14708-1:2014.

The tests outlined in this document are to be seen as type tests and shall be performed on a sample of one device as being representative of the devices leaving volume production.

Compliance shall be confirmed if, after performance of the appropriate procedures described in 4.2 to 4.9, the values of the characteristics when measured are as stated by the manufacturer specification of the DUT.

All requirements shall be met for all settings of the DUT, except as follows:

— For *pacemaker*s and *CRT-P* devices: those sensitivity settings that the manufacturer specifies in the accompanying documentation as not meeting the requirements of 4.4 and 4.5.2.1.

— For *ICD*s and *CRT-D* devices: those sensitivity settings that the manufacturer specifies in the accompanying documentation as not meeting the requirements of 4.5.2.2.

This does not mean that all combinations of settings are tested, but at least the setting to which the device is preset by the manufacturer should be tested completely.

If the case of the DUT is covered with an insulating material, the DUT (or part of it) should be immersed in a 9 g/l saline bath held in a metal container; the metal container should be connected directly to the test circuit as applicable in each test set up.

Manufacturers that use an automatic gain control function (or similar feature) for sensing purposes should include a detailed test method.

4.2 Induced lead current

4.2.1 General requirements

The DUT shall be constructed so that ambient EM fields are unlikely to cause hazardous local increases of induced electrical current density within the patient.

4.2.2 *Pacemakers* and *CRT-P* devices

Test equipment: Use the test setup specified in Figure 2; the tissue-equivalent interface circuit specified in Figure D.1 and Table D.1a); the low-pass filter specified in Figure D.4; two oscilloscopes, input impedance nominal 1 MΩ; and test signal generators, output impedance 50 Ω.

Test signal: Two forms of test signal shall be used.

Test signal 1 shall be a sinusoidal signal of 1 V peak-to-peak amplitude. The frequency shall be either swept over the range 16,6 Hz to 20 kHz at a rate of 1 decade per minute or applied at a minimum of four distinct, well-spaced frequencies per decade between 16,6 Hz and 20 kHz, with an evenly distributed dwell time of at least 60 s per decade.

Test signal 2 shall be a sinusoidal carrier signal, frequency 500 kHz, with continuous amplitude modulation at 130 Hz (double sideband with carrier) (see Figure 1).

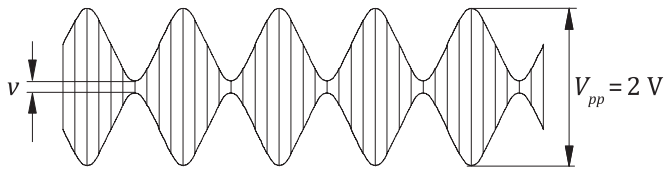

Figure 1 — Test signal 2

© ISO 2019 – All rights reserved

Documents
Document Sharing Hub
Full document details: BS ISO 14117:2019

The maximum peak-to-peak voltage of the modulated signal shall be 2 V. The modulation index, M, shall be 95 %, where

$$M = \frac{V_{pp} - v}{V_{pp} + v} \times 100$$

Test procedure: The test signal generator shall be connected through input C of the interface circuit as shown in Figure 2. The test signal shall be measured on the oscilloscope connected to monitoring point D.

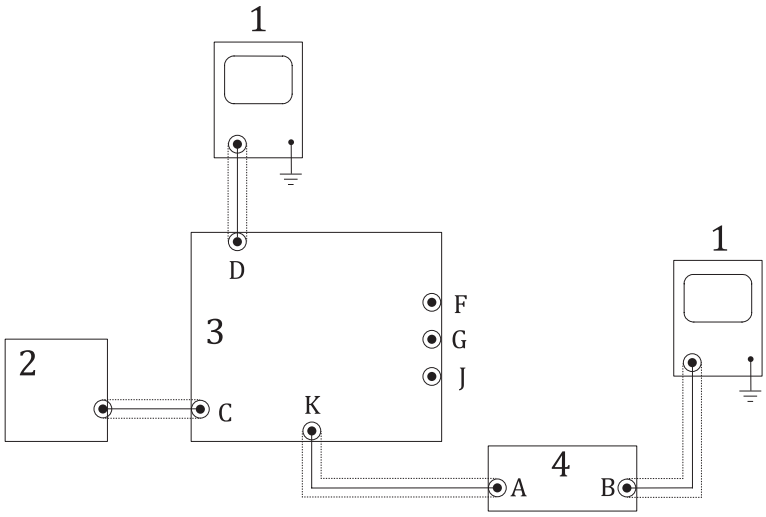

Key

1 oscilloscope

2 test signal generator

3 tissue equivalent interface

4 filter

Figure 2 — Test setup for measurement of induced current

The induced electrical current is measured by the oscilloscope connected to test point K through the low-pass filter (as specified in Figure D.4), as shown in Figure 2. When test signal 1 is being used, the low-pass filter shall be switched to bypass mode.

The capacitor C_x of the interface circuit (see Figure D.1) shall be bypassed unless required to eliminate spurious low-frequency signals produced by the interference signal generator (see Annex E).

NOTE 1 It is not mandatory that a current measurement be made in the period from 10 milliseconds (ms) preceding a stimulation pulse to 150 ms after the stimulation pulse.

The *pacemaker* or *CRT-P* shall be categorized into one or more of four groups as appropriate:

— single-channel unipolar devices shall be Group a);

— multichannel unipolar devices shall be Group b);

— single-channel bipolar devices shall be Group c);

— multichannel bipolar devices shall be Group d).

The bipolar channel should be tested in unipolar or bipolar mode, or both, according to the programmability of the device and should be changed where applicable.

© ISO 2019 – All rights reserved
Documents
Document Sharing Hub
Full document details: BS ISO 14117:2019

Any terminal of the DUT not being tested shall be connected to the channel under test through a resistor of value $R \geq 10\ k\Omega$, as specified by the manufacturer.

Group a): the DUT shall be connected to the coupled outputs F and G of the tissue-equivalent interface (as shown in Figure 3), with output J connected to the case.

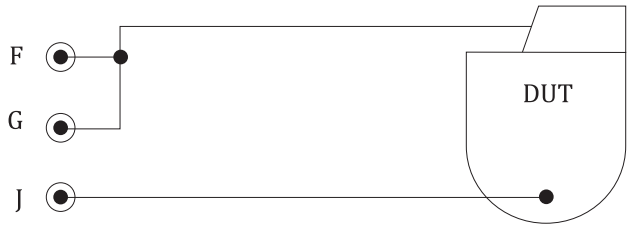

Figure 3 — Connection to a single-channel unipolar device

Group b): every input/output of the DUT shall be connected, in turn, to the coupled outputs F and G of the tissue-equivalent interface (as shown in Figure 4), with output J connected to the case.

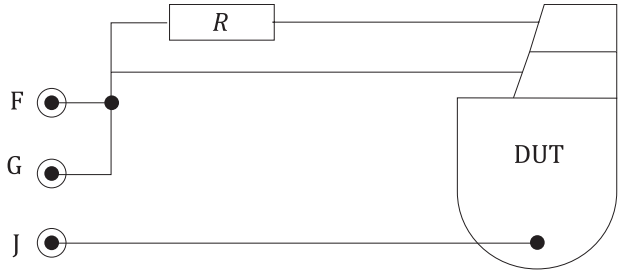

Figure 4 — Connection to a multichannel unipolar device

Group c): common mode performance shall be tested with the DUT connected to the outputs F and G of the tissue-equivalent interface (as shown in Figure 5), with output J connected to the case.

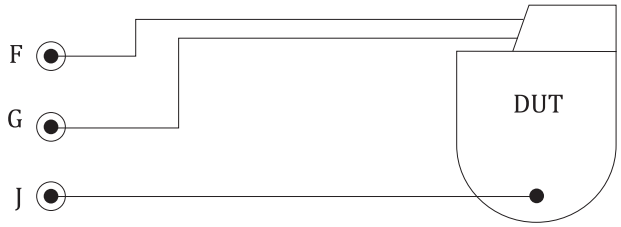

Figure 5 — Common mode connection to single-channel bipolar device

Differential mode performance shall be tested using the test signals reduced to one-tenth amplitude. The *pacemaker* shall be connected between the coupled outputs F and G and the output J of the tissue-equivalent interface (as shown in Figure 6).

Figure 6 — Differential mode connection to single-channel bipolar device

© ISO 2019 – All rights reserved

Documents
Document Sharing Hub
Full document details: BS ISO 14117:2019

Group d): common mode performance shall be tested by every input and output of the *pacemaker* being connected, in turn, to outputs F and G of the tissue-equivalent interface (as shown in Figure 7), with output J connected to the case.

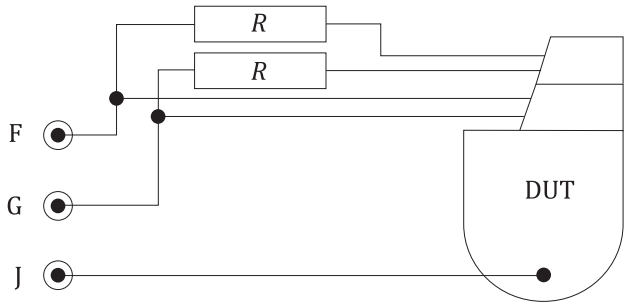

Figure 7 — Common mode connection to multichannel bipolar device

Differential mode performance shall be tested using the test signals reduced to one-tenth amplitude. Every input and output of the *pacemaker* shall be connected, in turn, between the coupled outputs F and G and the output J of the tissue-equivalent interface (as shown in Figure 8).

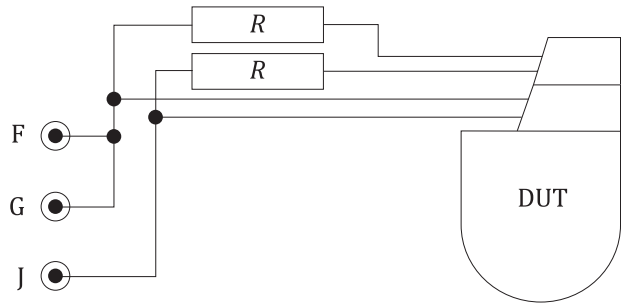

Figure 8 — Differential mode connection to multichannel bipolar device

The current (root mean square, or rms) shall be determined by dividing the peak-to-peak voltage reading on the oscilloscope, connected to test point K by 232 Ω for test signal 1. For test signal 2, the measurement shall be taken at test point B (filter output) using either an oscilloscope that has rms measurement capabilities, or a true rms voltmeter. The measurement shall be divided by 82 Ω to arrive at a value for current.

Compliance shall be confirmed if:

— for test signal 1, the measured current is not greater than that specified in Table 2; and

— for test signal 2, the current at modulating frequency of 130 Hz is not greater than 50 μA rms.

Table 2 — Spurious injection current limits

f	Current rms
16,6 Hz ≤ ƒ ≤ 1 kHz	50 μA
1 kHz ≤ ƒ ≤ 20 kHz	50 μA × (f/1 kHz)

© ISO 2019 – All rights reserved
Documents
Document Sharing Hub
Full document details: BS ISO 14117:2019

4.2.3 *ICD*s and *CRT-D* devices

4.2.3.1 Test requirements

Test equipment: Use the test setup specified in Figure 2; the tissue-equivalent interface circuit specified in Figure D.1 and in either Table D.1a) or Table D.1b); the low-pass filter specified in Figure D.4; two oscilloscopes, input impedance nominal 1 MΩ, < 30 pF; and test signal generators, output impedance 50 Ω.

Test signal: Two forms of test signal shall be used.

Care should be taken that the test signal generator does not itself produce low-frequency components (see Annex E).

Test signal 1 shall be a sinusoidal signal of 1 V peak-to-peak amplitude. The frequency shall be either swept over the range 16,6 Hz to 20 kHz at a rate of 1 decade per minute or applied at a minimum of four distinct, well-spaced frequencies per decade between 16,6 Hz and 20 kHz, with an evenly distributed dwell time of at least 60 s per decade.

Test voltage 2 shall be a sinusoidal carrier signal, frequency 500 kHz, with continuous amplitude modulation at 130 Hz (double sideband with carrier) (see Figure 1).

The maximum peak-to-peak voltage of the modulated signal shall be 2V. The modulation index, *M*, shall be 95 % where

$$M = \frac{V_{pp} - v}{V_{pp} + v} \times 100$$

Test procedure: The test signal generator shall be connected through input C of the interface circuit as shown in Figure 2. The test voltage shall be measured on the oscilloscope connected to monitoring point D.

The measuring oscilloscope shall be connected to test point K of the interface circuit through the low-pass filter (see Figure D.4) as shown in Figure 2. When the test signal 1 is being used, the low-pass filter shall be switched to bypass mode.

The capacitor C_x of the interface circuit (see Figure D.1) shall be bypassed unless required to eliminate spurious low-frequency signals produced by the interference signal generator (see Annex E).

Current measurement is not required in the period from 10 ms preceding a stimulation pulse to 150 ms after the stimulation pulse.

The DUT shall be set to the factory settings (nominal or as recommended by the manufacturer) during the test. The tachyarrhythmia therapy functions of the DUT shall be inactive during the test, and the high-voltage capacitors, if any, shall not be charged.

CAUTION — Take care to ensure that the high-voltage capacitors are discharged. Failure to use safe laboratory practices can result in severe electrical shock, resulting in personal injury or death to the persons handling the equipment or conducting the test. Also, damage to electrical equipment, particularly the tissue-equivalent interface circuit, is likely.

4.2.3.2 Measurement of current injected through sense/pace terminals

Select the tissue-equivalent interface circuit specified in Figure D.1 and Table D.1a). If the DUT offers multichannel sensing/pacing, then every input or output of the DUT shall be tested in turn. Any sense/pace terminal of the DUT not being tested shall be connected to the equivalent terminal of the channel under test through a resistor of value $R \geq 10$ kΩ as specified by the manufacturer (for safety, cardioversion/defibrillation terminals are loaded with high-voltage 50 Ω, 25 W resistors, R_L).

Bipolar sense/pace DUTs shall be tested in two configurations.

© ISO 2019 – All rights reserved

Documents
Document Sharing Hub
Full document details: BS ISO 14117:2019

Common mode performance shall be tested with the sense/pace terminals of the channel under test connected to the output F and G of the tissue-equivalent interface (as shown in Figure 9) and the case connected to output J.

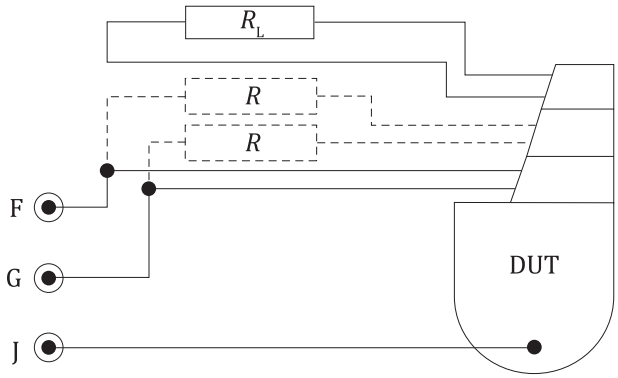

Figure 9 — Common mode connection to multichannel bipolar device

Differential mode performance shall be tested using test signals 1 and 2 reduced to one-tenth amplitude. The sense/pace terminals of the channel under test shall be connected between the coupled outputs F and G and the output J of the tissue-equivalent interface (as shown in Figure 10).

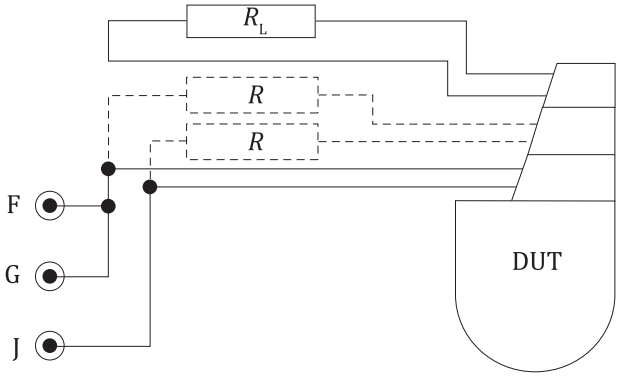

Figure 10 — Differential mode connection to multichannel bipolar device

The current (rms) shall be determined by dividing the peak-to-peak voltage reading on the oscilloscope connected to test point K through the low-pass filter (as shown in Figure D.4 in bypass mode) by 232 Ω for test signal 1. For test signal 2, the measurement shall be taken at test point B (filter output) using either an oscilloscope that has rms measurement capabilities, or a true rms voltmeter. The measurement shall be divided by 82 Ω to arrive at a value for current. .

Alternatively, a true rms voltmeter with input impedance ≥1 MΩ may be used to determine the rms current. The reading shall be accurate to ±10 % within a bandwidth of the measured frequencies.

4.2.3.3 Measurement of current injected through cardioversion/defibrillation terminals

Select the tissue-equivalent interface circuit specified in Figure D.1 and Table D.1b).

The sense/pace terminals shall be loaded with resistors R_L of 500 Ω ± 5 %. For a multichannel sensing/pacing device, the sense/pace terminals shall be connected through resistors R of ≥ 10 kΩ, as shown. The manufacturer shall be free to choose the value of the resistors that are appropriate for the device under test. If the DUT has more than two cardioversion/defibrillation terminals, the terminals not being tested shall be connected to one of the terminals under test through a resistor R ≥ 10 kΩ as specified by the manufacturer.

© ISO 2019 – All rights reserved
Documents
Document Sharing Hub
Full document details: BS ISO 14117:2019

If both of the cardioversion/defibrillation terminals under test are intended to be connected to endocardial leads, then the test signals shall be reduced to one-tenth amplitude. If one or both of the cardioversion/defibrillation terminals under test are intended to be connected to patches on the heart, the test signals shall be reduced to one-half amplitude. If any of the cardioversion/defibrillation terminals are intended to be connected to a subcutaneous patch, then the full test signal amplitude shall be used.

Common mode performance shall be tested with the cardioversion/defibrillation terminals connected to the outputs F and G of the tissue-equivalent interface (as shown in Figure 11) and the case connected to output J.

If the case of the DUT is an active terminal, no common mode test is required.

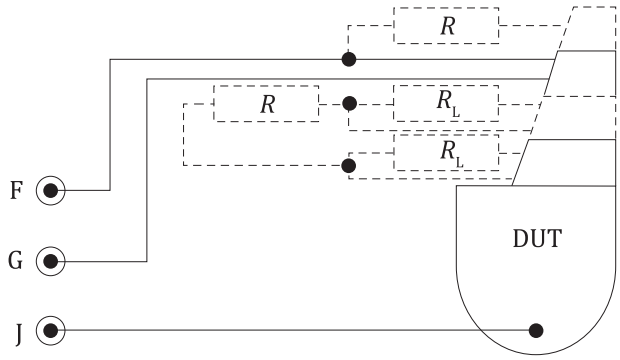

Figure 11 — Common mode connection for cardioversion/defibrillation terminals

Differential mode performance shall be tested with the cardioversion/defibrillation terminals connected between the coupled outputs F and G and the output J of the tissue-equivalent interface (as shown in Figure 12).

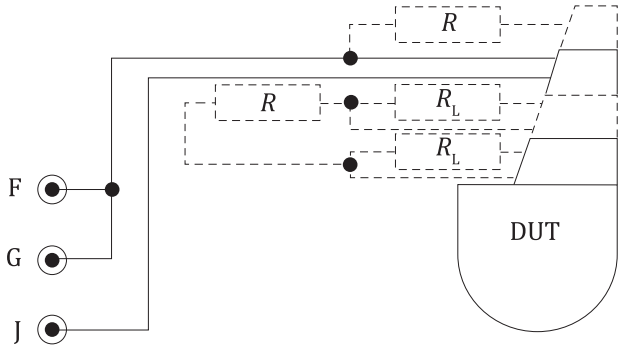

Figure 12 — Differential mode connection for cardioversion/defibrillation terminals

If the DUT has more than two cardioversion/defibrillation terminals, the test is performed on each pair of terminals in turn.

The current is determined by dividing the peak-to-peak voltage reading on the oscilloscope connected to test point K through the low-pass filter (as shown in Figure D.4) by 133 Ω for test signal 1. For test signal 2, the measurement shall be taken at test point B (filter output) using either an oscilloscope that has rms measurement capabilities, or a true rms voltmeter. The measurement shall be divided by 47 Ω to arrive at a value for current..

Alternatively, a true rms voltmeter with input impedance ≥1 MΩ can be used to determine the rms current. The reading shall be accurate to ±10 % within a bandwidth of at least 20 kHz.

© ISO 2019 – All rights reserved

Documents
Document Sharing Hub
Full document details: BS ISO 14117:2019

Compliance shall be confirmed if:

— for test voltage 1, the current (rms) shall be no greater than that specified in Table 3a) for sense/pace terminals and Table 3b) for cardioversion/defibrillation terminals; and

— for test voltage 2, the current at 130 Hz shall be no greater than 50 µA rms.

Table 3a — Spurious injection current limits for sense/pace terminals

f	Current rms
16,6 Hz ≤ f ≤ 1 kHz	50 µA
1 kHz ≤ f ≤ 20 kHz	50 µA × (f/1 kHz)

Table 3b — Spurious injection current limits for cardioversion/defibrillation terminals

f	Current rms
16,6 Hz ≤ f ≤ 1 kHz	50 µA
1 kHz ≤ f ≤ 20 kHz	50 µA × (f/1 kHz)

4.3 Protection from persisting malfunction attributable to ambient electromagnetic fields

4.3.1 General requirements

The DUT shall be constructed so that ambient EM fields are unlikely to cause malfunction of the DUT that persists after the removal of the EM field.

4.3.2 *Pacemaker* and *CRT-P* devices

4.3.2.1 Malfunction due to electromagnetic interference in the frequency range of 16,6 Hz to 10 MHz

Test equipment: Use the test setup in Figure 13, the tissue-equivalent interface circuit specified by Figure D.2; two oscilloscopes, input impedance nominal 1 MΩ; and a test signal generator, output impedance 50 Ω.

Test signal: The test signal shall be a continuous sinusoidal signal that shall be either swept over the frequency range of 16,6 Hz to 10 MHz at a rate of 1 decade per minute or applied at a minimum of four distinct, well-spaced frequencies per decade with an evenly distributed dwell time of at least 60 s per decade.

The test signal amplitude for unipolar and common mode test shall be as shown in Table 4.

Table 4 — Peak-to-peak amplitudes V_{pp} in the range 16,6 Hz to 10 MHz

f	V_{pp}
16,6 Hz ≤ f ≤ 20 kHz	1 V
20 kHz ≤ f ≤ 140 kHz	1 V × (f / 20 kHz)
140 kHz ≤ f ≤ 10 000 kHz	7 V × (f / 140 kHz)$^{0,162\,4}$

Differential mode performance shall be tested using the test signal reduced to one-tenth amplitude of the common mode test.

Test procedure: The test signal generator shall be connected through input C of the interface circuit (as specified in Figure D.2), and as shown in Figure 13. The test signal shall be measured on the oscilloscope connected to monitoring point D. The operation of the DUT can be recorded on the oscilloscope connected to monitoring point K.

© ISO 2019 – All rights reserved
Documents
Document Sharing Hub
Full document details: BS ISO 14117:2019

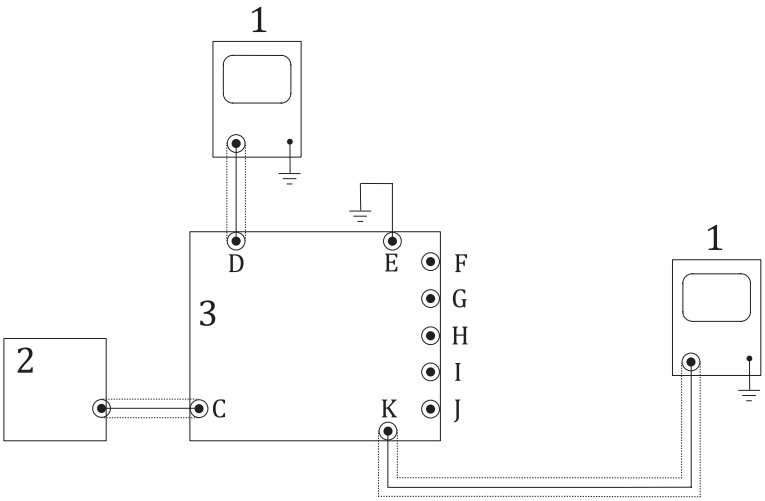

Key

1 oscilloscope

2 test signal generator

3 tissue equivalent interface

Figure 13 — Test setup to check for induced malfunction

The DUT shall be categorized into one or more of four groups as appropriate:

— single-channel unipolar devices shall be Group a);

— multichannel unipolar devices shall be Group b);

— single-channel bipolar devices shall be Group c);

— multichannel bipolar devices shall be Group d).

A bipolar channel should be tested in all possible modes (unipolar, bipolar, or both), according to the programmability of the device.

Group a): the DUT shall be connected to the coupled outputs H and I of the tissue-equivalent interface (as shown in Figure 14), with output J connected to the case.

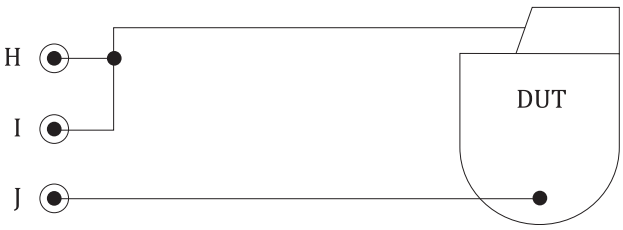

Figure 14 — Connection to a single-channel unipolar device

Group b): every input and output of the DUT shall be connected in parallel to the paired, coupled outputs F and G and H and I of the tissue-equivalent interface (as shown in Figure 15), with output J connected to the case.

© ISO 2019 – All rights reserved

Documents
Document Sharing Hub
Full document details: BS ISO 14117:2019

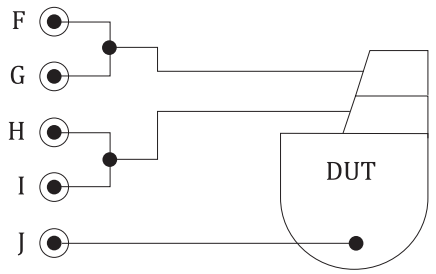

Figure 15 — Connection to a multichannel unipolar device

Group c): common mode performance shall be tested with the DUT connected to the outputs H and I of the tissue-equivalent interface (as shown in Figure 16), with output J connected to the case.

Figure 16 — Common mode connection to a single-channel bipolar device

Differential mode performance shall be tested with the DUT connected to the coupled outputs H and I and the output J of the tissue-equivalent interface (as shown in Figure 17).

Figure 17 — Differential mode connection to a single-channel bipolar device

Group d): common mode performance shall be tested by every input and output of the DUT being connected to the outputs F, G, H, and I of the tissue-equivalent interface (as shown in Figure 18), with output J connected to the case.

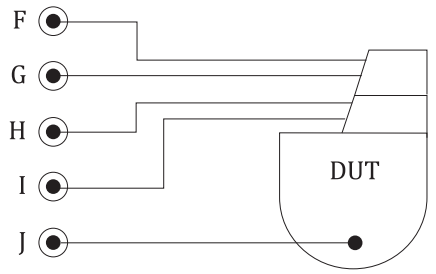

Figure 18 — Common mode connection to a multichannel bipolar device

Differential mode performance shall be tested with every input and output of the DUT being connected, in turn, between the coupled outputs H and I and the output J of the tissue-equivalent interface (as shown in Figure 19).

© ISO 2019 – All rights reserved
Documents
Document Sharing Hub
Full document details: BS ISO 14117:2019

Any terminal of the DUT not being tested shall be connected to the equivalent terminal of the channel under test through a resistor of value $R \geq 10$ kΩ as specified by the manufacturer.

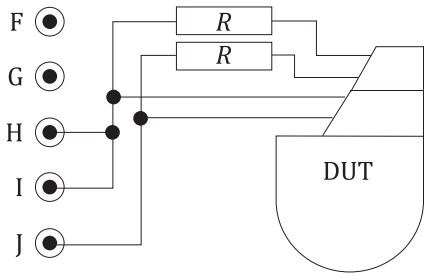

Figure 19 — Differential mode connection to a multichannel bipolar device

Compliance shall be confirmed if, after application of the specified test signal, the DUT functions as it did before the test without further adjustment.

4.3.2.2 Malfunction due to electromagnetic interference in the frequency range of 10 MHz to 385 MHz

Test equipment: Use the test setup shown in Figure 21; the injection network specified by Figure D.5; an oscilloscope (#1), input impedance 50 Ω, accuracy of ±10 % within a bandwidth of at least 385 MHz; and a test signal generator, output impedance 50 Ω.

Test signal: The test signal shall be a modulated signal of the form as shown in Figure 20. The carrier shall be amplitude modulated with a 130 Hz sinusoidal wave to create modulation bursts of 100 ms duration. The burst-to-burst interval, *T*, shall be measured from leading edge to leading edge (see Figure 20). The burst-to-burst interval, *T*, of the modulated signal shall be set to 700 ms ± 50 ms.

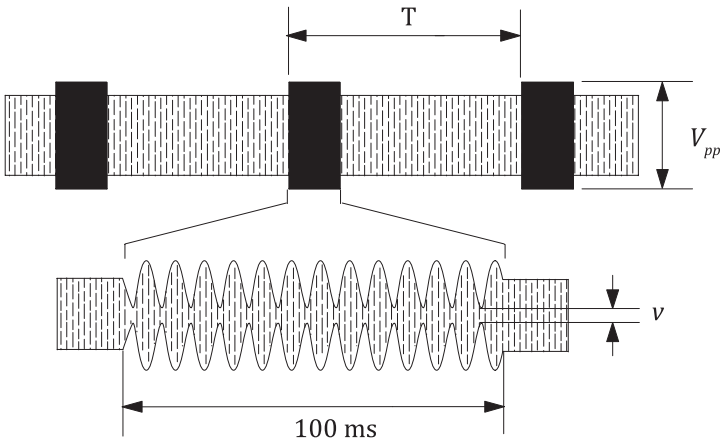

Figure 20 — Test signal for frequencies between 10 MHz and 385 MHz

The modulation bursts shall start and terminate at zero crossings of the modulation signal, thus the envelope starts and terminates continuously. The burst count is 13 complete modulation cycles. The modulation index, *M*, shall be 95 %, where:

$$M = \frac{V_{\mathrm{pp}} - v}{V_{\mathrm{pp}} + v} \times 100$$

The peak-to-peak amplitude of the test signal, V_{pp}, cannot be measured directly at any connector of the injection network during the test. Therefore, it is calculated from the voltage at connector D, V_{osc}, by applying the calibration factor, *m*, of Annex F.

© ISO 2019 – All rights reserved

Documents
Document Sharing Hub
Full document details: BS ISO 14117:2019

Test procedure: Prior to any testing, calibrate the setup using the procedure in Annex F. The test signal generator shall be connected to the injection network through input C as shown in Figure 21. The test signal generator shall be adjusted so that the test signal amplitude measured on oscilloscope #1 connected to monitoring point D (V_{osc}) when multiplied by the calibration factor for the injection network, determined according to the method of Annex F, is equal to the required test signal amplitude, V_{pp} of 14 V.

The modulated test signal shall be applied at a minimum of six distinct, well-spaced frequencies per decade, beginning at 10 MHz and ending at 385 MHz (e.g. 10, 20, 40, 60, 80, 100, 200, 385), with an evenly distributed dwell time of at least 60 s per decade. The amplitude of the test signal (V_{pp}) is defined as the peak-to-peak amplitude of the open-circuit voltage driving the outputs (F, G) of the injection network.

NOTE If an rms voltmeter is used during calibration procedure and testing at monitoring point D, then the test value is 53 % of the calibration value, to provide a nominal modulated test amplitude of 14 V_{pp} (open circuit) at outputs F and G.

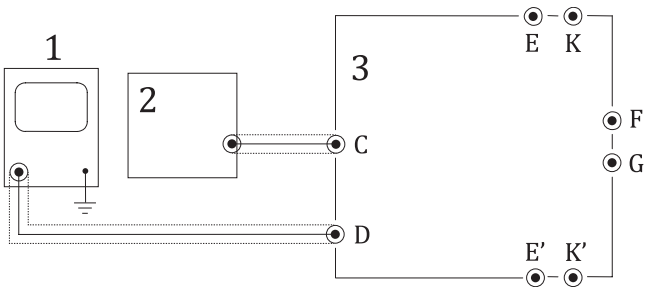

Key

1 oscilloscope

2 test signal generator

3 injection network

Figure 21 — Test setup to check for malfunction at high frequency

Connections between outputs F and G and the DUT shall be by copper straps, width ≥5 mm, length ≤50 mm (not including the length of the standard connector pin inserted into the device header). Unused ports on the injection network shall be fitted with 50 Ω terminations.

Unipolar devices shall be connected to output F of the injection network (as shown in Figure 22), using appropriate RF techniques for all connections. Each channel of a multichannel device shall be tested in turn, and any channel not under test shall be turned off and loaded with 500 Ω load resistors (R_L).

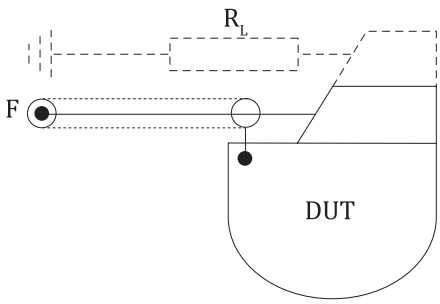

Figure 22 — Connection to a unipolar device

Bipolar devices shall be connected to outputs F and G of the injection network (as shown in Figure 23), using appropriate RF techniques for all connections. Each channel of a multichannel device shall be tested in turn, and any channel not under test shall be turned off and loaded with 500 Ω load resistors (R_L).

© ISO 2019 – All rights reserved
Documents
Document Sharing Hub
Full document details: BS ISO 14117:2019

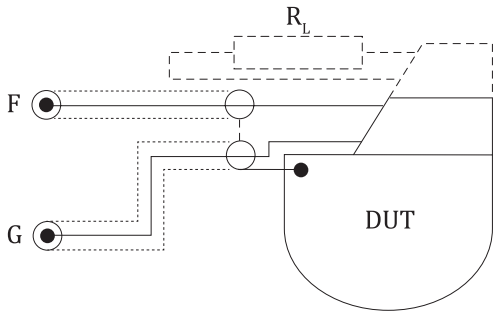

Figure 23 — Connection to a bipolar device

Compliance shall be confirmed if, after application of the specified test signal, the DUT functions as it did before the test without further adjustment.

4.3.2.3 Malfunction due to electromagnetic interference in the frequency range of 385 MHz to 3 000 MHz

Test: The DUT shall be subjected to the test procedure of 4.9.3.2 "optional characterization" of this document (without device monitoring and recording of DUT performance, which is not required for this test).

The test levels specified in 4.9.3.2 are mandatory for this subclause.

Compliance shall be confirmed if the DUT functions as it did before the test without further adjustment.

4.3.3 *ICD*s and *CRT-D* devices

4.3.3.1 Malfunction due to electromagnetic interference in the frequency range of 16,6 Hz to 10 MHz

4.3.3.1.1 Test equipment and signal

Test equipment: Use the tissue-equivalent interface circuits as specified in Annex D, Figure D.2 and Figure D.3; two oscilloscopes, input impedance nominal 1 MΩ, <30 pF. The oscilloscope connected to test point D (in Figure 13 or Figure 26) shall have an accuracy of ±10 % within a bandwidth of at least 30 MHz; and a test signal generator, output impedance 50 Ω.

CAUTION — Good high-frequency test procedures should be observed. Modification of the test circuits is allowed but electrical equivalence shall be maintained.

Test signal: The test signal shall be a continuous sinusoidal signal that shall be either swept over the frequency range of 16,6 Hz to 10 MHz at a rate of 1 decade per minute or applied at a minimum of four distinct, well-spaced frequencies per decade with an evenly distributed dwell time of at least 60 s per decade.

The test signal amplitude for common mode test shall be as shown in Table 5 below:

Table 5 — Peak-to-peak amplitudes V_{pp} in the range 16,6 Hz to 10 MHz

f	V_{pp}
16,6 Hz ≤ f ≤ 20 kHz	1 V
20 kHz ≤ f ≤ 140 kHz	1 V × (f / 20 kHz)
140 kHz ≤ f ≤ 10 000 kHz	7 V × (f / 140 kHz)$^{0,162\,4}$

Differential mode performance shall be tested using the test signal reduced to one-tenth amplitude of the common mode test.

© ISO 2019 – All rights reserved

AVA Documents Document Sharing Hub
Full document details: BS ISO 14117:2019

The DUT shall be set to the factory settings (nominal or as recommended by the manufacturer) during the test. The tachyarrhythmia therapy functions of the implantable DUT shall be inactive during the test, and the high-voltage capacitors, if any, shall be discharged.

CAUTION — Take care to ensure that the high-voltage capacitors are discharged. Failure to use safe laboratory practices can result in severe electrical shock, resulting in personal injury or death to the persons handling the equipment or conducting the test. Also, damage to electrical equipment, particularly the tissue-equivalent interface circuits, is likely.

4.3.3.1.2 Malfunction because of electrical interference on the sense or pace terminals

Test procedure: Select the tissue-equivalent interface circuit specified by Figure D.2. The test signal generator shall be connected through input C of the interface circuit, as shown in Figure 13. The test voltage shall be measured on the oscilloscope connected to test point D of the interface circuit. The operation of the DUT can be monitored by the oscilloscope connected to test point K.

The capacitor C_x of the interface circuit (see Figure D.2) shall be bypassed unless required to eliminate spurious low-frequency signals produced by the interference signal generator (see Annex E).

Any sense/pace terminal of the DUT not being tested shall be connected to the equivalent terminal of the channel under test through a resistor of value $R \geq 10$ kΩ as specified by the manufacturer (for safety, cardioversion/ defibrillation terminals are loaded with high-voltage 50 Ω, 25 W resistors R_L).

A DUT with bipolar sensing/pacing shall be tested in two configurations.

Common mode performance shall be tested with the pairs of sense/pace terminals connected to the outputs F, G, H, and I of the tissue-equivalent interface (as shown in Figure 24) and the case connected to output J.

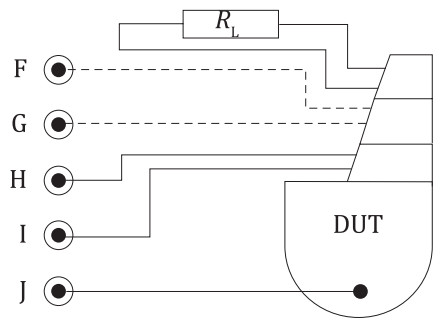

Figure 24 — Common mode connection for multichannel bipolar devices

Differential mode performance shall be tested using the test signal reduced to one-tenth amplitude. Sensing/pacing channels shall be tested in turn. The sense/pace terminals of the channel under test shall be connected between the coupled outputs H and I and output J of the tissue equivalent interface (as shown in Figure 25).

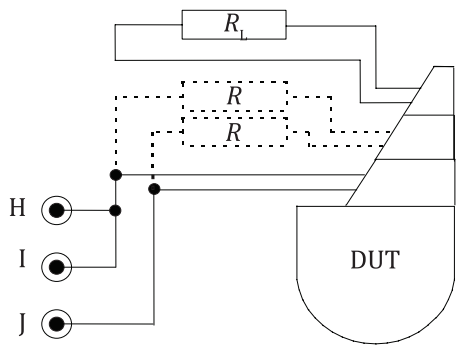

Figure 25 — Differential mode connection for multichannel bipolar devices

© ISO 2019 – All rights reserved
AVA Documents Document Sharing Hub
Full document details: BS ISO 14117:2019

Compliance shall be confirmed if, after application of the specified test signals, the DUT functions as it did before the test without further adjustment of the DUT.

4.3.3.1.3 Malfunction because of electromagnetic interference on the cardioversion/defibrillation terminals

Test procedure: Select the tissue-equivalent interface circuit specified by Figure D.3. The test signal generator shall be connected through input C of the interface circuit as shown in Figure 26. The test voltage shall be measured on the oscilloscope connected to test point D.

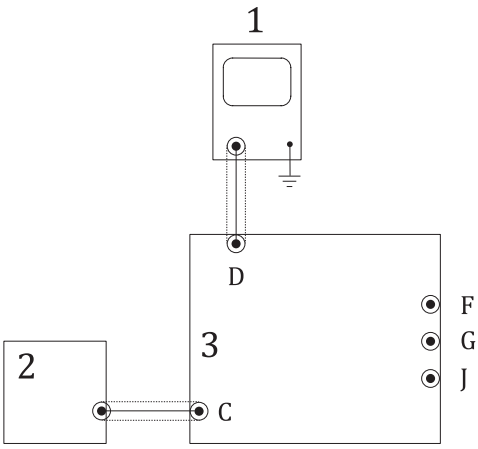

Key

1 oscilloscope

2 test signal generator

3 tissue equivalent interface

Figure 26 — Test setup to check for induced malfunction attributable to voltages induced on cardioversion/defibrillation terminals

The capacitor C_x of the interface circuit (see Figure D.3) shall be bypassed unless required to eliminate spurious low-frequency signals produced by the interference signal generator (see Annex E).

The sense/pace terminals shall be loaded with resistors R_L of 500 Ω ± 5 %. For a multichannel sensing/pacing device, the sense/pace terminals shall be connected through resistors R of ≥10 kΩ, as shown. The manufacturer shall be free to choose the value of the resistors that are appropriate for the device under test. If the DUT has more than two cardioversion/defibrillation terminals, the terminals not being tested shall be connected to one of the terminals under test through a resistor R ≥ 10 kΩ as specified by the manufacturer.

Common mode performance shall be tested with the cardioversion/defibrillation terminals connected to the outputs F and G of the tissue-equivalent interface (as shown in Figure 27) and the case connected to output J.

If the case of the DUT is an active terminal, no common mode test is required.

© ISO 2019 – All rights reserved

Documents
Document Sharing Hub
Full document details: BS ISO 14117:2019

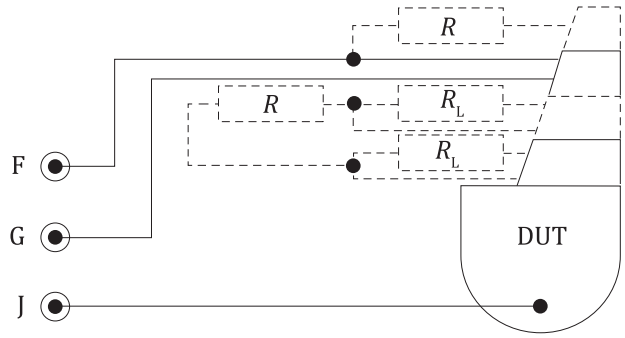

Figure 27 — Common mode connection for cardioversion/defibrillation terminals

Differential mode performance shall be tested with the cardioversion/defibrillation terminals connected between the coupled outputs F and G and output J of the tissue-equivalent interface (as shown in Figure 28).

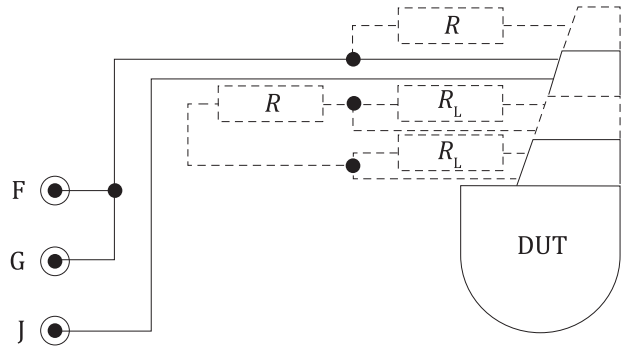

Figure 28 — Differential mode connection for cardioversion/defibrillation terminals

If the DUT has more than two cardioversion/defibrillation terminals, the tests shall be performed on each pair of terminals in turn.

Compliance shall be confirmed if, after application of the specified test signals, the DUT functions as it did before the test without further adjustment of the DUT.

4.3.3.2 Malfunction due to electromagnetic interference in the frequency range of 10 MHz to 385 MHz

4.3.3.2.1 Test equipment and signal

Test equipment: Use the test setup as shown in Figure 30, using the injection network specified by Figure D.5; an oscilloscope (#1), input impedance 50 Ω, accuracy of ±10 % within a bandwidth of at least 385 MHz; and a test signal generator, output impedance 50 Ω.

Test signal: The test signal shall be a modulated signal of the form as shown in Figure 29. The carrier shall be amplitude modulated with a 130 Hz sinusoidal wave to create modulation bursts of 100 ms duration. The burst-to-burst interval, *T*, shall be measured leading edge to leading edge (see Figure 29). The burst-to-burst interval, *T*, of the modulated signal shall be set to 700 ms ± 50 ms.

The peak-to-peak amplitude of the test signal, V_{pp}, cannot be measured directly at any connector of the injection network during the test. Therefore, it is calculated from the voltage at connector D, V_{osc}, by applying the calibration factor, *m*, of Annex F.

© ISO 2019 – All rights reserved
Documents
Document Sharing Hub
Full document details: BS ISO 14117:2019

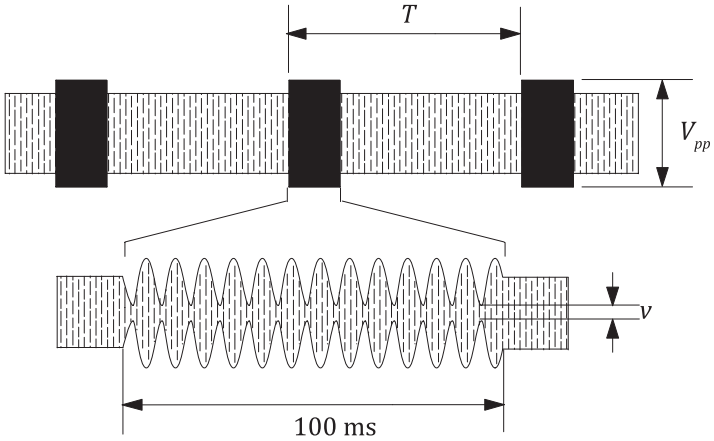

Figure 29 — Test signal for frequencies between 10 MHz and 385 MHz

The modulation bursts shall start and terminate at zero crossings of the modulation signal, thus the envelope starts and terminates continuously. The burst count is 13 complete modulation cycles. The modulation index, M, shall be 95 %, where:

$$M = \frac{V_{\text{pp}} - v}{V_{\text{pp}} + v} \times 100$$

The amplitude of the test signal (V_{pp}) is defined as the peak-to-peak amplitude of the open circuit voltage driving the implantable DUT at the outputs (F, G) of the injection network. The amplitude of the test signal, V_{pp}, shall be 14 V. Prior to testing the test set-up has to be calibrated using the procedure in Annex F.

4.3.3.2.2 Malfunction because of electrical interference on the sense or pace terminals

Test procedure: Prior to any testing, calibrate the setup using the procedure in Annex F. The test signal generator shall be connected to the injection network through input C as shown in Figure 30. The test signal generator shall be adjusted so that the test signal amplitude measured on the oscilloscope connected to monitoring point D (V_{osc}) when multiplied by the calibration factor for the injection network, determined according to the method of Annex F, is equal to the required test signal amplitude, V_{pp}, of 14 V. The test signal shall be applied at a minimum of six distinct, well-spaced frequencies per decade, beginning at 10 MHz and ending at 385 MHz (i.e. 10, 20, 40, 60, 80, 100, 200, 385) with an evenly distributed dwell time of at least 60 s per decade.

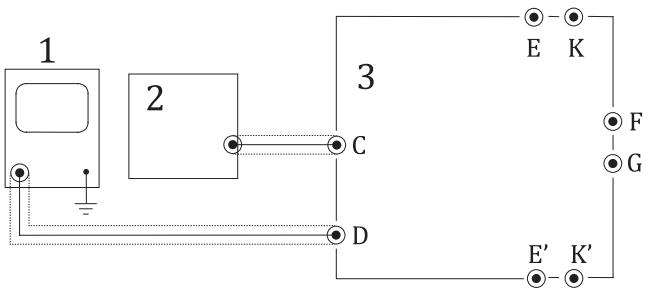

Key

1 oscilloscope

2 test signal generator

3 injection network

Figure 30 — Test set-up to check for induced malfunction at high frequency

© ISO 2019 – All rights reserved

Documents
Document Sharing Hub
Full document details: BS ISO 14117:2019

The peak-to-peak amplitude of the test signal, V_{pp}, cannot be measured directly at any connector of the injection network during the test. Therefore, it is calculated from the voltage at connector D, V_{osc}, by applying the calibration factor, *m*, of Annex F.

Connections between outputs F and G and the implantable DUT shall be made with copper straps, width ≥5 mm, length ≤50 mm (not including the length of the standard connector pin inserted into the device header). Unused RF ports (F and G) on the injection network shall be fitted with 50 Ω terminations.

a) A DUT with bipolar sensing/pacing shall be connected to outputs F and G of the injection network (as shown in Figure 31), using appropriate RF techniques for all connections. Each channel of a multichannel device shall be tested in turn and any channel not under test shall be turned off and loaded with 500 Ω load resistors (R_L). For safety, cardioversion/defibrillation terminals are loaded with high-voltage 50 Ω, 25 W resistors, R'_L as required by the HV therapy configuration.

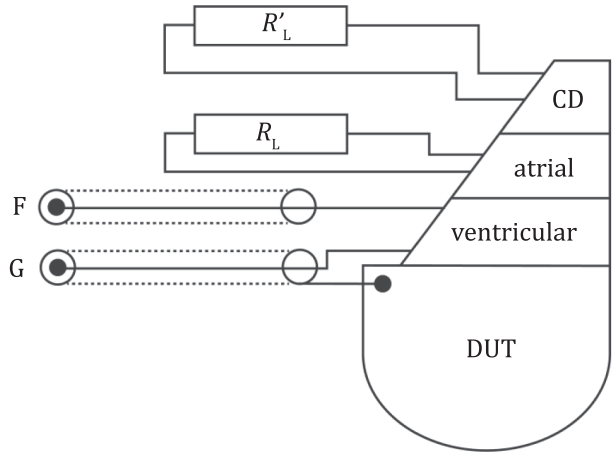

Figure 31 — Connection of the DUT

b) For a DUT which uses signals from both sense and cardioversion/defibrillation leads for arrhythmia detection, the manufacturer shall provide details of the test method.

Compliance shall be confirmed if, after application of the specified test signals, the DUT functions as prior to the test without further adjustment.

4.3.3.2.3 Malfunction because of electromagnetic interference on the cardioversion/defibrillation terminals

Test procedure: Testing is performed as specified in 4.3.3.2.2 with the cardioversion/defibrillation terminals under test connected to the output F and G of the injection network (instead of the pacing/sensing terminals, as shown in Figure 31). Any sensing/pacing channel shall be loaded with 500 Ω load resistors (R_L) and any cardioversion/defibrillation terminals not under test shall be loaded with high-voltage 50 Ω, 25 W resistors, R_L.

Compliance shall be confirmed if, after application of the specified test signals, the DUT functions as prior to the test without further adjustment.

4.3.3.3 Malfunction due to electromagnetic interference in the frequency range of 385 MHz to 3 000 MHz

Test: the DUT shall be subjected to the test procedure of 4.9.3.2 “optional characterization” of this document (without device monitoring and recording of DUT performance which is not required for this test).

Compliance shall be confirmed if the DUT functions as it did before the test without further adjustment.

© ISO 2019 – All rights reserved
Documents
Document Sharing Hub
Full document details: BS ISO 14117:2019

4.4 Protection from malfunction caused by temporary exposure to CW sources

4.4.1 *Pacemaker* and *CRT-P* device response to temporary continuous wave sources in the frequency range 16,6 Hz to 167 kHz

*Pacemaker*s and *CRT-P* devices that provide pacing therapy shall be constructed so that temporary exposure to ambient CW EM fields is unlikely to cause malfunction of the pacing therapy provided by the DUT.

Test equipment: Use the tissue-equivalent interface circuit specified by Figure D.2 and two oscilloscopes, input impedance nominal 1 MΩ, <30 pF, The oscilloscope connected to test point D in Figure 32 shall have an accuracy of ±10 % within a bandwidth of at least 20 MHz; an inhibition signal generator, output impedance not greater than 1 kΩ that provides a simulated heart signal in the form specified by Figure J.1; and a test signal generator, output impedance 50 Ω.

Test signal: The test signal shall be a continuous sinusoidal signal applied at a minimum of four distinct, well-spaced frequencies per decade between 16,6 Hz to 167 kHz. For bipolar common mode and unipolar mode tests, at each selected frequency, the test signal shall be slowly increased from zero to a maximum of 1 V peak-to-peak. The total time during which the test signal amplitude is increased from zero to its maximum shall not be less than four preset intervals. At the conclusion of testing at each frequency, the test signal amplitude shall be returned to zero.

Bipolar differential mode performance shall be tested using the test signal reduced to one-tenth amplitude (maximum of 0,1 V peak-to-peak).

The test frequencies of 16,6 Hz, 50 Hz, 60 Hz and 100 Hz shall be included in the set of predetermined test frequencies.

Test procedure: The test signal generator shall be connected through input C of the interface circuit as shown in Figure 32. The test signal shall be measured on the oscilloscope connected to monitoring point D of the interface circuit. The operation of the *pacemaker* is recorded on the oscilloscope connected to monitoring point K. If the DUT is programmable to both unipolar and bipolar sensing polarity, the device shall be tested in both sensing polarities.

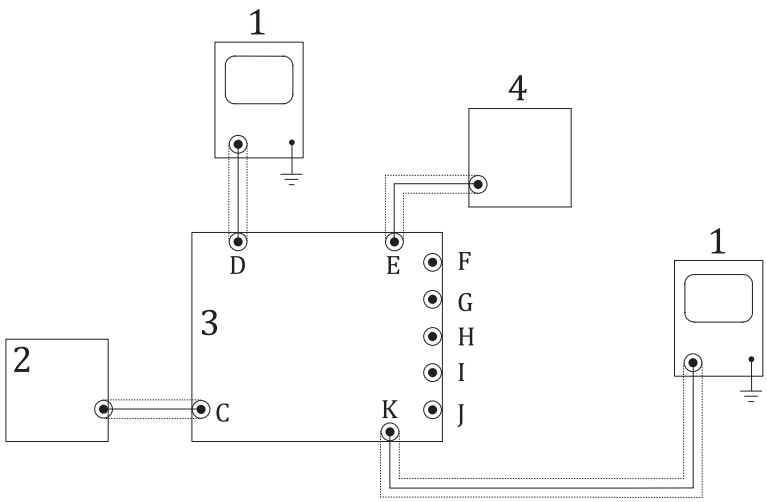

Key

1 oscilloscope
2 test signal generator
3 tissue equivalent interface
4 inhibition generator

Figure 32 — Test setup to characterize DUT performance while subject to interference

© ISO 2019 – All rights reserved

Documents
Document Sharing Hub
Full document details: BS ISO 14117:2019

Devices might allow for a number of fixed pacing sensitivity settings. For this subclause, the manufacturer may perform the test using one or multiple sensitivity settings, and in any order. However, the testing shall be used to identify any *permanently programmable sensitivity* settings not meeting the conformity criteria of this subclause. Those settings that result in non-conforming test results shall be disclosed in accordance with 7.1.

For devices that use automatic gain control, the manufacturer should provide details of the test method.

Other parameters shall be programmed to values that enable the person conducting the test to observe the point when the test signal is detected by the DUT.

When it is possible to distinguish between the uninfluenced and *interference mode* of operation the test shall be performed with the DUT in the pacing mode. If testing is performed in pacing mode, the test point E of the interface shall be connected to the signal ground (as shown in Figure 13).

When it is not possible to distinguish between the uninfluenced and *interference mode* of operation the test shall be performed with the DUT in synchronized mode. If testing is performed in synchronized mode, the DUT shall be synchronized by a signal from the inhibition signal generator connected to test point E of the interface (as shown in Figure 32). The amplitude of the inhibition signal shall be set at twice the value that just synchronizes the DUT under test and the interval shall be 800 ms or 90 % of the programmed basic pulse interval as shipped, whichever is the shorter. While determining the required amplitude for the inhibition signal, the test signal shall not be applied.

If tests are performed in DDD mode, then only tests of ventricular pacing need to be performed.

Testing in both AAI and VVI mode in lieu of DDD mode is allowed.

The *pacemaker* shall be categorized into one of four groups as required in 4.3.2 and connected to the tissue-equivalent interface according to Figure 14, Figure 15, Figure 16 and Figure 17, Figure 18 or Figure 19, as applicable. Only the ventricular channel needs to be tested when the DUT is programmed to dual-chamber operation; any other terminal of the DUT shall be connected to the equivalent terminal through a resistor of value $R \geq 10$ kΩ, as shown or specified by the manufacturer.

Compliance shall be confirmed when:

a) either the *pacemaker* continues to operate as set while the test conditions are varied as required; or

b) for pacing devices incorporating a defined *interference mode*:

   if while increasing the test signal amplitude the DUT transitions from its set mode to its *interference mode* when the test signal amplitude is increased by no more than 6 dB, or;

   if while increasing the test signal amplitude the DUT transitions from its set mode to its *interference mode*, the time between either

   — delivery of a pacing pulse, or

   — inhibition of pacing due to sensing of the simulated heart signal,

   is no more than two preset intervals.

If the test signal amplitude required to enter *interference mode* exceeds the maximum required test amplitude (1 Volt for bipolar common mode/unipolar mode; 0,1 Volt for bipolar differential mode), then the transition to *interference mode* does not need to be verified; and

when the test signal amplitude is returned to zero, the device shall return to its set mode, and during this transition, the time interval between either delivery of a pacing pulse, or inhibition of pacing due to sensing of the simulated heart signal, is no more than two pre-set intervals.

© ISO 2019 – All rights reserved
Documents
Document Sharing Hub
Full document details: BS ISO 14117:2019

For all *permanently programmable sensitivity* settings for which conformity criteria (a) or (b) cannot be achieved, the manufacturer shall provide a warning in accordance with 7.1.

NOTE *Interference mode* is intended for short-term operation for periods of seconds and is not intended for routine long-term operation. Such short-term operation is recognized as being clinically acceptable, with the risk of adverse events increasing with time of exposure.

4.4.2 *ICD*s and *CRT-D* devices

The manufacturer shall characterize the performance of *ICD*s and *CRT-D* devices in the presence of ambient CW EM fields.

The DUT shall be tested without simulated heart signal applied, unless the heart signal is needed to distinguish between uninfluenced mode and *interference mode* of operation.

NOTE *Interference mode* is intended for short-term operation for periods of seconds and is not intended for routine long-term operation. Such short-term operation is recognized as being clinically acceptable, with the risk of adverse events increasing with time of exposure.

Test equipment: Use the tissue-equivalent interface circuit specified by Figure D.2; two oscilloscopes, input impedance nominal 1 MΩ, with the oscilloscope connected to test point D in Figure 32 shall have an accuracy of ±10 % within a bandwidth of at least 20 MHz; an inhibition signal generator, output impedance not greater than 1 kΩ, that provides a simulated heart signal in the form specified by Figure J.1; and a test signal generator, output impedance 50 Ω. The capacitor C_x of the interface circuit (in Figure D.2) shall be bypassed unless required to eliminate spurious low-frequency signals produced by the interference signal generator (see Annex E).

Test signal: The test signal shall be a continuous sinusoidal signal applied at a minimum of four distinct, well-spaced frequencies per decade between 16,6 Hz to 167 kHz. For common mode tests, at each selected frequency the test signal shall be slowly increased from zero to a maximum of 1 V peak-to-peak.

Differential mode performance shall be tested using the test signal reduced to one-tenth amplitude (maximum of 0,1 V peak-to-peak).

The test voltage need not be increased further once the DUT begins to detect the test signal.

The test frequencies of 16,6 Hz, 50 Hz, 60 Hz and 100 Hz shall be included in the set of predetermined test frequencies.

Test procedure: The test signal generator shall be connected through input C of the interface circuit, as shown in Figure 32. The test voltage shall be measured on the oscilloscope connected to test point D of the interface circuit.

The DUT shall be set to its *maximum permanently programmable sensitivity*. Other parameters shall be programmed to values that enable the person conducting the test to observe the point at which the test signal is detected by the implantable DUT.

The test shall be performed with the DUT in the pacing mode and in a synchronized mode when it is not possible to distinguish between uninfluenced mode and *interference mode* of operation.

For a multichannel DUT, any sense/pace terminals not being tested are connected through resistors of ≥10 kΩ to the corresponding terminals of the channel under test. The manufacturer is free to choose the value of the resistors that is appropriate to the device under test. For safety reasons, the cardioversion/defibrillation terminals are loaded with high-voltage 50 Ω (25 W) resistors. The operation of the DUT shall be monitored by the oscilloscope connected to test point K.

A DUT with bipolar sensing/pacing shall be tested in two configurations.

Common mode performance shall be tested with the sense/pace terminals connected to the outputs F, G, H, and I (as shown in Figure 24) of the tissue-equivalent interface (as shown in Figure D.2) and the case connected to output J.

© ISO 2019 – All rights reserved

Documents
Document Sharing Hub
Full document details: BS ISO 14117:2019

Differential mode performance shall be tested using the test signal reduced to one-tenth amplitude. The sense/pace terminals of the channel under test shall be connected between the coupled outputs H and I and the output J (as shown in Figure 25) of the tissue-equivalent interface (as shown in Figure D.2).

For each predetermined test frequency, record the amplitude of the test signal (voltage) when the DUT begins to detect the test signal.

Allow for testing in both AAI and VVI mode in lieu of DDD mode; see Annex I for testing modes.

If the manufacturer's nominal (as shipped) sensitivity setting is less sensitive than *maximum permanently programmable sensitivity*, the DUT shall be reprogrammed to the nominal sensitivity setting, and the entire test sequence shall be repeated. A report containing the results of the characterization testing specified in this subclause shall be prepared.

Compliance shall be confirmed by inspection of the manufacturer's test report.

4.5 Protection from sensing EMI as cardiac signals

4.5.1 General requirements

The DUT shall be constructed so that commonly encountered EM fields are unlikely to change the therapeutic behaviour of the DUT.

NOTE Dual-chamber devices can be tested in VVI and AAI modes or in lieu of DDD mode.

Sensitivity settings during test (all device types): the DUT might allow for a number of fixed sensitivity settings. Where both unipolar and bipolar sensing are available, both modes should be tested. For this subclause, the manufacturer may perform the test using one or multiple sensitivity settings, and in any order. However, the testing shall be used to identify any *permanently programmable sensitivity* settings that do not, or would not, meet the conformity criteria of this subclause.

For devices that have automatic gain control in addition to fixed programmed sensitivities, testing of the automatic gain control mode shall be optional. Where only automatic gain control is available, that mode shall be tested and the manufacturer shall provide details of the test method.

***Pacemakers* and *CRT-Ps*:** For frequencies above 1 kHz, the least sensitive settings acceptable for compliance are 2,0 mV sensitivity in the unipolar sensing mode and 0,3 mV sensitivity in the bipolar sensing mode, or the sensitivity as shipped, whichever is the more sensitive.

The DUT shall be tested with and without a simulated heart signal. It is essential to determine when the device responds to EMI. Therefore, device parameters shall be programmed so that it is possible to discriminate when the device is influenced by EMI. When testing with the simulated heart signal, the generator output shall be set to amplitude of twice the value that just inhibits the *pacemaker*. The interval of the inhibition signal shall be 800 ms or 90 % of the programmed basic pulse interval as shipped, whichever is shorter.

***ICDs* and *CRT-Ds*:** The arrhythmia detection interval shall be programmed to a value greater than the initial burst-to-burst interval of 350 ms ± 25 ms. For frequencies above 1 kHz, the least sensitive setting acceptable for compliance is 0,3 mV sensitivity, or the sensitivity as shipped, whichever is the more sensitive.

CAUTION — These tests can produce high-voltage shocks. Failure to use safe laboratory practices can result in severe electrical shock, resulting in personal injury or death to the persons handling the equipment or conducting the test.

© ISO 2019 – All rights reserved
Documents
Document Sharing Hub
Full document details: BS ISO 14117:2019

4.5.2 Protection from sensing EMI as cardiac signals in the frequency range of 16,6 Hz to 150 kHz

4.5.2.1 *Pacemakers* and *CRT-P* devices

Test equipment: Use the tissue-equivalent interface circuit specified by Figure D.2; two oscilloscopes, input impedance nominal 1 MΩ, <30 pF. The oscilloscope connected to output D of the interface circuit shall have a bandwidth of at least 20 MHz; an inhibition signal generator, output impedance not greater than 1 kΩ, that provides a signal of the form specified by Figure J.1; and a test signal generator, output impedance of 50 Ω.

Test signal:

Test signal 1: the test signal shall be a continuous sinusoidal wave, with a frequency, *f*, between 16,6 Hz and 1 kHz with peak-to-peak amplitude as shown in Table 6.

The test frequencies of 16,6 Hz, 50 Hz, 60 Hz and 100 Hz shall be included in the set of predetermined test frequencies.

Test signal 2: the test signal shall be a burst modulated signal as described below, carrier frequency, *f*, between 1 kHz and 150 kHz with peak-to-peak amplitudes as shown in Table 6.

The amplitude of the test signal (V_{pp}) is defined as the peak-to-peak amplitude of the open-circuit voltage driving the *pacemaker* at the outputs of the tissue-equivalent interface. The amplitude of the test signal, V_{pp}, for the unipolar test and the bipolar common mode test shall be a function of the carrier frequency *f*, as specified by Table 6.

Table 6 — Peak-to-peak amplitudes V_{pp} in the range of 16,6 Hz to 150 kHz

f	V_{pp}
16,6 Hz ≤ f ≤ 1 kHz	2 mV
1 kHz ≤ f ≤ 3 kHz	2 mV × (f / 1 kHz)^2
3 kHz ≤ f ≤ 150 kHz	6 mV × (f / 1 kHz)

Bipolar differential mode performance shall be tested using test signal reduced to one-tenth amplitude of the common mode test.

Test signal 2 modulation: the carrier shall be switched to create bursts of approximately 100 ms duration. The burst-to-burst interval, *T*, shall be measured leading edge to leading edge (see Figure 33). The burst shall start and terminate at a zero crossings of the carrier, and only complete carrier cycles shall be used (true gated signal). The burst-to-burst interval, T, shall be set to 700 ms ± 50 ms.

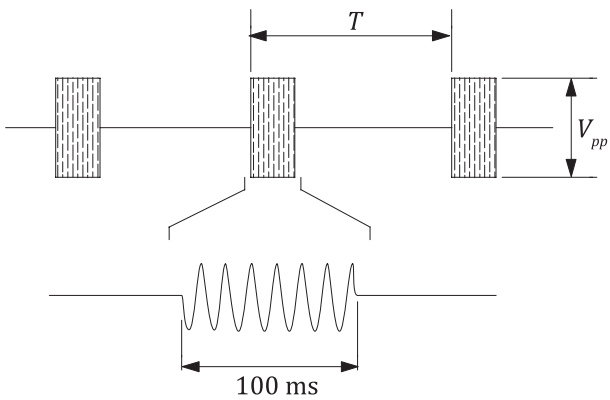

Figure 33 — Test signal 2: Used in the range of 1 kHz to 150 kHz

Test procedure: The test signal generator shall be connected to the tissue-equivalent interface circuit through input C, as shown in Figure 32. The test signal shall be measured on the oscilloscope connected

© ISO 2019 – All rights reserved

Documents
Document Sharing Hub
Full document details: BS ISO 14117:2019

to monitoring point D. The operation of the DUT shall be recorded on the oscilloscope connected to monitoring point K.

NOTE 1 Two tests are performed: one with and one without simulated heart signal applied to input E.

The capacitor C_x of the interface circuit (see Figure D.2) shall be bypassed unless required to eliminate spurious low-frequency signals produced by the interference signal generator (see Annex E).

The test signals as defined above shall be applied at a minimum of four distinct, well-spaced frequencies per decade between 16,6 Hz and 150 kHz, with an evenly distributed dwell time of at least 60 s per decade. (V_{pp} can be measured directly at connector D of the tissue-equivalent interface.)

Care should be taken that the interference generator itself does not produce low-frequency components.

When the DUT is synchronized by the inhibition signal generator, the inhibition signal generator shall be set without the modulated test signal being applied.

If the DUT is a multichannel device, it should be programmed to minimize the occurrence of possible cross-talk between channels.

The DUT shall be categorized into one of four groups, as required in 4.3.2, and connected to the tissue-equivalent interface according to Figures 14 to 19, as applicable.

For each tested frequency, the operation of the DUT shall be observed and recorded as either functioning in its set mode or not.

Compliance for the sensitivity tested shall be confirmed if the DUT at all times functions in its set mode, both with and without the simulated heart signal applied by the inhibition signal generator and irrespective of the application of the required test signal.

For those sensitivity settings of the DUT for frequencies up to 1 kHz, at which a change of pacing pattern occurs, compliance shall be confirmed if a warning and disclosure is provided according to 7.1.

4.5.2.2 *ICDs* and *CRT-D* devices

Test equipment: use the tissue-equivalent interface circuit specified by Figure D.2; two oscilloscopes, input impedance nominal 1 MΩ, <30 pF.The oscilloscope connected to test point D in Figure D.2 shall have an accuracy of ±10 % within a bandwidth of at least 20 MHz; an inhibition signal generator, output impedance not greater than 1 kΩ, that provides a simulated heart signal in the form specified by Figure J.1; and test signal generators, output impedance of 50 Ω.

The amplitude of the simulated heart signal shall be approximately twice the minimum value required for detection by the DUT. The simulated heart signal generator shall be connected through input E of the interface circuit.

The capacitor C_x of the interface circuit (see Figure D.2) shall be bypassed unless required to eliminate spurious low-frequency signals produced by the interference signal generator (see Annex E).

Test signal 1: the test signal shall be a continuous sinusoidal wave, with a frequency, *f*, between 16,6 Hz and 1 kHz with peak-to-peak amplitude as shown in Table 7.

The test frequencies of 16,6 Hz, 50 Hz, 60 Hz and 100 Hz shall be included in the set of predetermined test frequencies.

Test signal 2: the test signal shall be a burst modulated signal as described below, carrier frequency, *f*, between 1 kHz and 150 kHz with peak-to-peak amplitudes as shown in Table 7.

The amplitude of the common mode test signal, V_{pp}, is defined as the peak-to-peak amplitude of the open-circuit voltage driving the *pacemaker* at the outputs of the tissue-equivalent interface. The amplitude of the test signal, V_{pp}, shall be a function of the carrier frequency, *f*, as specified by Table 7.

© ISO 2019 – All rights reserved
Documents
Document Sharing Hub
Full document details: BS ISO 14117:2019

Table 7 — Peak-to-peak amplitudes V_{pp} in the range of 16,6 Hz to 150 kHz

f	V_{pp}
16,6 Hz ≤ f ≤ 1 kHz	2 mV
1 kHz ≤ f ≤ 3 kHz	2 mV × (f / 1 kHz)^2
3 kHz ≤ f ≤ 150 kHz	6 mV × (f / 1 kHz)

Differential mode performance shall be tested using test signal reduced to one-tenth amplitude.

Test signal 2 modulation: the carrier shall be switched to create bursts of approximately 100 ms duration. The burst-to-burst interval, *T*, shall be measured leading edge to leading edge (see Figure 34). The burst shall start and terminate at zero crossings of the carrier, and only complete carrier cycles shall be used (true gated signal).

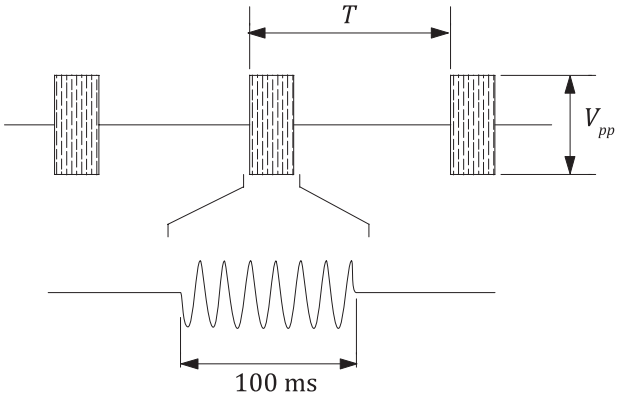

Figure 34 — Test signal 2: Used in the range of 1 kHz to 150 kHz

Test procedure: Two possible disruptions of normal operation of the device by the interference are considered: a false positive, in which case the EMI is mistaken for an arrhythmia that needs to be treated, and a false negative, in which case the EMI prohibits the sensing of an arrhythmia and the needed therapy is withheld. The false-positive case is tested with a burst-to-burst interference interval, *T*, simulating fibrillation and with both a simulated heart signal at a normal sinus rate, T_{shs}, and without a simulated heart signal. The false-negative case need not be tested, as sensing of interference signal is implicitly tested.

The test signals defined above shall be applied at a minimum of four distinct, well-spaced frequencies per decade between 16,6 Hz and 150 kHz with an evenly distributed dwell time of at least 60 s per decade. (V_{pp} can be measured directly at connector D of the tissue-equivalent interface.)

Test 1: Simulated heart signal applied with T_{shs} = 800 ms (or 90 % of basic pulse interval, whichever is less) and burst-to-burst interval of interference signal set to T = 350 ± 25 ms.

NOTE 1 The test setup of Test 1 seeks to determine if the modulated interference will influence the *ICD* during inhibited mode of operation. The burst-to-burst interval, *T*, is selected to simulate fibrillation.

Test 2: No simulated heart signal applied and burst-to-burst interval of interference signal set to T = 350 ± 25 ms.

NOTE 2 The test setup of Test 2 seeks to determine if the detection of the modulated interference will prevent the *ICD* from providing bradycardia therapy. The burst-to-burst interval, *T*, is selected to simulate fibrillation.

Any sense/pace terminals not being tested are connected through resistors of ≥10 kΩ to the corresponding terminals of the channel under test. The manufacturer is free to choose the value of the resistors that is appropriate to the device under test. For safety reasons, the cardioversion/defibrillation terminals are loaded with high-voltage 50 Ω (25 W) resistors.

© ISO 2019 – All rights reserved

Documents
Document Sharing Hub
Full document details: BS ISO 14117:2019

The operation of the DUT shall be monitored by the oscilloscope connected to test point K. The applicable tests described in list items a) and b) below shall be performed at a minimum of four carrier frequencies per decade.

Since the DUT might require that it detect several consecutive input signals before therapy is initiated, sufficient time should be allowed at each frequency tested for the DUT to react to the input interference.

a) DUTs with bipolar sensing shall be tested in two configurations, as follows.

   Common mode performance shall be tested with the sense/pace terminals connected to the outputs F, G, H, and I (as shown in Figure 24) of the tissue-equivalent interface (as shown in Figure D.2) and the case connected to output J.

   Differential mode performance shall be tested using the test signal reduced to one-tenth amplitude. The sense/pace terminals of the channel under test shall be connected between the coupled outputs H and I and the output J (as shown in Figure 25) of the tissue-equivalent interface (as shown in Figure D.2).

   If the DUT is a multichannel device, it should be programmed to minimize the occurrence of possible cross-talk between channels.

b) For DUTs that use signals from both sense and cardioversion/defibrillation leads for arrhythmia detection, the manufacturer shall provide details of the test method.

   For each tested frequency, the results of Test 1 and Test 2 shall be observed and recorded as influenced or not.

Compliance for the sensitivity being tested shall be confirmed if:

— while Test 1 is performed, the DUT is not influenced by the interference signal (i.e. it does not exhibit any pacing pulses and does not deliver a tachyarrhythmia therapy); and

— while Test 2 is performed, the DUT is not influenced by the interference signal (i.e. it does not exhibit any deviation in pace-to-pace interval that exceeds 10 % of the programmed rate and does not deliver a tachyarrhythmia therapy).

For those sensitivity settings of the DUT for frequencies up to 1 kHz at which influenced behaviour is observed, compliance shall be confirmed if an appropriate warning and disclosure is provided according to 7.1.

4.5.3 Protection from sensing EMI as cardiac signals in the frequency range of 150 kHz to 10 MHz

4.5.3.1 *Pacemakers* and *CRT-P* devices

Test equipment: use the test equipment specified in 4.5.2.1 of this document.

Test signal: the test signal shall be a modulated signal, carrier frequency f, between 150 kHz and 10 MHz. The carrier shall be amplitude modulated with a 130 Hz sinusoidal wave to create modulation bursts of 100 ms duration. The burst-to-burst interval, T, shall be measured leading edge to leading edge (see Figure 35).

© ISO 2019 – All rights reserved
Documents
Document Sharing Hub
Full document details: BS ISO 14117:2019

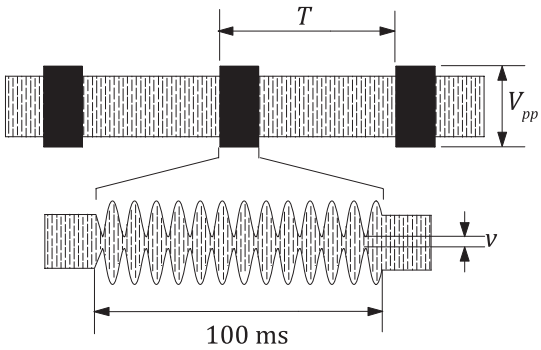

Figure 35 — Test signal for frequencies 150 kHz to 10 MHz

The modulation bursts shall start and terminate at zero crossings of the modulation signal (thus the envelope starts and terminates at a value of approximately 50 % of the unmodulated carrier). The burst counts 13 complete modulation cycles. The modulation index, *M*, shall be 95 %, where:

$$M = \frac{V_{\text{pp}} - v}{V_{\text{pp}} + v} \times 100$$

The burst-to-burst interval, *T*, of the test signal shall be set to 700 ms ± 50 ms.

The amplitude of the test signal (V_{pp}) is defined as the peak-to-peak amplitude of the open circuit voltage driving the *pacemaker* at the outputs of the tissue-equivalent interface. The amplitude of the test signal, V_{pp}, for unipolar test and bipolar common mode test shall be a function of the carrier frequency, *f*, as specified by Table 8.

Table 8 — Peak-to-peak test signal amplitudes V_{pp} in the range of 150 kHz to 10 MHz

f	V_{pp}
150 kHz ≤ f ≤ 167 kHz	6 mV × (f/1 kHz)
167 kHz ≤ f ≤ 1 MHz	1 V
1 MHz ≤ f ≤ 10 MHz	1 V × (f/1 MHz)

Bipolar differential mode performance shall be tested using test signal reduced to one-tenth amplitude of the common mode test.

Test procedure: the modulated signal shall be applied at a minimum of four distinct, well-spaced frequencies per decade between 150 kHz and 10 MHz, with an evenly distributed dwell time of at least 60 s per decade. (V_{pp} can be measured directly at connector D of the tissue-equivalent interface.) The test configuration and procedure shall be otherwise as required in 4.5.2.1.

Compliance for the sensitivity being tested shall be confirmed if the DUT at all times functions in its set mode, irrespective of the application of the required modulated test signal.

4.5.3.2 *ICDs* and *CRT-D* devices

Test equipment: use test equipment specified in 4.5.2.2.

The capacitor C_{x} of the interface circuit (see Figure D.2) shall be bypassed unless required to eliminate spurious low-frequency signals produced by the interference signal generator (see Annex E).

Test signal: the test voltage for common mode shall be a modulated signal, carrier frequency, *f*, between 150 kHz and 10 MHz, as in Table 9.

© ISO 2019 – All rights reserved

Documents
Document Sharing Hub
Full document details: BS ISO 14117:2019

Table 9 — Peak-to-peak test signal amplitudes V_{pp} in the range of 150 kHz to 10 MHz

f	V_{pp}
150 kHz ≤ f ≤ 167 kHz	6 mV × (f / 1 kHz)
167 kHz ≤ f ≤ 1 MHz	1 V
1 MHz ≤ f ≤ 10 MHz	1 V × (f / 1 MHz)

Differential mode performance shall be tested using a test signal reduced to one-tenth amplitude of the common mode test.

The carrier shall be amplitude modulated with a 130 Hz sinusoidal wave to create modulation bursts of 100 ms duration. The burst-to-burst interval, *T*, shall be measured leading edge to leading edge (see Figure 36).

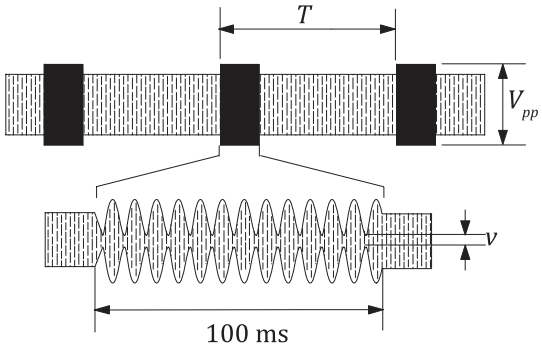

Figure 36 — Test signal for frequencies 150 kHz to 10 MHz

The modulation bursts shall start and terminate at zero crossings of the modulation signal (thus, the envelope starts and terminates at a value of approximately 50 % of the unmodulated carrier). The burst count is 13 complete modulation cycles. The modulation index, *M*, shall be 95 %, where:

$$M = \frac{V_{pp} - v}{V_{pp} + v} \times 100$$

The test signal generator shall be connected through input C of the interface circuit as shown in Figure 21. The test voltage shall be measured on the oscilloscope connected to test point D of the interface circuit.

Test procedure: two possible disruptions of normal operation of the device by the interference are considered: a false positive, in which case the EMI is mistaken for an arrhythmia that needs to be treated, and a false negative, in which case the EMI prohibits the sensing of an arrhythmia and the needed therapy is withheld. Only one of these possible disruptions is tested. The false-positive case is tested with a burst-to-burst interference interval, *T*, simulating fibrillation and with both a simulated heart signal at a normal sinus rate, T_{shs}, and without a simulated heart signal. The false-negative case need not be tested, as sensing of interference signal is implicitly tested.

This setup tests for the detection of the modulated interference as an arrhythmia in the presence of a normal sinus rhythm (i.e. a false positive). The burst-to-burst interval, *T*, is selected to simulate a fibrillation, which can be detected by the device.

Test 1: Simulated heart signal applied with T_{shs} = 800 ms (or 90 % of basic pulse interval, whichever is less) and burst-to-burst interval of interference signal set to T = 350 ± 25 ms. The amplitude of the simulated heart signal shall be approximately twice the minimum value required for detection by the DUT. The simulated heart signal generator shall be connected through input E of the interface circuit.

NOTE 1 The test setup of Test 1 seeks to determine if the modulated interference will influence the DUT during inhibited mode of operation. The burst-to-burst interval, *T*, is selected to simulate fibrillation.

© ISO 2019 – All rights reserved
Documents
Document Sharing Hub
Full document details: BS ISO 14117:2019

Test 2: No simulated heart signal applied and burst-to-burst interval of interference signal set to T = 350 ± 25 ms.

NOTE 2 The test setup of Test 2 seeks to determine if the detection of the modulated interference will prevent the DUT from providing bradycardia therapy. The burst-to-burst interval, *T*, is selected to simulate fibrillation.

Any sense/pace terminals not being tested are connected through resistors of ≥10 kΩ to the corresponding terminals of the channel under test. The manufacturer is free to choose the value of the resistors that is appropriate to the device under test. For safety reasons, the cardioversion/defibrillation terminals are loaded with high-voltage 50 Ω (25 W) resistors.

The operation of the implantable DUT shall be monitored by the oscilloscope connected to test point K. The applicable tests described in list items a) and b) shall be performed with the test signal either swept over the frequency range at a rate of 1 decade per minute or, applied at a minimum of four distinct, well-spaced frequencies per decade with an evenly distributed dwell time of at least 60 s per decade.

Since the implantable DUT might require that it detect several consecutive input signals before therapy is initiated, sufficient time is to be allowed at each frequency tested for the DUT to react to the input interference.

a) DUTs with bipolar sensing shall be tested in two configurations, as follows.

   Common mode performance shall be tested with sense/pace terminals connected to the outputs F, G, H, and I (as shown in Figure 24) of the tissue-equivalent interface (as shown in Figure D.2) and the case connected to output J.

   Differential mode performance shall be tested using the test signal reduced to one-tenth amplitude. The sense terminals of the channel under test shall be connected between the coupled outputs H and I and the output J (as shown in Figure 25) of the tissue-equivalent interface (as shown in Figure D.2).

   The implantable DUT shall be programmed to prevent cross-talk between channels.

b) For a DUT which uses signals from both sense and cardioversion/defibrillation leads for arrhythmia detection, the manufacturer shall provide details of the test method.

   For each carrier frequency, the results of Test 1 and Test 2 shall be observed and recorded as uninfluenced or not.

Compliance for the sensitivity being tested shall be confirmed if:

— while Test 1 is performed, the *DUT* is not influenced by the interference signal (i.e. it does not exhibit any pacing pulses and does not deliver a tachyarrhythmia therapy); and

— while Test 2 is performed, the *DUT* is not influenced by the interference signal (i.e. it does not exhibit any deviation in pace-to-pace interval that exceeds 10 % of the programmed rate and does not deliver a tachyarrhythmia therapy).

4.5.4 Protection from sensing EMI as cardiac signals in the frequency range of 10 MHz to 385 MHz

4.5.4.1 *Pacemakers* and *CRT-P* devices

Test equipment: use the injection network specified by Figure D.5; an oscilloscope (#1), input impedance 50 Ω, accuracy of ±10 % within a bandwidth of at least 385 MHz; an oscilloscope (#2), input impedance nominal 1 MΩ; an inhibition signal generator, output impedance not greater than 1 kΩ, which provides a simulated heart signal of the form specified by J1; and a test signal generator, output impedance 50 Ω.

Test signal: the test signal shall be a modulated signal of the form specified by 4.5.3.1 (see Figure 36). The modulated test signal shall be applied at a minimum of six distinct, well-spaced frequencies per

AVA Documents
Document Sharing Hub

© ISO 2019 – All rights reserved

Full document details: BS ISO 14117:2019

decade, beginning at 10 MHz and ending at 385 MHz (e.g. 10, 20, 40, 60, 80, 100, 200, 385), with an evenly distributed dwell time of at least 60 s per decade. The amplitude of the test signal (V_{pp}) is defined as the peak-to-peak amplitude of the open-circuit voltage driving the outputs (F, G) of the injection network. The amplitude of the test signal, V_{pp}, shall be 10 V.

The peak-to-peak amplitude of the test signal, V_{pp}, cannot be measured directly at any connector of the injection network during the test. Therefore, it is calculated from the voltage at connector D, V_{osc}, by applying the calibration factor, *m*, of Annex F.

Test procedure: Prior to any testing, calibrate the setup using the procedure in Annex F. The test signal generator shall be connected to the injection network through input C as shown in Figure 37 . The test signal generator shall be adjusted so that the test signal amplitude measured on oscilloscope #1 connected to monitoring point D (V_{osc}) when multiplied by the calibration factor for the injection network, determined according to the method of Annex F, is equal to the required test signal amplitude, V_{pp}.

Two tests are performed, one with and one without the simulated heart signal applied through the inhibition signal generator to input E (E′). The interval of the inhibition signal T_{shs} shall be set to 800 ms or 90 % of the programmed basic pulse interval as shipped, whichever is shorter. The burst-to-burst interval, *T*, of the modulated signal shall be set to 700 ms ± 50 ms.

If an rms voltmeter is used during calibration procedure and testing at monitoring point D, then the test value shall be 53 % of the calibration value, to provide a nominal modulated test amplitude of 10 V_{pp} (open circuit) at outputs F and G.

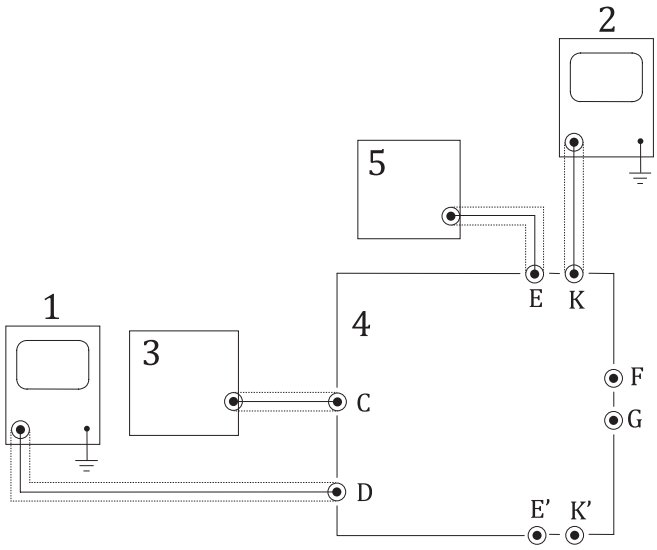

Key

1 oscilloscope #1
2 oscilloscope #2
3 test signal generator
4 injection network
5 inhibition generator

Figure 37 — Test setup to check for malfunction at high frequency

Connections between outputs F and G and the *pacemaker* shall be by copper straps, width ≥5 mm, length ≤50 mm (not including the length of the standard connector pin inserted into the device header). Unused RF ports (F and G) on the injection network shall be fitted with 50 Ω terminations ; in addition E′ and K′ shall be terminated with impedances equivalent to ports E and K, respectively, to keep the network balanced.

© ISO 2019 – All rights reserved
Documents
Document Sharing Hub
Full document details: BS ISO 14117:2019