BS ISO 14346:2013

BSI Standards Publication

Static design procedure for welded hollow-section joints — Recommendations

bsi.

...making excellence a habit.™

Document Sharing Hub

Full document details: BS ISO 14346:2013

National foreword

This British Standard is the UK implementation of ISO 14346:2013.

The UK participation in its preparation was entrusted to Technical Committee WEE/-/1, Briefing committee for welding.

A list of organizations represented on this committee can be obtained on request to its secretary.

This publication does not purport to include all the necessary provisions of a contract. Users are responsible for its correct application.

© The British Standards Institution 2013.
Published by BSI Standards Limited 2013.

ISBN 978 0 580 76015 0

ICS 25.160.40

Compliance with a British Standard cannot confer immunity from legal obligations.

This British Standard was published under the authority of the Standards Policy and Strategy Committee on 30 April 2013.

Amendments issued since publication

Date	Text affected

Documents
Document Sharing Hub

Full document details: BS ISO 14346:2013

INTERNATIONAL STANDARD

ISO 14346

First edition
2013-03-15

Static design procedure for welded hollow-section joints — Recommendations

Procédure statique de conception des joints soudés à section creuse — Recommandations

Reference number
ISO 14346:2013(E)

Documents
Document Sharing Hub

© ISO 2013

Full document details: BS ISO 14346:2013

COPYRIGHT PROTECTED DOCUMENT

© ISO 2013

All rights reserved. Unless otherwise specified, no part of this publication may be reproduced or utilized otherwise in any form or by any means, electronic or mechanical, including photocopying, or posting on the internet or an intranet, without prior written permission. Permission can be requested from either ISO at the address below or ISO's member body in the country of the requester.

ISO copyright office
Case postale 56 • CH-1211 Geneva 20
Tel. + 41 22 749 01 11
Fax + 41 22 749 09 47
E-mail copyright@iso.org
Web www.iso.org

Published in Switzerland

© ISO 2013 – All rights reserved

Documents
Document Sharing Hub

Full document details: BS ISO 14346:2013

Contents

Page

Foreword ... **v**

1 Scope ... **1**

2 Normative references ... **1**

3 Terms and definitions ... **1**

4 Symbols and abbreviated terms ... **2**

5 Requirements ... **5**

6 Materials ... **12**

7 Joint types ... **13**

8 Joint classification ... **19**

9 Limit states design ... **23**

10 Partial load and safety factors for loads and resistances ... **24**

11 Static design procedures ... **24**
11.1 General ... 24
11.2 Design member forces ... 24
11.3 Design resistance ... 24
11.4 Design criteria ... 25

12 Design member forces ... **25**
12.1 Analysis methods ... 25
12.2 Design member forces ... 26

13 Design criteria ... **26**
13.1 Failure modes ... 26
13.2 Uniplanar joints ... 26
13.3 Uniplanar overlap joints with a CHS, RHS, I- or H-section chord ... 28
13.4 Special uniplanar joints ... 29
13.5 Multiplanar joints ... 30

14 Design resistance of uniplanar CHS braces to CHS chord joints ... **30**
14.1 Design axial resistance ... 30
14.2 Design moment resistance ... 31

15 Design resistance of uniplanar gusset plates, I- or H-section braces or RHS braces to CHS chord joints ... **32**

16 Design resistance of multiplanar joints with CHS chord ... **33**

17 Design resistance of uniplanar RHS braces or CHS braces to RHS chord joints ... **34**
17.1 Design axial resistance ... 34
17.2 Design moment resistance ... 36

18 Design resistance of uniplanar SHS or CHS braces to SHS chord joints ... **37**
18.1 Design axial resistance ... 37
18.2 Design moment resistance ... 38

19 Design resistance of uniplanar gusset plate to RHS joints ... **38**

20 Design resistance of multiplanar joints with RHS chord ... **39**

21 Design resistance of uniplanar CHS or RHS braces to I- or H-section chord joints ... **40**
21.1 Design axial resistance ... 40
21.2 Design moment resistance ... 42

22 Design resistance of uniplanar overlap joints with a CHS, RHS, I- or H-section chord ... **42**

Annex A (informative) **Quality requirements for hollow sections** ... **46**

Documents
Document Sharing Hub

© ISO 2013 – All rights reserved

Full document details: BS ISO 14346:2013

Annex B (informative) **Weld details** **48**
Annex C (informative) **Partial safety factors on static strength** **50**
Bibliography **52**

© ISO 2013 – All rights reserved
Documents
Document Sharing Hub
Full document details: BS ISO 14346:2013

Foreword

ISO (the International Organization for Standardization) is a worldwide federation of national standards bodies (ISO member bodies). The work of preparing International Standards is normally carried out through ISO technical committees. Each member body interested in a subject for which a technical committee has been established has the right to be represented on that committee. International organizations, governmental and non-governmental, in liaison with ISO, also take part in the work. ISO collaborates closely with the International Electrotechnical Commission (IEC) on all matters of electrotechnical standardization.

International Standards are drafted in accordance with the rules given in the ISO/IEC Directives, Part 2.

The main task of technical committees is to prepare International Standards. Draft International Standards adopted by the technical committees are circulated to the member bodies for voting. Publication as an International Standard requires approval by at least 75 % of the member bodies casting a vote.

Attention is drawn to the possibility that some of the elements of this document may be the subject of patent rights. ISO shall not be held responsible for identifying any or all such patent rights.

ISO 14346 was prepared by the International Institute of Welding, which has been approved as an international standardizing body in the field of welding by the ISO Council.

Requests for official interpretations of any aspect of this International Standard should be directed to the ISO Central Secretariat, who will forward them to the IIW Secretariat for an official response.

© ISO 2013 – All rights reserved

Documents
Document Sharing Hub
Full document details: BS ISO 14346:2013

Documents
Document Sharing Hub

Full document details: BS ISO 14346:2013

INTERNATIONAL STANDARD ISO 14346:2013(E)

Static design procedure for welded hollow-section joints — Recommendations

1 Scope

This International Standard gives guidelines for the design and analysis of welded uniplanar and multiplanar joints in lattice structures composed of circular (CHS), square (SHS) or rectangular (RHS) hollow sections, and of uniplanar joints in lattice structures composed of combinations of hollow sections with open sections under static loading. This International Standard is applicable to CHS or RHS Y-, X- and K-joints and their multiplanar equivalents, gusset plate to CHS or RHS joints, open-section and RHS to CHS joints, and hollow-section to open-section joints.

2 Normative references

The following referenced documents are indispensable for the application of this document. For dated references, only the edition cited applies. For undated references, the latest edition of the referenced document (including any amendments) applies.

ISO 630 (all parts), *Structural steels*

ISO 14347, *Fatigue — Design procedure for welded hollow-section joints — Recommendations*

ISO/TR 25901, *Welding and related processes — Vocabulary*

3 Terms and definitions

For the purposes of this document, the terms and definitions given in ISO 14347, ISO/TR 25901, and the following apply.

3.1
chord face failure
chord plastification
plastic failure of the chord face or plastic failure of the chord cross-section

3.2
chord punching shear
crack initiation in a hollow-section chord wall leading to rupture of a brace member from the chord member

3.3
chord side wall failure
chord web failure
yielding, crushing or instability (crippling or buckling of the chord side wall or chord web) under the relevant brace member

3.4
cross-section classification
identification of the extent to which the resistance (to axial compression or bending moment) and rotation capacity of a cross-section are limited by its local buckling resistance

Note 1 to entry: For example, four classes are given in Eurocode 3 (see EN 1993-1-1) together with three limits on diameter-to-thickness ratio for CHS or width-to-thickness ratio for RHS.

© ISO 2013 – All rights reserved

Documents
Document Sharing Hub
Full document details: BS ISO 14346:2013

3.5
joint configuration
type or layout of the joint or joints in a zone within which the axes of two or more interconnected members or elements intersect

3.6
local chord member yielding
local buckling of the chord connecting face in an overlapped joint

3.7
local yielding of overlapping brace
local yielding of overlapping plate
local yielding of brace
local yielding of plate
cracking in the weld or in a brace member, or local buckling of a brace member with reduced effective width

3.8
multiplanar joint
in a lattice structure, a joint connecting members situated in more than one plane

3.9
structural properties of a joint
resistance to forces and moments in the connected members, deformation and/or rotation capacity

3.10
uniplanar joint
in a lattice structure, a joint connecting members situated in a single plane

4 Symbols and abbreviated terms

A_i cross-sectional area of member i (i = 0, 1, 2)

A_s shear area of a chord member

b_e effective width of a plate or RHS brace member

b_{ei} effective width of an overlapping RHS brace member at the chord connection

b_{ej} effective width of an overlapped RHS brace member at the chord connection

$b_{e,ov}$ effective width of an overlapping RHS brace member at the overlapped brace connection

$b_{e,p}$ effective width for punching shear

b_i overall out-of-plane width of a plate or RHS or I- or H-member i (i = 0, 1, 2)

b_w effective width for the web of an I- or H-section, or RHS side wall

C_1 coefficient used in the chord stress function Q_f as shown in Tables 2, 4, 6, and 9

c coefficient defined in Table 13

c_s coefficient for effective shear area

d_e effective width of a CHS brace member

d_{ei} effective width of an overlapping CHS brace member at the chord connection

d_{ej} effective width of an overlapped CHS brace member at the chord connection

© ISO 2013 – All rights reserved
Documents
Document Sharing Hub
Full document details: BS ISO 14346:2013

$d_{e,ov}$ effective width of an overlapping CHS brace member at the overlapped brace connection

d_i overall diameter of CHS member i (i = 0, 1, 2)

d_w depth of the web of an I- or H-section chord member ($d_w = h_0 - 2t_0 - 2r$)

e noding eccentricity of a joint, shown in Figure 1 h), with a positive value of e representing an offset from the chord centreline towards the outside of the truss

F_{ax} axial force in a brace member

$F^*_{gap,0}$ design resistance for the axial force in a chord member at the gap location

$F_{gap,0}$ design value of the axial force in a chord member at the gap location

F^*_i design resistance of the joint, expressed in terms of the axial force in member i (i = 1, 2)

F_i design value of the axial force in member i (i = 0, 1, 2)

$F_{pl,0}$ axial yield capacity of a chord member

F^*_s design resistance for the shear force of the brace to chord connection in an overlapped joint

$F_{s,gap,0}$ design value of the shear force in a chord member at the gap location

$F_{s,pl,0}$ shear yield capacity of a chord member

$F_{s,0}$ design value of the shear force in a chord member

g gap between the brace members in a K- or N-joint, defined in Figure 1 h)

g_t transverse gap in KK-joints, defined in Figure 1 n)

h_i overall in-plane depth of a plate or RHS or I- or H-section member i (i = 0, 1, 2)

h_z distance between the centres of gravity of the effective parts of the brace (beam) as shown in Table 12

i integer subscript used to designate a member of a joint:

0 denotes a chord member;

1, 2 denote the brace members.

In joints with two brace members, 1 normally denotes the compression brace and 2 the tension brace. For a single brace, i = 1 whether it is subject to compression or tension. For an overlap type joint, i is the integer subscript to designate the overlapping brace

j integer subscript used to designate the overlapped brace member in overlap type joints

k_b factor defined in Table 3

$\ell_{b,eff.}$ effective perimeter for local yielding of the (overlapping) brace

$\ell_{p,eff.}$ effective perimeter for chord punching shear

M_i design value of the moment in member i (i = 0, 1, 2)

$M^*_{ip,i}$ design resistance of the joint, expressed in terms of the in-plane moment in member i (i = 1, 2)

© ISO 2013 – All rights reserved

Documents
Document Sharing Hub
Full document details: BS ISO 14346:2013

$M_{ip,i}$ design value of the in-plane moment in member i (i = 1, 2)

$M^*_{op,i}$ design resistance of the joint, expressed in terms of the out-of-plane moment in member i (i = 1, 2)

$M_{op,i}$ design value of the out-of-plane moment in member i (i = 1, 2)

$M_{pl,0}$ plastic moment capacity of a chord member

n factor to account for chord stress in Q_f function (see applicable table)

O_v overlap ratio, expressed as a percentage $O_v = \frac{q}{p} \times 100\,\%$

$O_{v,\,limit}$ overlap limit for brace shear check

p length of the projected contact area of the overlapping brace member onto the face of the chord, in the absence of the overlapped brace member, in a K- or N-joint, defined in Figure 1 i)

Q_f chord stress function as defined in Tables 2, 4, 6, and 9

Q_u function in the design resistance equation as defined in Tables 2, 3, 4, 6, 7, and 8

Q_{ub} function in the design resistance equation for brace bending as defined in Table 4

q length of overlap, measured at the face of the chord, between one brace member toe and the position of the other projected brace member toe, in a K- or N-joint, defined in Figure 1 i)

r fillet radius of an I- or H-section

r_o external corner radius of an RHS

t wall thickness

t_i wall thickness (for CHS or RHS) or flange thickness (for I- or H-section) of member i (i = 0, 1, 2)

t_w web thickness of an I- or H-section

$W_{el,i}$ elastic section modulus of member i (i = 0, 1, 2)

$W_{pl,i}$ plastic section modulus of member i (i = 0, 1, 2)

α factor used in the expression of A_s in Tables 6 and 11

β ratio of the mean diameter or width of the brace members, to that of the chord

for T, Y- and X-joints $\beta = \frac{d_1}{d_0}$ or $\frac{d_1}{b_0}$ or $\frac{b_1}{b_0}$

for K- and N-joints $\beta = \frac{d_1 + d_2}{2d_0}$ or $\frac{b_1 + b_2}{2b_0}$ or $\frac{b_1 + b_2 + h_1 + h_2}{4b_0}$

for plate to CHS $\beta = \frac{b_1}{d_0}$

© ISO 2013 – All rights reserved
Documents
Document Sharing Hub
Full document details: BS ISO 14346:2013

for plate to RHS $\beta = \frac{b_1}{b_0}$

γ ratio of the chord width or diameter to twice the chord thickness $\gamma = \frac{d_0}{2t_0}$ or $\frac{b_0}{2t_0}$

γ_F partial load factor on applied loading

γ_M partial safety factor on joint resistance

η ratio of the brace member depth to the chord diameter or width $\eta = \frac{h_1}{d_0}$ or $\frac{h_1}{b_0}$

θ_i included angle between brace member i and the chord (i = 1, 2)

λ slenderness

μ multiplanar factor defined in Tables 5 and 10

σ_k design stress for chord side wall failure

σ_u ultimate tensile stress

σ_y yield stress

σ_{yi} yield stress of member i (i = 0, 1, 2)

ϕ angle between the planes in a multiplanar joint defined in Figures 1 j) to o), or resistance factor

χ reduction factor for (column) buckling

CHS circular hollow section

RHS rectangular hollow section

SHS square hollow section

5 Requirements

The following conditions are requirements for hollow-section joints.

— Steel grades shall be according to Clause 6.

— Hollow-section joint types shall be according to Clause 7.

— The nominal wall thickness of hollow sections shall be limited to a minimum of 1,5 mm.

— For hollow-section chords with a wall thickness greater than 25 mm, the steel shall meet adequate through thickness properties as specified in ISO 630.

— The ends of members that meet at a joint shall be prepared in such a way that their cross-sectional shape is not modified. Flattened end joints and cropped end joints are not covered in this International Standard.

— Where brace members are welded to a chord member, the included angle between brace and chord (θ_i) should be at least 30°. This is to ensure that proper welds can be made. For angles less than 30°, confirmation that sound welds can be made should be obtained from the fabricator.

© ISO 2013 – All rights reserved

Documents
Document Sharing Hub
Full document details: BS ISO 14346:2013

— In gap-type joints, to ensure that there is adequate clearance to form satisfactory welds, the gap between adjacent brace members shall not be less than the sum of the brace member thicknesses ($t_1 + t_2$).

— In overlap-type joints, the overlap shall be large enough to ensure that the interconnection of the brace members is sufficient for adequate shear transfer from one brace to the other. In any case, the overlap ratio (defined in Clause 4) shall be at least 25 %.

— Where overlapping brace members are of different widths, the narrower member shall overlap the wider.

— Where overlapping brace members with the same width have different thicknesses and/or different strength grades, the member with the lowest $t_i\sigma_{yi}$-value shall overlap the other member.

— In gap and overlap K-joints, the noding eccentricity, e, shown in Figure 1 h) and i), produces a primary bending moment which requires consideration when designing truss members.

— In gap and overlap K-joints, restrictions are placed on the noding eccentricity, e, shown in Figure 1 h) and i). Within the specified limits ($e \leq 0{,}25d_0$ or $e \leq 0{,}25h_0$), the bending moment due to this eccentricity is taken into account, for its effect on joint resistance, in the Q_f term (a function to account for chord stress at the connection face). If the noding eccentricty, e, exceeds the limits in the previous sentence, the effect of the resulting bending moment on the joint resistance shall be taken into account by distributing part of the total eccentricity moment to the brace members. (In such cases, the joint resistance shall then be determined by checking the interaction of brace axial load and brace bending moment.)

— For joints with one (or both) chord end(s) not connected to other members, the chord shall be extended from the centre of the joint over a length of $3{,}5d_0$ or $3{,}5b_0$ or the end(s) shall be welded to a cap plate with a thickness of at least $1{,}5t_0$ or 10 mm.

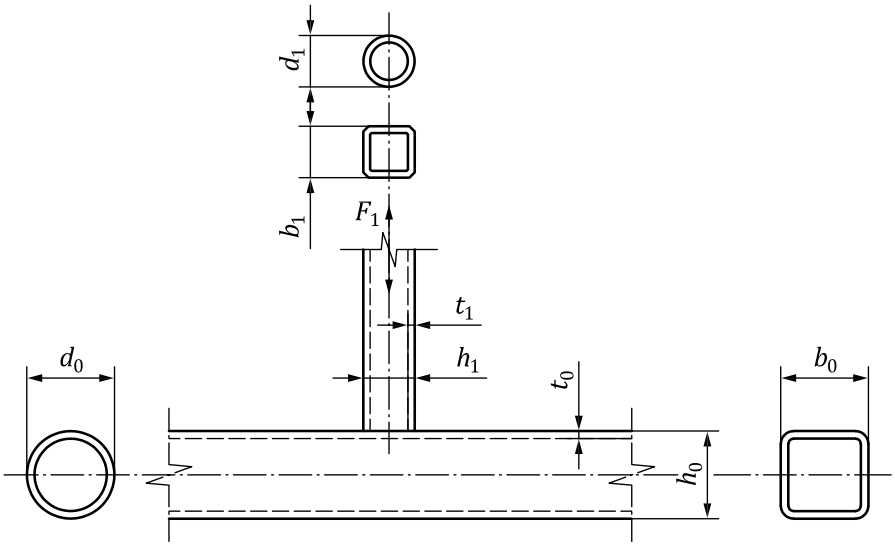

a) T-joint

© ISO 2013 – All rights reserved
Documents
Document Sharing Hub
Full document details: BS ISO 14346:2013

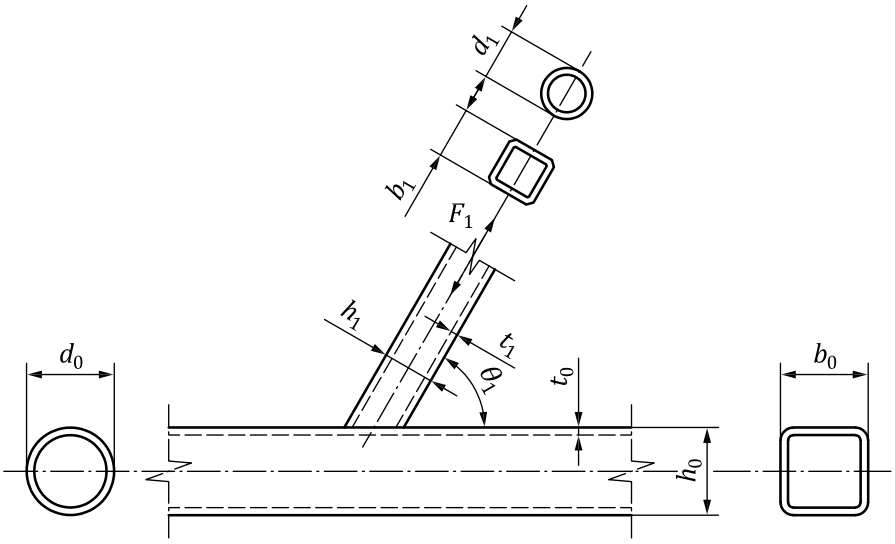

b) Y-joint

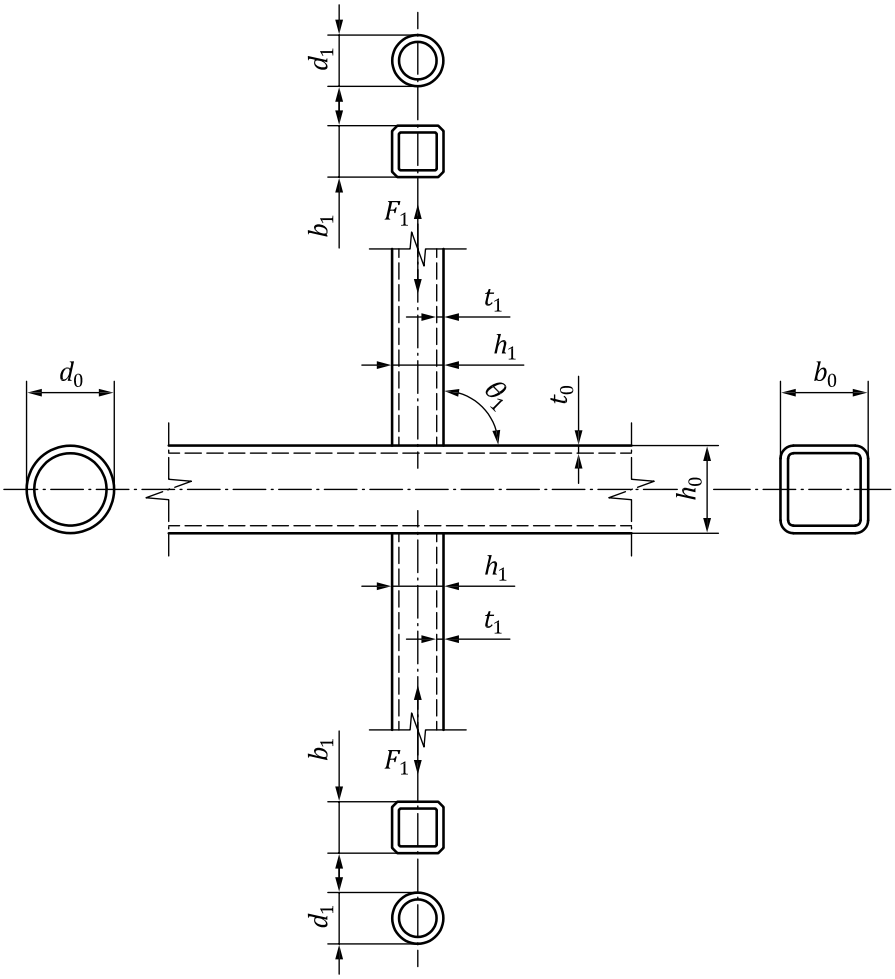

c) X-joint

© ISO 2013 – All rights reserved

Documents
Document Sharing Hub
Full document details: BS ISO 14346:2013

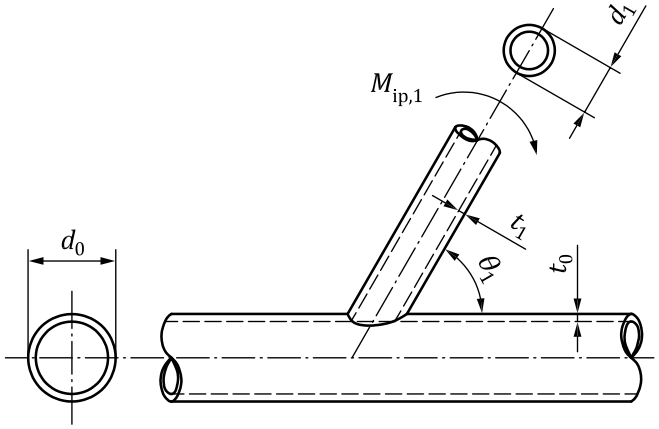

d) Y-joint (CHS chord) with brace in-plane bending

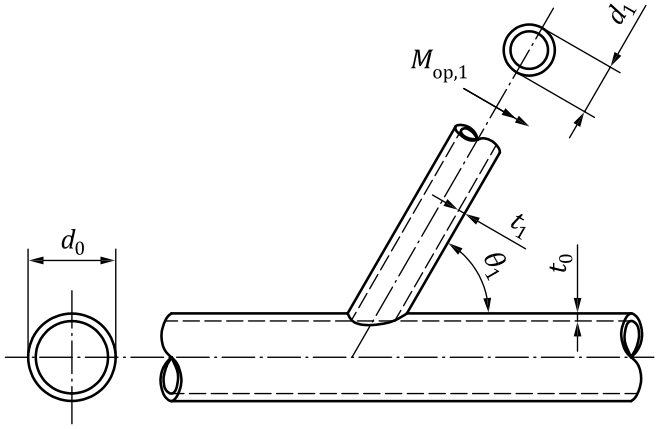

e) Y-joint (CHS chord) with brace out-of-plane bending

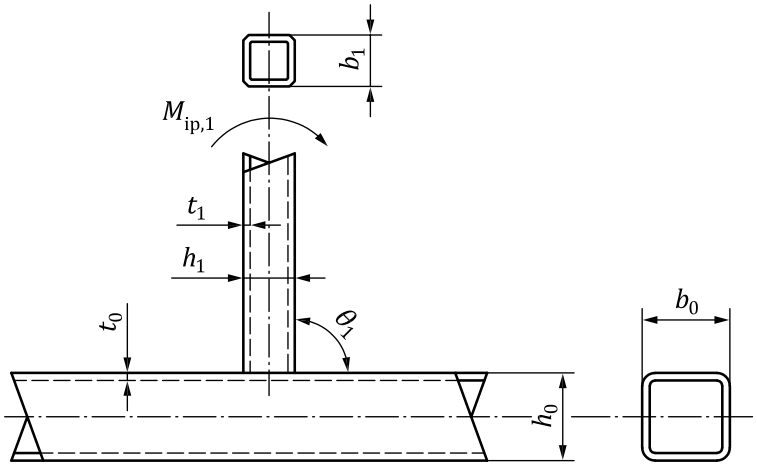

f) Y-joint (RHS chord) with brace in-plane bending

© ISO 2013 – All rights reserved
Documents
Document Sharing Hub
Full document details: BS ISO 14346:2013

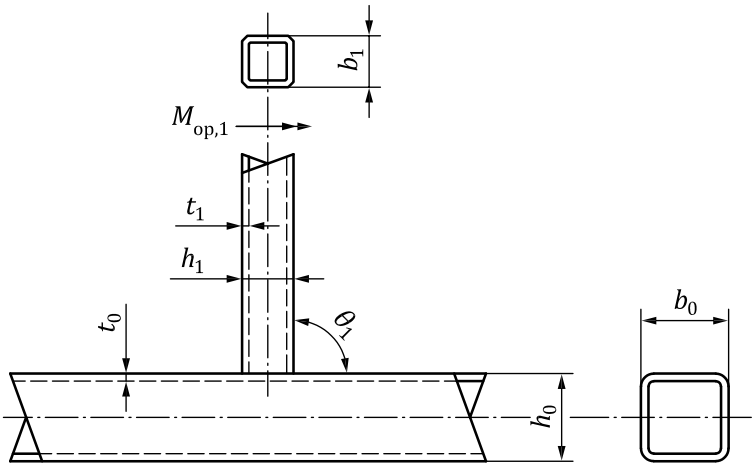

g) Y-joint (RHS chord) with brace out-of-plane bending

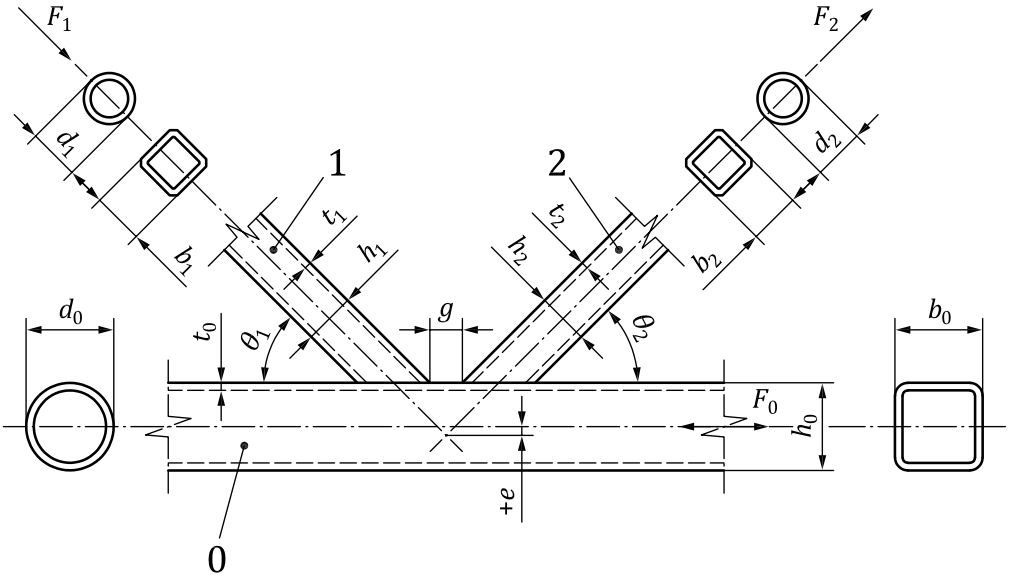

h) gap K-joint

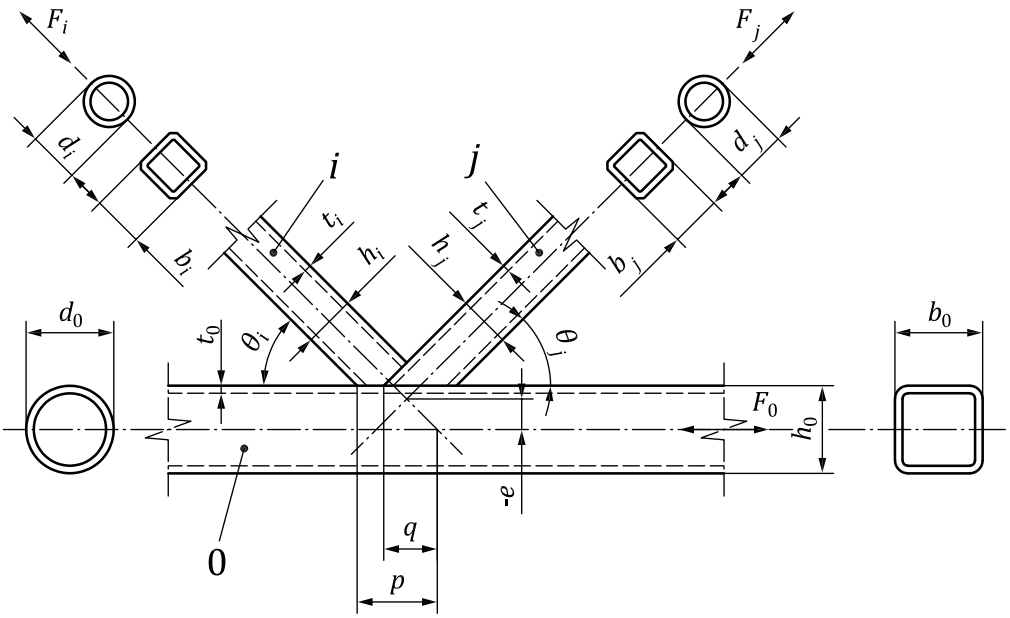

i) overlap K-joint

© ISO 2013 – All rights reserved

Documents
Document Sharing Hub
Full document details: BS ISO 14346:2013

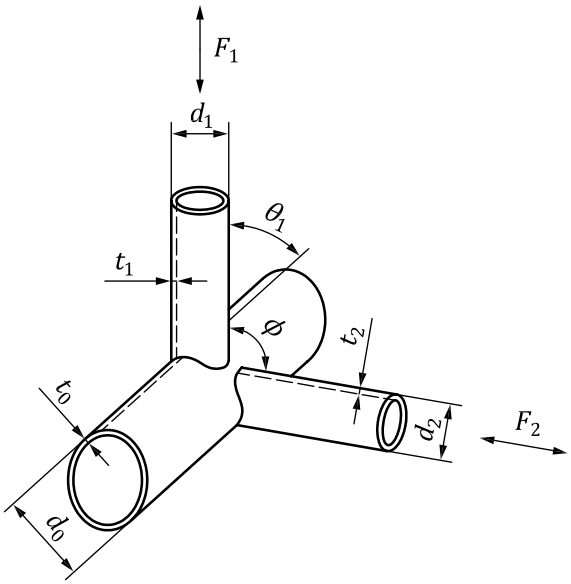

j) CHS TT-joint

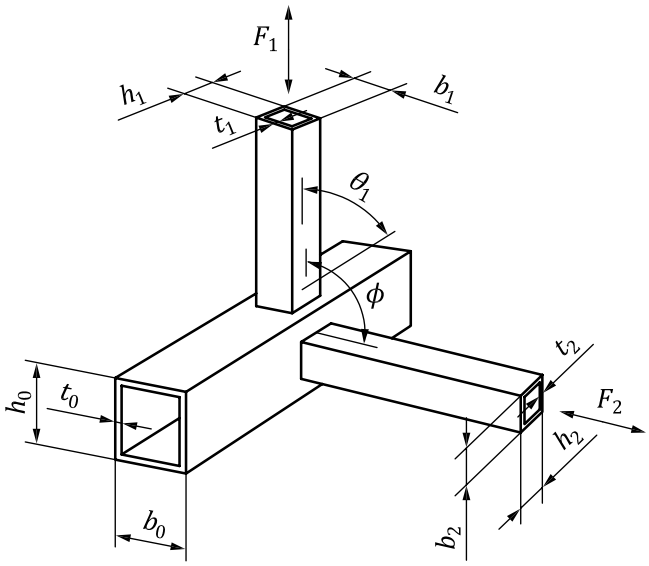

k) RHS TT-joint

© ISO 2013 – All rights reserved
Documents
Document Sharing Hub
Full document details: BS ISO 14346:2013

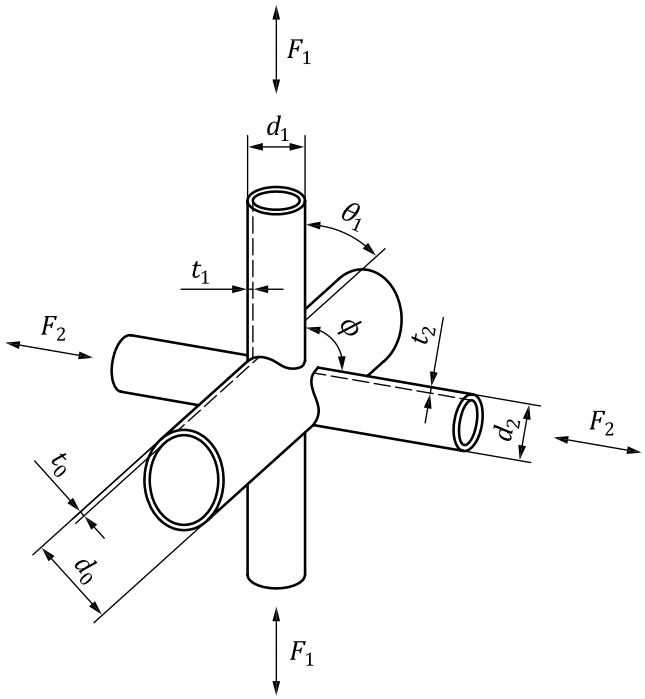

l) CHS XX-joint

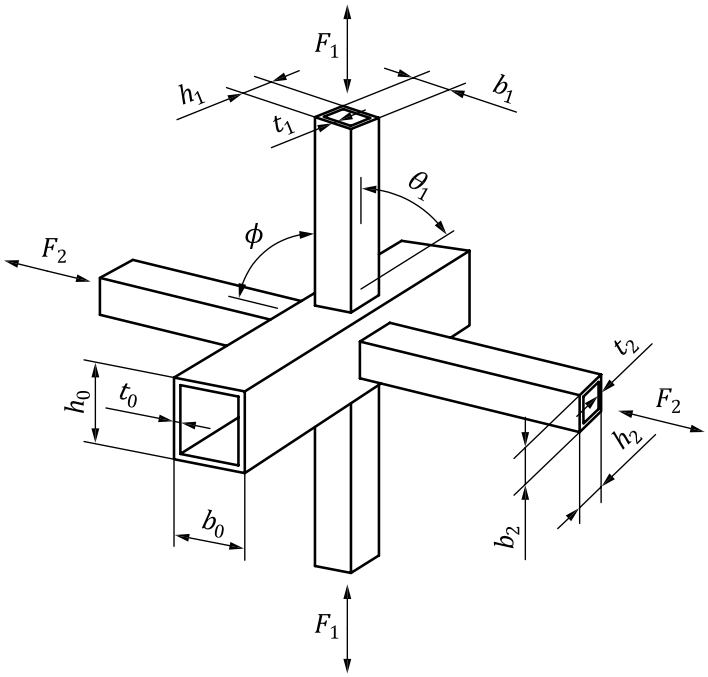

m) RHS XX-joint

© ISO 2013 – All rights reserved

Documents
Document Sharing Hub
Full document details: BS ISO 14346:2013

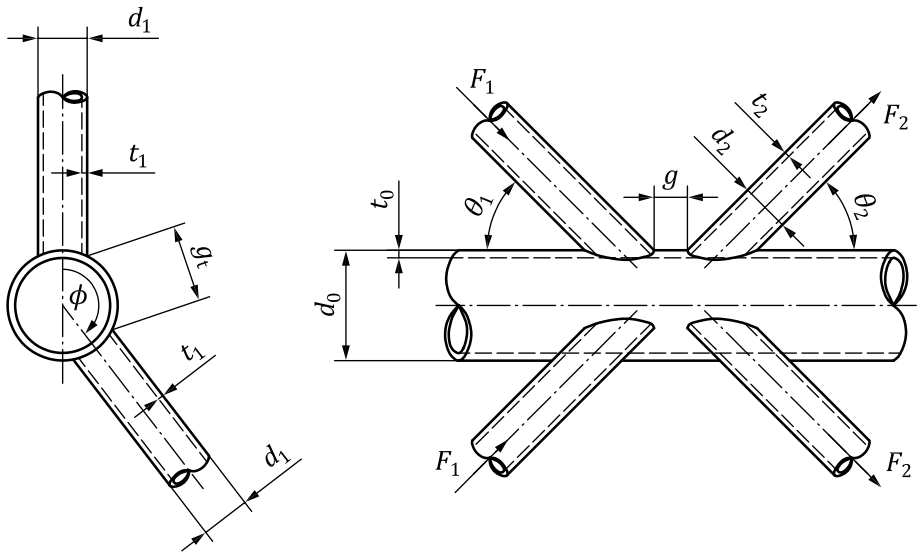

n) CHS gap KK-joint

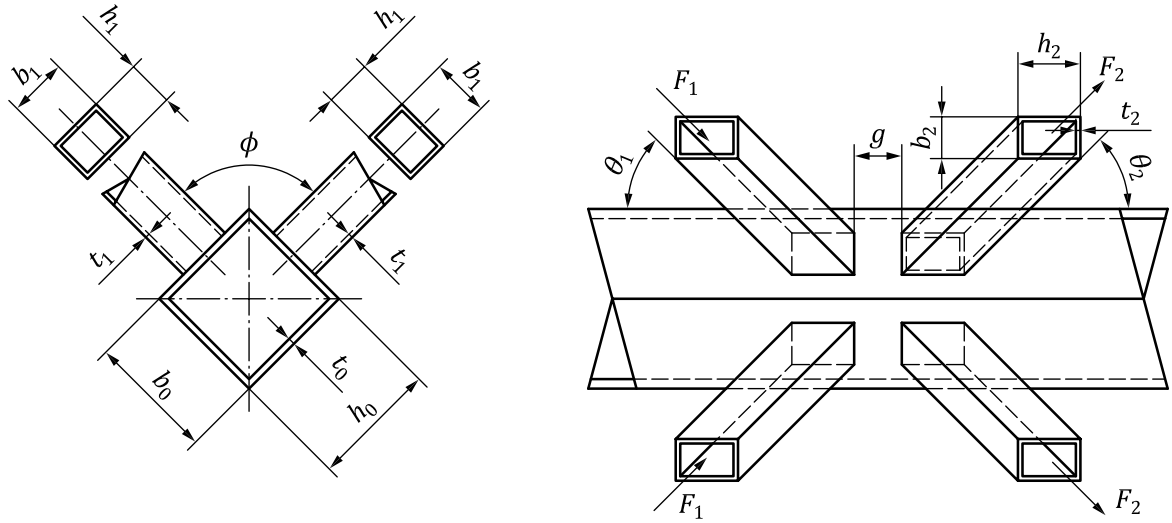

o) RHS gap KK-joint

Key

0 chord
1 compression brace
2 tension brace
i overlapping brace
j overlapped brace

Figure 1 — Joints between hollow sections

6 Materials

This International Standard is valid for both hot-finished (hot-formed) and cold-formed steel hollow sections. The manufactured hollow sections shall comply with the applicable national manufacturing specification for structural hollow sections. The nominal yield stress of hot-finished hollow sections and the nominal yield stress of the cold-formed hollow sections shall not exceed 460 N/mm^2 (MPa). Further criteria are given in 11.3. These nominal yield stresses pertain to the finished product, at the stipulated test locations.

© ISO 2013 – All rights reserved
Documents
Document Sharing Hub
Full document details: BS ISO 14346:2013