BRITISH STANDARD

BS ISO 14347:2008

Fatigue — Design procedure for welded hollow-section joints — Recommendations

ICS 25.160.40

NO COPYING WITHOUT BSI PERMISSION EXCEPT AS PERMITTED BY COPYRIGHT LAW

Document Sharing Hub
British Standards

Full document details: BS ISO 14347:2008

National foreword

This British Standard is the UK implementation of ISO 14347:2008.

The UK participation in its preparation was entrusted to Technical Committee WEE/37, Acceptance levels for flaws in welds.

A list of organizations represented on this committee can be obtained on request to its secretary.

This publication does not purport to include all the necessary provisions of a contract. Users are responsible for its correct application.

Compliance with a British Standard cannot confer immunity from legal obligations.

This British Standard was published under the authority of the Standards Policy and Strategy Committee on 31 December 2008

© BSI 2008

ISBN 978 0 580 53490 4

Amendments/corrigenda issued since publication

Date	Comments

Documents
Document Sharing Hub

Full document details: BS ISO 14347:2008

INTERNATIONAL STANDARD

ISO 14347

First edition
2008-12-01

Fatigue — Design procedure for welded hollow-section joints — Recommendations

Fatigue — Procédure de dimensionnement à la fatigue des assemblages soudés de profils creux — Recommandations

Reference number
ISO 14347:2008(E)

Documents
Document Sharing Hub

© ISO 2008

Full document details: BS ISO 14347:2008

PDF disclaimer

This PDF file may contain embedded typefaces. In accordance with Adobe's licensing policy, this file may be printed or viewed but shall not be edited unless the typefaces which are embedded are licensed to and installed on the computer performing the editing. In downloading this file, parties accept therein the responsibility of not infringing Adobe's licensing policy. The ISO Central Secretariat accepts no liability in this area.

Adobe is a trademark of Adobe Systems Incorporated.

Details of the software products used to create this PDF file can be found in the General Info relative to the file; the PDF-creation parameters were optimized for printing. Every care has been taken to ensure that the file is suitable for use by ISO member bodies. In the unlikely event that a problem relating to it is found, please inform the Central Secretariat at the address given below.

COPYRIGHT PROTECTED DOCUMENT

© ISO 2008

All rights reserved. Unless otherwise specified, no part of this publication may be reproduced or utilized in any form or by any means, electronic or mechanical, including photocopying and microfilm, without permission in writing from either ISO at the address below or ISO's member body in the country of the requester.

ISO copyright office
Case postale 56 • CH-1211 Geneva 20
Tel. + 41 22 749 01 11
Fax + 41 22 749 09 47
E-mail copyright@iso.org
Web www.iso.org

Published in Switzerland

© ISO 2008 – All rights reserved

Documents
Document Sharing Hub

Full document details: BS ISO 14347:2008

Contents

Page

Foreword iv

1 Scope 1
1.1 General 1
1.2 Materials 1
1.3 Types of joints 1

2 Normative references 1

3 Terms and definitions 2

4 Symbols and abbreviated terms 7

5 Cumulative fatigue damage 12

6 Partial safety factor 12

7 Fatigue design procedures 12
7.1 Hot-spot stress method 12
7.2 Design procedures 13

8 Fatigue strength 13
8.1 Member forces 13
8.2 Nominal stress ranges 14
8.3 SCF calculations 14
8.4 Hot-spot stress ranges 14
8.5 Fatigue strength curves 15

9 SCF calculations for CHS joints 17
9.1 Uniplanar CHS T- and Y-joints 17
9.2 Uniplanar CHS X-joints 18
9.3 Uniplanar CHS K-joints with gap 18
9.4 Multiplanar CHS XX-joints 19
9.5 Multiplanar CHS KK-joints with gap 20
9.6 Minimum SCF values 21

10 SCF calculations for RHS joints 21
10.1 Uniplanar RHS T- and X-joints 21
10.2 Uniplanar RHS K-joints with gap 22
10.3 Uniplanar RHS K-joints with overlap 23
10.4 Multiplanar RHS KK-joints with gap 24
10.5 Minimum SCF values 25

Annex A (normative) **Quality requirements for hollow sections** 26

Annex B (normative) **Weld details** 27

Annex C (informative) **A fatigue assessment procedure** 29

Annex D (normative) **SCF equations and graphs for CHS joints** 31

Annex E (normative) **SCF equations and graphs for RHS joints** 47

Bibliography 67

© ISO 2008 – All rights reserved

Documents
Document Sharing Hub
Full document details: BS ISO 14347:2008

Foreword

ISO (the International Organization for Standardization) is a worldwide federation of national standards bodies (ISO member bodies). The work of preparing International Standards is normally carried out through ISO technical committees. Each member body interested in a subject for which a technical committee has been established has the right to be represented on that committee. International organizations, governmental and non-governmental, in liaison with ISO, also take part in the work. ISO collaborates closely with the International Electrotechnical Commission (IEC) on all matters of electrotechnical standardization.

International Standards are drafted in accordance with the rules given in the ISO/IEC Directives, Part 2.

The main task of technical committees is to prepare International Standards. Draft International Standards adopted by the technical committees are circulated to the member bodies for voting. Publication as an International Standard requires approval by at least 75 % of the member bodies casting a vote.

Attention is drawn to the possibility that some of the elements of this document may be the subject of patent rights. ISO shall not be held responsible for identifying any or all such patent rights.

ISO 14347 was prepared by the International Institute of Welding, Commission XV, *Design, analysis and fabrication of welded structures*, recognized as an international standardizing body in the field of welding in accordance with Council Resolution 42/1999.

Requests for official interpretations of any aspect of this International Standard should be directed to the ISO Central Secretariat, who will forward them to the IIW Secretariat for an official response.

© ISO 2008 – All rights reserved
Documents
Document Sharing Hub
Full document details: BS ISO 14347:2008

Fatigue — Design procedure for welded hollow-section joints — Recommendations

1 Scope

1.1 General

This International Standard gives recommendations for the design and analysis of unstiffened, welded, nodal joints in braced structures composed of hollow sections of circular or square shape (with or without rectangular chord) under fatigue loading.

This International Standard applies to structures:

a) fulfilling quality requirements for hollow sections (see Annex A);

b) complying with recommended weld details (see Annex B);

c) employing permitted steel grades (see 1.2);

d) having hollow section joints (see 1.3);

e) having either

   1) square or rectangular hollow sections with a thickness between 4 mm and 16 mm, or

   2) circular hollow sections with a thickness between 4 mm and 50 mm;

f) having as stress range the range of “hot-spot” stress;

g) having identical brace (branch) members.

1.2 Materials

This International Standard applies to both hot-finished and cold-formed steel structural hollow sections, complying with the applicable national manufacturing specification, that fulfil specified quality requirements (see Annex A).

1.3 Types of joints

This International Standard applies to joints consisting of circular hollow sections (CHS) or rectangular hollow sections (RHS) as used in uniplanar or multiplanar trusses or girders, such as T-, Y-, X-, K-, XX-, and KK-joints (see Figure 1 and Figure 2).

2 Normative references

The following referenced documents are indispensable for the application of this document. For dated references, only the edition cited applies. For undated references, the latest edition of the referenced document (including any amendments) applies.

ISO 630:1995, *Structural steels — Plates, wide flats, bars, sections and profiles*

© ISO 2008 – All rights reserved

Documents
Document Sharing Hub

Full document details: BS ISO 14347:2008

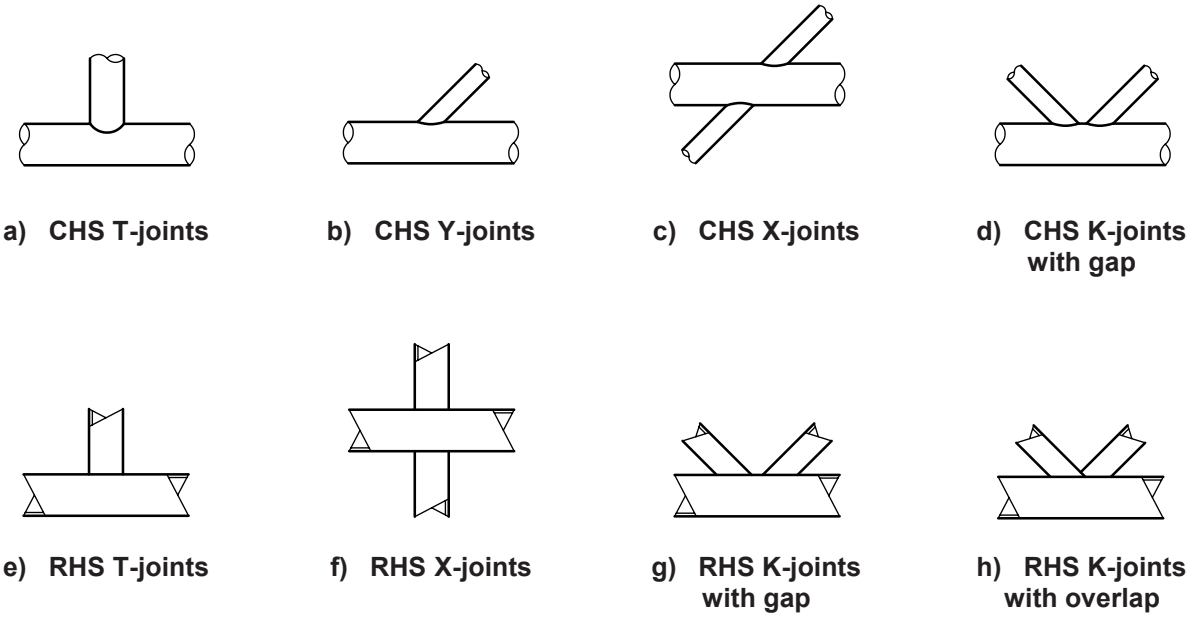

NOTE RHS are assumed to be square, although this International Standard is likely to be applicable to rectangular chord members, welded to square branch members.

Figure 1 — Types of uniplanar joints covered by this International Standard

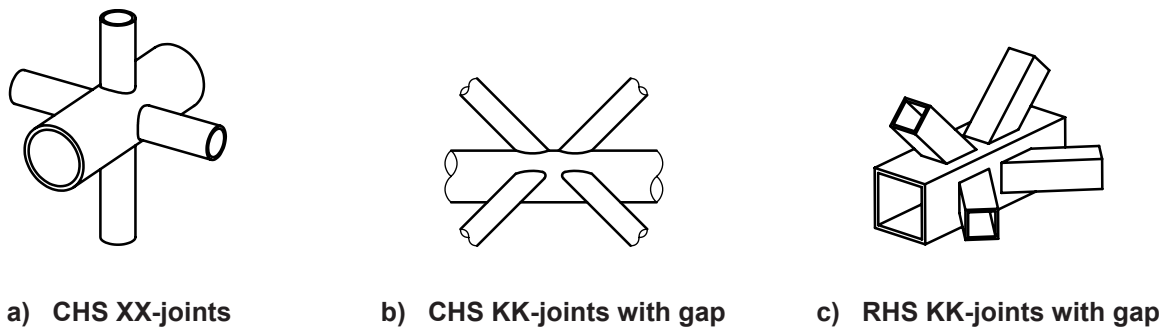

NOTE RHS are assumed to be square, although this International Standard is likely to be applicable to rectangular chord members, welded to square branch members.

Figure 2 — Types of multiplanar joints covered by this International Standard

3 Terms and definitions

For the purposes of this document, the following terms and definitions apply.

3.1
brace
branch
⟨welded hollow section joints⟩ cut and welded member

See Figure 3.

© ISO 2008 – All rights reserved
Documents
Document Sharing Hub
Full document details: BS ISO 14347:2008

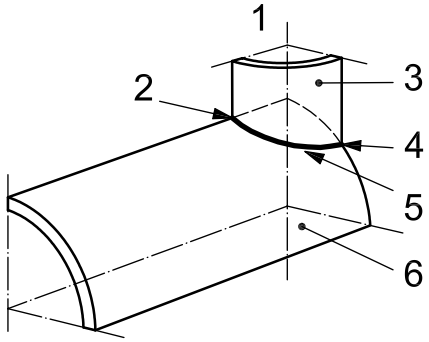

Key

1 load applied in the branch
2 crown point
3 branch
4 saddle point
5 weld
6 chord

a) Joint nomenclature

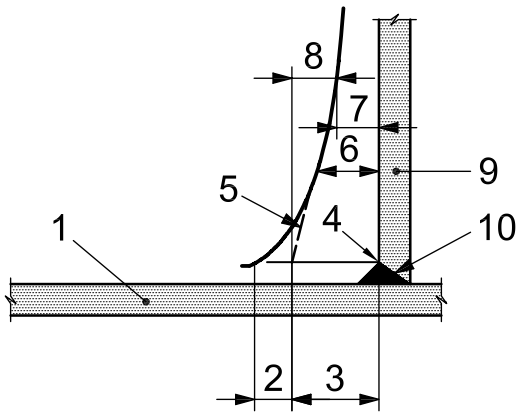

Key

1 chord wall
2 stress increase due to weld geometry
3 brace hot-spot stress
4 weld toe
5 extrapolation of geometric stress distribution to weld toe
6 stress in branch
7 nominal stress
8 increase in stress due to overall joint geometry
9 branch wall
10 weld

b) Stress distribution in branch

Figure 3 — Hot-spot stress definition in nodal joints

© ISO 2008 – All rights reserved

Documents
Document Sharing Hub
Full document details: BS ISO 14347:2008

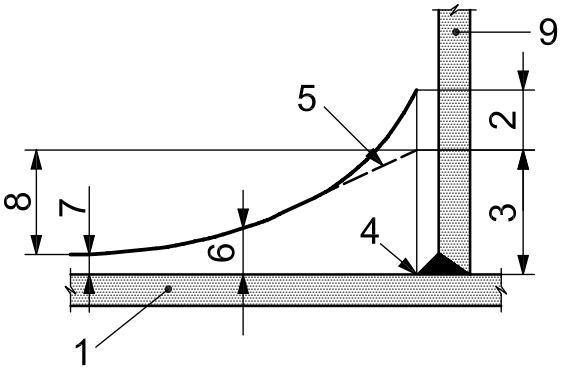

Key

1 chord wall
2 stress increase due to weld geometry
3 chord hot-spot stress
4 weld toe
5 extrapolation of geometric stress distribution to weld toe
6 stress in chord
7 nominal stress
8 increase in stress due to overall joint geometry
9 branch wall

c) Stress distribution in chord

Figure 3 (*continued*)

3.2
constant amplitude fatigue limit
⟨welded hollow section joints⟩ stress range for a specific ΔS-N curve when the number of cycles, N, is 5 million or greater

3.3
cut-off limit
stress range for a specific ΔS-N curve when the number of cycles, N, is 100 million or greater, used in the assessment of fatigue under variable amplitude loading

3.4
fatigue
deterioration of a component due to the initiation and growth of cracks under fluctuating loads

3.5
fatigue life
endurance
N_f
number of applied cycles to achieve a defined failure criterion

[ISO 1099:2006, 3.14]

NOTE In this International Standard, crack growth through the wall thickness is considered as failure.

3.6
gap length
g
distance measured along the length of the connecting face of the chord between the toes of the adjacent brace members

See Figure 4.

© ISO 2008 – All rights reserved
Documents
Document Sharing Hub
Full document details: BS ISO 14347:2008

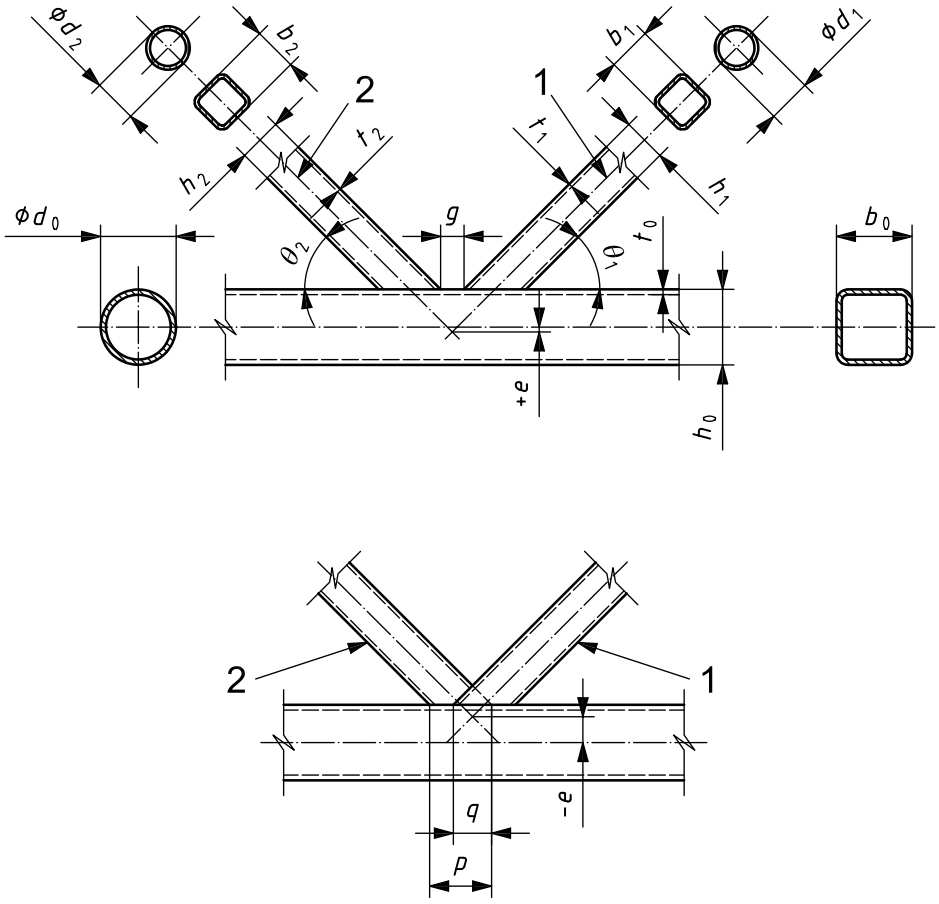

Key

1 member (overlapping in the lower diagram)

2 optionally overlapped member

NOTE For variable definitions, see Clause 4.

Figure 4 — Definition of gap g and overlap q

3.7
hot-spot stress
⟨welded hollow section joints⟩ point along the weld vicinity where the extrapolated primary stress has its maximum value (i.e. the maximum geometric stress)

NOTE This definition differs from the more general definition of hot-spot stress as the structural stress at the weld toe. The extrapolation is carried out from the region outside the influence of the effect on the stress of geometric discontinuities due to the joint configuration, but close enough to fall inside the zone of the stress gradient caused by the global geometrical effects of the connection. The extrapolation is carried out on the branch or brace (cut and welded member) side and the chord (continuous member) side of each weld (see Figure 3). The hot-spot stress can be determined by considering the stress perpendicular to the weld toe for the chord and the stress parallel to the brace axis for the brace.

3.8
nominal stress
⟨welded hollow section joints⟩ maximum stress in a cross-section calculated on the actual cross-section by simple elastic theory without taking into account the effect of geometrical discontinuities due to the joint configuration on the stress

© ISO 2008 – All rights reserved

Documents
Document Sharing Hub
Full document details: BS ISO 14347:2008

3.9
overlap
O_v
ratio of the overlap length, q, to the projected connecting length to chord of overlapping brace, p

NOTE The overlap is expressed as a percentage.

See Figure 4, where $b_1 = h_1 = h_2$, $t_1 = t_2$, and $\theta_1 = \theta_2$. See Clause 4 for the variable definitions.

3.10
ΔS-N **curve**
curve giving the relation between the stress range and the number of cycles to failure

NOTE 1 Conventionally, the range of stress is plotted on the vertical axis and the number of cycles on the horizontal axis using logarithmic scales for both axes.

NOTE 2 The ΔS-N curves given in this International Standard have been derived from a statistical analysis of relevant experimental data and represent lives that are less than the mean life by two standard deviations of lg N.

3.11
stress concentration factor
SCF
K_t
⟨welded hollow section joints⟩ ratio between the hot-spot stress at the joint and the nominal stress in the member due to a basic member load that causes this hot-spot stress

NOTE In joints with more than one branch, each branch is considered. Generally, stress concentration factors are calculated for the chord and branch.

3.12
stress range
ΔS
arithmetic difference between the maximum and minimum stress

$$\Delta S = S_{max} - S_{min}$$

NOTE 1 Adapted from ISO 1099:2006, 3.10.

NOTE 2 The nominal stress range is based on the nominal stresses while the hot-spot stress range is based on hot-spot stresses.

See Figure 5.

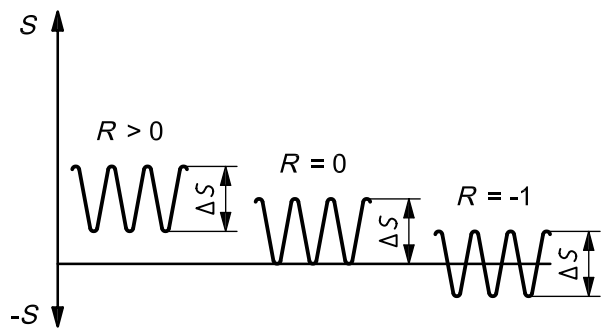

Key
S tensile stress
$-S$ compressive stress

Figure 5 — Stress range, ΔS, and stress ratio, R

© ISO 2008 – All rights reserved
Documents
Document Sharing Hub
Full document details: BS ISO 14347:2008

3.13
stress ratio
R
algebraic ratio of the minimum and maximum stress of a cycle:

$$R = S_{min}/S_{max}$$

[ISO 11782-1:1998, 3.6]

NOTE Tension is taken as positive and compression as negative.

See Figure 5.

3.14
structural stress
geometric stress
⟨welded hollow section joints⟩ linearly distributed stress across the section thickness that arises from applied loads and the corresponding reaction of the particular structural part, taking account of all geometrical discontinuities but excluding the notch effects of local structural discontinuities (e.g. weld toe)

4 Symbols and abbreviated terms

A	cross-sectional area of a member
a	throat thickness
b_0	RHS chord width
b_i	width of brace i
C	chord-end fixity factor
D	cumulative fatigue damage index
d_0	CHS chord diameter
d_i	diameter of brace i (CHS)
e	joint eccentricity
F_{ax}	axial force
F_{ch}	force in chord
F_{cov}	force in carry-over brace
F_i	function in determining SCF (see D.1.2, D.2.2)
F_{ref}	force of reference brace
f_c	correction factor
f_m	magnification factor
f_{mc}	multiplanar correction factor (see Tables 4 and 5)
g	gap length

© ISO 2008 – All rights reserved

Documents
Document Sharing Hub
Full document details: BS ISO 14347:2008

g'	ratio of the gap length to the chord wall thickness, g/t_0
h_0	RHS chord depth
h_i	depth of brace i
K_t	stress concentration factor
$K_{t,0,b,ax}$	reference SCF for brace under basic balanced axial loading
$K_{t,0,b_4,cov}$	carry-over SCF for brace at location 4 (see D.4.2.1.2.2)
$K_{t,0,b_4,ref}$	reference SCF for brace at location 4 (see D.4.2.1.1.2)
$K_{t,0,ch,ax}$	reference SCF for chord under basic balanced axial loading
$K_{t,0,ch_2,cov}$	carry-over SCF for chord at location 2 (see D.4.2.1.2.1)
$K_{t,0,ch_2,ref}$	reference SCF for chord at location 2 (see D.4.2.1.1.1)
$K_{t,ax,b}$	SCF for load condition “axial force in brace”
$K_{t,ax,c}$	SCF for load condition “axial force in chord”
$K_{t,ax,cov\text{-}b}$	SCF for load condition “axial force in carry-over brace”
$K_{t,ax,ref\text{-}b}$	SCF for load condition “axial force in reference brace”
$K_{t,b,ax}$	SCF for brace under basic balanced axial loading
$K_{t,b,c}$	SCF for brace under chord loading
$K_{t,b_A,ax}$	SCF for brace along line A under basic balanced axial loading (see E.1.2.1.2)
$K_{t,b_E,ax}$	SCF for brace along line E under basic balanced axial loading (see E.1.2.1.2)
$K_{t,b_A,ipb}$	SCF for brace along line A under in-plane bending on the brace (see See E.1.2.2.2)
$K_{t,b_E,ipb}$	SCF for brace along line E under in-plane bending on the brace (see See E.1.2.2.2)
$K_{t,b_3,cov,ax}$	SCF for brace at location 3 under axial loading in carry-over brace (see D.4.2.1.2.2)
$K_{t,b_4,cov,ax}$	SCF for brace at location 4 under axial loading in carry-over brace (see D.4.2.1.2.2)
$K_{t,b_3,cov,ipb}$	SCF for brace at location 3 under in-plane bending in carry-over brace (see D.4.2.2.2.2)
$K_{t,b_4,cov,ipb}$	SCF for brace at location 4 under in-plane bending in carry-over brace (see D.4.2.2.2.2)
$K_{t,b_3,cov,opb}$	SCF for brace at location 3 under out-of-plane bending in carry-over brace (see D.4.2.3.2.2)
$K_{t,b_4,cov,opb}$	SCF for brace at location 4 under out-of-plane bending in carry-over brace (see D.4.2.3.2.2)
$K_{t,b,cr,ax}$	SCF for brace crown under axial loading
$K_{t,b,cr,ipb}$	SCF for brace crown under in-plane bending
$K_{t,b,cr,opb}$	SCF for brace crown under out-of-plane bending
$K_{t,b_3,ref,ax}$	SCF for brace at location 3 under axial loading in reference brace (see D.4.2.1.1.2)

© ISO 2008 – All rights reserved
Documents
Document Sharing Hub
Full document details: BS ISO 14347:2008

$K_{t,b_4,ref,ax}$	SCF for brace at location 4 under axial loading in reference brace (see D.4.2.1.1.2)
$K_{t,b_3,ref,ipb}$	SCF for brace at location 3 under in-plane bending in reference brace (see D.4.2.2.1.2)
$K_{t,b_4,ref,ipb}$	SCF for brace at location 4 under in-plane bending in reference brace (see D.4.2.2.1.2)
$K_{t,b_3,ref,opb}$	SCF for brace at location 3 under out-of-plane bending in reference brace (see D.4.2.3.1.2)
$K_{t,b_4,ref,opb}$	SCF for brace at location 4 under out-of-plane bending in reference brace (see D.4.2.3.1.2)
$K_{t,b,s,ax}$	SCF for brace saddle under axial loading
$K_{t,b,s,opb}$	SCF for brace saddle under out-of-plane bending
$K_{t,b,s,ipb}$	SCF for brace saddle under in-plane bending
$K_{t,ch,ax}$	SCF for chord under basic balanced axial loading
$K_{t,ch,ch}$	SCF for chord under chord loading
$K_{t,ch_B,ax}$	SCF for chord along line B under axial loading in the brace (see E.1.2.1.1)
$K_{t,ch_C,ax}$	SCF for chord along line C under axial loading in the brace (see E.1.2.1.1)
$K_{t,ch_D,ax}$	SCF for chord along line D under axial loading in the brace (see E.1.2.1.1)
$K_{t,ch_B,ipb}$	SCF for chord along line B under in-plane bending in the brace (see E.1.2.2.1)
$K_{t,ch_C,ipb}$	SCF for chord along line C under in-plane bending in the brace (see E.1.2.2.1)
$K_{t,ch_D,ipb}$	SCF for chord along line D under in-plane bending in the brace (see E.1.2.2.1)
$K_{t,ch_1,cov,ax}$	SCF for chord at location 1 under axial loading in carry-over brace (see D.4.2.1.2.1)
$K_{t,ch_2,cov,ax}$	SCF for chord at location 2 under axial loading in carry-over brace (see D.4.2.1.2.1)
$K_{t,ch_1,cov,ipb}$	SCF for chord at location 1 under in-plane bending in carry-over brace (see D.4.2.2.2.1)
$K_{t,ch_2,cov,ipb}$	SCF for chord at location 2 under in-plane bending in carry-over brace (see D.4.2.2.2.1)
$K_{t,ch_1,cov,opb}$	SCF for chord at location 1 under out-of-plane bending in carry-over brace (see D.4.2.3.2.1)
$K_{t,ch_2,cov,opb}$	SCF for chord at location 2 under out-of-plane bending in carry-over brace (see D.4.2.3.2.1)
$K_{t,ch,cr,ax}$	SCF for chord crown under axial loading
$K_{t,ch,cr,ipb}$	SCF for chord crown under in-plane bending
$K_{t,ch,cr,opb}$	SCF for chord crown under out-of-plane bending
$K_{t,ch_1,ref,ax}$	SCF for chord at location 1 under axial loading in reference brace (see D.4.2.1.1.1)
$K_{t,ch_2,ref,ax}$	SCF for chord at location 2 under axial loading in reference brace (see D.4.2.1.1.1)
$K_{t,ch_1,ref,ipb}$	SCF for chord at location 1 under in-plane bending in reference brace (see D.4.2.2.1.1)
$K_{t,ch_2,ref,ipb}$	SCF for chord at location 2 under in-plane bending in reference brace (see D.4.2.2.1.1)
$K_{t,ch_1,ref,opb}$	SCF for chord at location 1 under out-of-plane bending in reference brace (see D.4.2.3.1.1)

© ISO 2008 – All rights reserved

Documents
Document Sharing Hub
Full document details: BS ISO 14347:2008

$K_{t,ch_2,ref,opb}$	SCF for chord at location 2 under out-of-plane bending in reference brace (see D.4.2.3.1.1)
$K_{t,ch,s,ax}$	SCF for chord saddle under axial loading
$K_{t,ch,s,ipb}$	SCF for chord saddle under in-plane bending
$K_{t,ch,s,opb}$	SCF for chord saddle under out-of-plane bending
$K_{t,ipb,b}$	SCF for load condition “in-plane bending in brace”
$K_{t,ipb,ch}$	SCF for load condition “in-plane bending in chord”
$K_{t,ipb,ref\text{-}b}$	SCF for load condition “in-plane bending in reference brace”
$K_{t,K}$	SCF for uniplanar K-joints
$K_{t,KK}$	SCF for multiplanar KK-joints
$K_{t,T}$	SCF for uniplanar CHS T-joints subjected to in-plane bending
$K_{t,opb,b}$	SCF for load condition “out-of-plane bending in brace”
$K_{t,opb,cov\text{-}b}$	SCF for load condition “out-of-plane bending in carry-over brace”
$K_{t,opb,ref\text{-}b}$	SCF for load condition “out-of-plane bending in reference brace”
$K_{t,\theta}$	SCF for acute angle between brace and chord axes
L	chord length between simple support or contraflexure points (see Figure D.1)
M_{ch}	bending moment in chord member
M_{cov}	bending moment in carry-over brace
M_{ipb}	in-plane bending moment (see Figure D.2)
M_{opb}	out-of-plane bending moment (see Figure D.2)
M_{ref}	moment of reference brace
m	ratio of the brace axial load in the carry-over plane to that in the reference plane (see Figure 8)
N	number of cycles
N_f	number of cycles to failure
n_i	number of cycles of stress range, ΔS_i
O_v	overlap, $(q/p) \times 100$
R	stress ratio
p	projected connecting length to chord of overlapping brace
q	overlap length
SCF	stress concentration factor
S_{max}	maximum stress

© ISO 2008 – All rights reserved
Documents
Document Sharing Hub
Full document details: BS ISO 14347:2008

S_{min}	minimum stress
T_i	terms used to simplify the writing of SCF equations for T-joints (see D.1.2)
t	thickness of member subjected to fatigue-cracking test
t_0	chord wall thickness
t_i	thickness of brace wall i
W_{ipb}	elastic section modulus of a member for in-plane bending
W_{opb}	elastic section modulus of a member for out-of-plane bending
X_i	terms used to simplify the writing of SCF equations for X-joints (see D.2.2)
α	relative chord length, $2L/d_0$ or $2\ L/b_0$
β	diameter or width ratio, d_i/d_0 or b_i/b_0
γ	chord slenderness, $d_0/2t_0$ or $b_0/2t_0$
γ_{Ff}	partial safety factor for fatigue loading
γ_{Mf}	partial safety factor for fatigue strength
ΔS	stress range
ΔS_{ax}	axial stress range
$\Delta S_{ax,b}$	stress range for load condition “axial force in brace”
$\Delta S_{ax,ch}$	stress range for load condition “axial force in chord”
$\Delta S_{ax,cov\text{-}b}$	stress range for load condition “axial force in carry-over brace”
$\Delta S_{ax,ref\text{-}b}$	stress range for load condition “axial force in reference brace”
ΔS_{hs}	hot-spot stress range
$\Delta S_{ipb,b}$	stress range for load condition “in-plane bending in brace”
$\Delta S_{ipb,ch}$	stress range for load condition “in-plane bending in chord”
$\Delta S_{ipb,ref\text{-}b}$	stress range for load condition “in-plane bending in reference brace”
$\Delta S_{opb,b}$	stress range for load condition “out-of-plane bending in brace”
$\Delta S_{opb,cov\text{-}b}$	stress range for load condition “out-of-plane bending in carry-over brace”
$\Delta S_{opb,ref\text{-}b}$	stress range for load condition “out-of-plane bending in reference brace”
θ_i	acute angles between brace and chord axes (in Y-, X- and K-joints)
τ	wall thickness ratio, t_i/t_0
ϕ	angle between planes with braces in multiplanar joints (see Figure D.9)
ψ	circumferential gap parameter, $\phi - 2 \arcsin \beta$

© ISO 2008 – All rights reserved

Documents
Document Sharing Hub
Full document details: BS ISO 14347:2008

5 Cumulative fatigue damage

5.1 For constant amplitude loading, it is assumed that there is no fatigue damage when the stress range is below the constant amplitude fatigue limit defined in 3.2.

5.2 For variable amplitude loading, the stress ranges below the cut-off limit defined in 3.3 do not contribute to fatigue damage.

5.3 When the stress ranges for a constant amplitude loaded structure, or when the maximum stress ranges for a variable amplitude loaded structure, are above the constant amplitude fatigue limit, the cumulative fatigue damage index, D, can be assessed using the Palmgren-Miner linear rule, for each potential crack location; i.e.

$$D = \sum \frac{n_i}{N_\mathrm{f}}$$

where

n_i is the number of cycles of a particular stress range, ΔS_i;

N_f is the number of cycles to failure for that particular stress range.

5.4 The allowable cumulative fatigue damage index for structures in a non-aggressive environment is generally taken as 1,0, if the effect of fatigue cracks and the possibility for inspection are taken into account by partial safety factors.

6 Partial safety factor

6.1 The partial safety factor for fatigue loading, γ_{Ff}, is taken as 1,0.

6.2 The partial safety factor for fatigue strength, γ_{Mf}, is given in Table 1.

Table 1 — Partial safety factor for fatigue strength on hot-spot stress ranges

Inspection and access	Fail-safe (redundant) component	Non fail-safe (statically determinate) component
Periodic inspection and maintenance (Accessible joint detail)	1,0	1,25
Periodic inspection and maintenance (Poor accessibility detail)	1,15	1,35

7 Fatigue design procedures

7.1 Hot-spot stress method

The hot-spot stress (also called geometric stress) method relates the fatigue life of a joint to the hot-spot stress at the weld toe rather than the nominal stress. It takes the uneven stress distribution around the perimeter of the joint into account directly.

© ISO 2008 – All rights reserved
Documents
Document Sharing Hub
Full document details: BS ISO 14347:2008

7.2 Design procedures

7.2.1 Determine the axial force ranges and bending moment ranges in the chord and braces using a structural analysis as described in 8.1.

7.2.2 Determine the nominal stress ranges, ΔS, as specified in 8.2.

7.2.3 Determine the stress concentration factors (SCFs) as specified in 8.3.

7.2.4 Determine the hot-spot stress ranges, ΔS_{hs}, as specfied in 8.4.

7.2.5 Determine the permissible number of cycles for a given hot-spot stress range at a specific joint location from a fatigue strength curve given in 8.5.

NOTE A fatigue assessment procedure is given in Annex C.

8 Fatigue strength

8.1 Member forces

8.1.1 General. For welded hollow section structures, member forces shall be obtained by analysis of the complete structure, in which noding eccentricity of the member centrelines at the joint (see Figure 6), as well as local joint flexibility, is taken into account. This can be achieved by one of the methods specified in 8.1.2 to 8.1.4.

8.1.2 Sophisticated three dimensional finite element modelling, where plate, shell, and solid elements are used at the joints (appropriate for experienced analysts).

8.1.3 Simplified structural analysis using frame analysis for triangulated trusses or lattice girders. Axial forces and bending moments in the members can be determined using a structural analysis assuming a continuous chord and pin-ended braces (see Figure 6). This produces axial forces in the braces, and both axial forces and bending moments in the chord. This modelling assumption is particularly appropriate for moving loads along the chord members in structures such as cranes and bridges.

8.1.4 Rigid frame analysis for two or three dimensional Vierendeel girders.

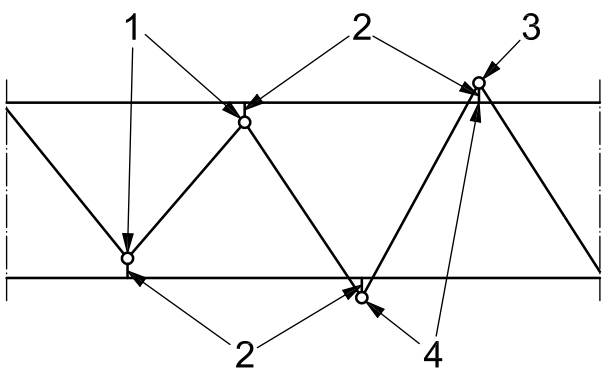

Key

1 noding condition for most overlap connections
2 extremely stiff members
3 pin
4 noding condition for most gap connections

Figure 6 — Frame modelling assumptions

© ISO 2008 – All rights reserved

Documents
Document Sharing Hub
Full document details: BS ISO 14347:2008

8.2 Nominal stress ranges

8.2.1 The determination of nominal stress ranges depends on the method used to determine member forces.

8.2.2 For analysis undertaken using the approach in 8.1.2, the nominal range of stresses due to axial, ΔS_{ax}, in-plane bending, ΔS_{ipb}, and out-of-plane bending, ΔS_{opb}, in any member can be determined by Equations (1), (2), and (3), respectively:

$$\Delta S_{ax} = \frac{F_{ax}}{A} \tag{1}$$

$$\Delta S_{ipb} = \frac{M_{ipb}}{W_{ipb}} \tag{2}$$

$$\Delta S_{opb} = \frac{M_{opb}}{W_{opb}} \tag{3}$$

See Clause 4 for the variable definitions.

8.2.3 For analysis undertaken using the approach in 8.1.3, the nominal stress range in any member can be determined by Equation (2) or Equation (4):

$$\Delta S_{ax} = f_m \frac{F_{ax}}{A} \tag{4}$$

where the magnification factor, f_m, is given in Table 2.

8.2.4 For analysis undertaken using the approach in 8.1.4, the nominal stress range in any member can be determined by Equations (1), (2), and (3).

Table 2 — Magnification factor, f_m, to account for secondary bending moments in K-joints

Type of K-joint	Chord member	Brace member
CHS gap	1,5	1,3
RHS gap	1,5	1,5
RHS overlap	1,5	1,3

8.3 SCF calculations

8.3.1 If the analysis has been undertaken using the approach in 8.1.2, the SCFs can be calculated from the analysis or using Clause 9 (for CHS joints) or Clause 10 (for RHS joints).

8.3.2 If the analysis has been undertaken using the approach in 8.1.3, the SCFs can be calculated using Clause 9 (for CHS joints) or Clause 10 (for RHS joints).

8.3.3 If the analysis has been undertaken using the approach in 8.1.4, the SCFs can be calculated using Clause 9 (for CHS joints) or Clause 10 (for RHS joints).

8.4 Hot-spot stress ranges

8.4.1 For analysis undertaken using the approach in 8.1.2, the hot-spot stress ranges can be obtained directly from the analysis for each load combination. In all other cases, the following procedures should be used to determine the hot-spot stress ranges.

© ISO 2008 – All rights reserved
Documents
Document Sharing Hub
Full document details: BS ISO 14347:2008

8.4.2 The hot-spot stress range at *one location* under *one load case* is the product of the nominal stress range and the corresponding stress concentration factor (SCF).

8.4.3 Superposition of the hot-spot stress ranges at the *same location* can be used for combined load cases.

8.4.4 If the position of the maximum hot-spot stress in a member, for the relevant loading condition, cannot be determined, then the maximum SCF values shall be applied to all points around the periphery of the member at a joint.

8.4.5 Hot-spot stress ranges shall be calculated for both the chord member and brace members.

8.4.6 Under general loading conditions, the hot-spot stress range at any location, in the chord member, is given by the equations in 8.4.6.1 and 8.4.6.2.

8.4.6.1 For CHS XX-joints

$$\Delta S_{\text{hs}} = K_{\text{t,ax,ref-b}}\ \Delta S_{\text{ax,ref-b}} + K_{\text{t,ipb,ref-b}}\ \Delta S_{\text{ipb,ref-b}} + K_{\text{t,opb,ref-b}}\ \Delta S_{\text{opb,ref-b}} + K_{\text{t,ax,ch}}\ \Delta S_{\text{ax,ch}} + K_{\text{t,ax,cov-b}}\ \Delta S_{\text{ax,cov-b}} + K_{\text{t,opb,cov-b}}\ \Delta S_{\text{obp,cov-b}}$$

8.4.6.2 For all other joints

$$\Delta S_{\text{hs}} = K_{\text{t,ax,b}}\ \Delta S_{\text{ax,b}} + K_{\text{t,ipb,b}}\ \Delta S_{\text{ipb,b}} + K_{\text{t,opb,b}}\ \Delta S_{\text{opb,b}} + K_{\text{t,ax,ch}}\ \Delta S_{\text{ax,ch}} + K_{\text{t,ipb,ch}}\ \Delta S_{\text{ipb,ch}}$$

For K-joints, $\Delta S_{\text{ax,ch}}$ refers to the additional stress range determined from Figures D.5 b), E.3 b), or E.12 b).

8.4.7 Under general loading conditions, the hot-spot stress range at any location, in the brace member, is given by the equations in 8.4.7.1 and 8.4.7.2.

8.4.7.1 For CHS XX-joints

$$\Delta S_{\text{hs}} = K_{\text{t,ax,ref-b}}\ \Delta S_{\text{ax,ref-b}} + K_{\text{t,ipb,ref-b}}\ \Delta S_{\text{ipb,ref-b}} + K_{\text{t,opb,ref-b}}\ \Delta S_{\text{opb,ref-b}} + K_{\text{t,ax,cov-b}}\ \Delta S_{\text{ax,cov-b}} + K_{\text{t,opb,cov-b}}\ \Delta S_{\text{opb,cov-b}}$$

8.4.7.2 For all other joints

$$\Delta S_{\text{hs}} = K_{\text{t,ax,b}}\ \Delta S_{\text{ax,b}} + K_{\text{t,ipb,b}}\ \Delta S_{\text{ipb,b}} + K_{\text{t,opb,b}}\ \Delta S_{\text{opb,b}}$$

8.5 Fatigue strength curves

8.5.1 The fatigue strength curves (ΔS_{hs}–N_{f}) are shown in Figure 7.

8.5.2 The equations for the fatigue strength curves (ΔS_{hs}–N_{f}) are:

for $10^3 < N_{\text{f}} < 5 \times 10^6$

$$\lg \Delta S_{\text{hs}} = \frac{1}{3}(12{,}476 - \lg N_{\text{f}}) + 0{,}06 \lg N_{\text{f}} \lg(\frac{16}{t}) \tag{5}$$

or

$$\lg N_{\text{f}} = \frac{12{,}476 - 3 \lg \Delta S_{\text{hs}}}{1 - 0{,}18 \lg (16/t)} \tag{6}$$

for $5 \times 10^6 < N_{\text{f}} < 10^8$ (variable amplitude only)

$$\lg \Delta S_{\text{hs}} = \frac{1}{5}(16{,}327 - \lg N_{\text{f}}) + 0{,}402 \lg (\frac{16}{t}) \tag{7}$$

© ISO 2008 – All rights reserved

Documents
Document Sharing Hub
Full document details: BS ISO 14347:2008

or

$$\lg N_f = 16{,}327 - 5 \lg \Delta S_{hs} + 2{,}01 \lg(\frac{16}{t}) \quad (8)$$

In Equations (5) to (8), t is the thickness of applicable member being checked for fatigue cracking: for CHS joints — 4 mm $\leqslant t \leqslant$ 50 mm; for RHS joints — 4 mm $\leqslant t \leqslant$ 16 mm.

8.5.3 The constant amplitude fatigue limit and cut-off limit in Figure 7 are listed in Table 3.

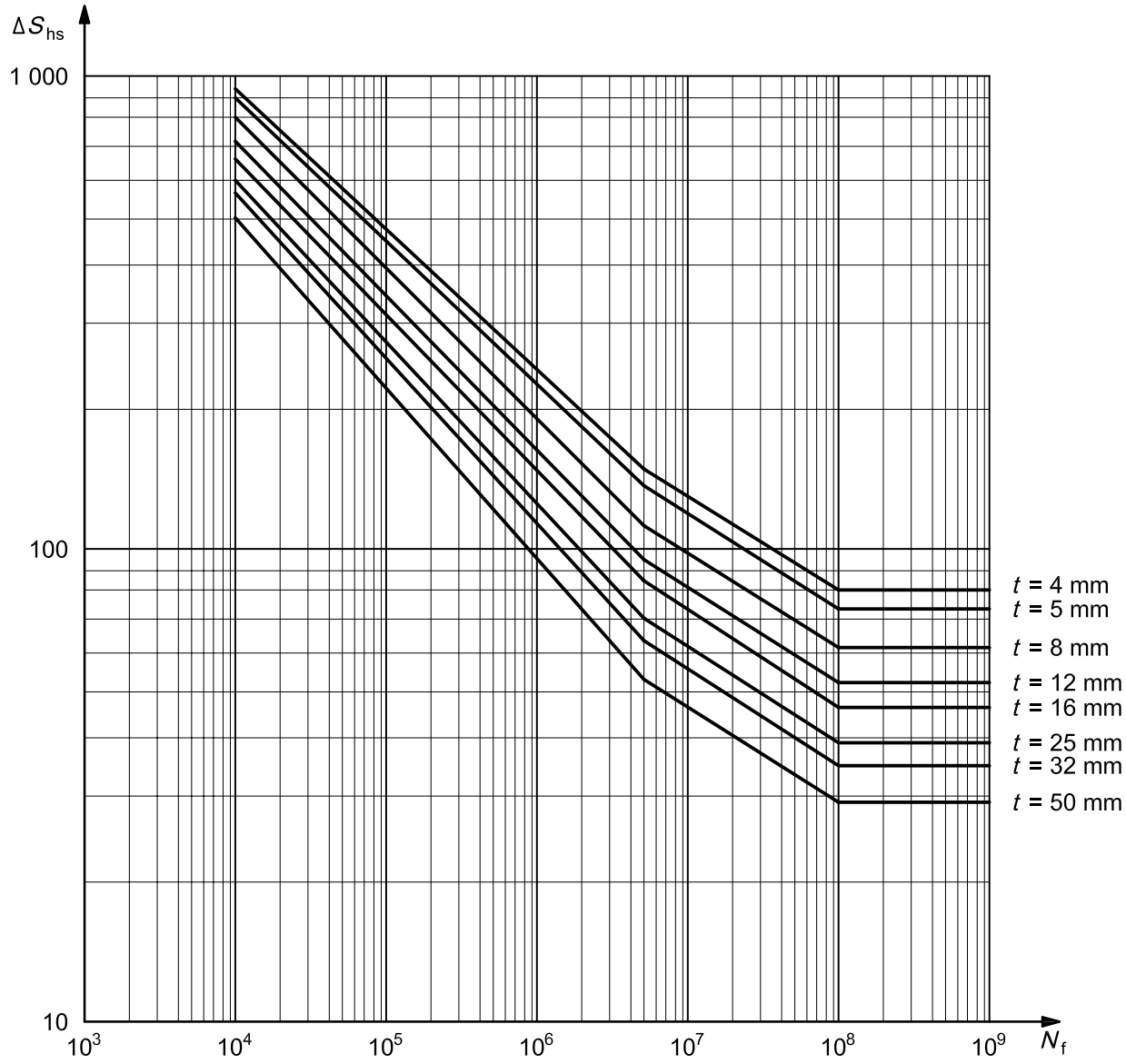

Key

ΔS_{hs} hot-spot stress range, MPa

N_f number of cycles to failure

t thickness of applicable member being checked for fatigue cracking:

a) for CHS joints: 4 mm $\leqslant t \leqslant$ 50 mm

b) for RHS joints: 4 mm $\leqslant t \leqslant$ 16 mm

Figure 7 — Fatigue strength curves

© ISO 2008 – All rights reserved

Documents
Document Sharing Hub

Full document details: BS ISO 14347:2008

Table 3 — Constant amplitude fatigue limit and cut-off limit in Figure 7

Section type	Thickness mm	Constant amplitude fatigue limit MPa	Cut-off limit MPa
CHS and RHS	4	147	81
	5	134	74
	8	111	61
	12	95	52
	16	84	46
CHS	25	71	39
	32	64	35
	50	53	29

9 SCF calculations for CHS joints

9.1 Uniplanar CHS T- and Y-joints

9.1.1 Hot-spot locations are given in Figure D.1.

9.1.2 Detailed SCF equations for uniplanar CHS T- and Y-joints are given in D.1.2.1 to D.1.2.4 for the load conditions defined in Figure D.2.

9.1.3 The factor C corresponds to the chord-end fixity. In the case of fully fixed chord ends, C is taken as 0,5. If the chord ends are pinned, C is taken as 1,0. A typical value for C is 0,7.

9.1.4 When the relative chord length, α, is less than 12, a correction factor is needed to take account of the reduced deformation and stresses in short chords, as shown in D.1.2.

9.1.5 In the case of a diameter or width ratio $\beta \geqslant 0{,}95$, use SCFs for $\beta = 0{,}95$.

9.1.6 The validity conditions for the graphs and equations are:

diameter or width ratio

$$0{,}2 \leqslant \beta \leqslant 1{,}0$$

chord slenderness

$$15 \leqslant 2\gamma \leqslant 64$$

wall thickness ratio

$$0{,}2 \leqslant \tau \leqslant 1{,}0$$

relative chord length

$$4 \leqslant \alpha \leqslant 40$$

acute angle between brace and chord axes

$$30° \leqslant \theta \leqslant 90°$$

© ISO 2008 – All rights reserved

Documents
Document Sharing Hub
Full document details: BS ISO 14347:2008