BRITISH STANDARD

BS ISO 1438:2008

*Incorporating corrigendum September 2008*

# Hydrometry — Open channel flow measurement using thin-plate weirs

ICS 17.120.20

NO COPYING WITHOUT BSI PERMISSION EXCEPT AS PERMITTED BY COPYRIGHT LAW

Document Sharing Hub
British Standards

Full document details: BS ISO 1438:2008

# National foreword

This British Standard is the UK implementation of ISO 1438:2008, incorporating corrigendum September 2008. It supersedes BS 3680-4A:1981 which is withdrawn.

The start and finish of text introduced or altered by corrigendum is indicated in the text by tags. Tags altered by ISO corrigendum September 2008 is indicated in the text by ⟦AC1⟩ ⟨AC1⟧.

The UK participation in its preparation was entrusted by Technical Committee CPI/113, Hydrometry, to Subcommittee CPI/113/2, Notches weirs and flumes.

A list of organizations represented on this subcommittee can be obtained on request to its secretary.

This publication does not purport to include all the necessary provisions of a contract. Users are responsible for its correct application.

**Compliance with a British Standard cannot confer immunity from legal obligations.**

This British Standard was published under the authority of the Standards Policy and Strategy Committee on 30 May 2008

© BSI 2010

ISBN 978 0 580 64610 2

**Amendments/corrigenda issued since publication**

| Date | Comments |
|---|---|
| 30 April 2010 | Implementation of ISO corrigendum September 2008 |
| | |
| | |
| | |

Documents
Document Sharing Hub

Full document details: BS ISO 1438:2008

# INTERNATIONAL STANDARD

# ISO 1438

Second edition
2008-04-15

## Hydrometry — Open channel flow measurement using thin-plate weirs

*Hydrométrie — Mesure de débit dans les canaux découverts au moyen de déversoirs à paroi mince*

Reference number
ISO 1438:2008(E)

Documents
Document Sharing Hub

Full document details: BS ISO 1438:2008

Documents
Document Sharing Hub

Full document details: BS ISO 1438:2008

## Contents

Page


Foreword ..... v

1 Scope ..... 1

2 Normative references ..... 1

3 Terms and definitions ..... 1

4 Symbols and abbreviated terms ..... 1

5 Principle ..... 2

6 Installation ..... 2
6.1 General ..... 2
6.2 Selection of site ..... 2
6.3 Installation conditions ..... 2

7 Measurement of head ..... 4
7.1 Head measuring devices ..... 4
7.2 Stilling or float well ..... 5
7.3 Head-measurement section ..... 5
7.4 Head-gauge datum (gauge zero) ..... 5

8 Maintenance ..... 6

9 Rectangular thin-plate weir ..... 6
9.1 Types ..... 6
9.2 Specifications for the standard weir ..... 8
9.3 Specifications for installation ..... 8
9.4 Determination of gauge zero ..... 8
9.5 Discharge formulae — General ..... 11
9.6 Formulae for the basic weir form (all values of $b/B$) ..... 11
9.7 Formulae for full-width weirs ($b/B = 1{,}0$) ..... 14

10 Triangular-notch thin-plate weir ..... 16
10.1 Specifications for the standard weir ..... 16
10.2 Specifications for the installation ..... 18
10.3 Specifications for head measurement ..... 18
10.4 Discharge formulae — General ..... 19
10.5 Formula for all notch angles between $\pi/9$ and $5\pi/9$ radians (20° and 100°) ..... 19
10.6 Formula for specific notch angles (fully-contracted weir) ..... 21
10.7 Accuracy of discharge coefficients — Triangular-notch weirs ..... 22

11 Uncertainties of flow measurement ..... 22
11.1 General ..... 22
11.2 Combining measurement uncertainties ..... 23
11.3 Uncertainty of discharge coefficient $u^*(C_d)$ for thin-plate weirs ..... 25
11.4 The uncertainty budget ..... 25

12 Example ..... 25
12.1 General ..... 25
12.2 Characteristics — Gauging structure ..... 26
12.3 Characteristics — Gauged head instrumentation ..... 26
12.4 Discharge coefficient ..... 26
12.5 Discharge estimate ..... 26
12.6 Uncertainty statement ..... 27

Annex A (informative) Flow measurement with small weir tanks ..... 29


Documents
Document Sharing Hub



Full document details: BS ISO 1438:2008

**Annex B** (informative) **Guide to the design and installation of a flow straightener** ..... 31

**Annex C** (informative) **Introduction to measurement uncertainty** ..... 33

**Annex D** (informative) **Sample measurement performance for use in hydrometric worked examples** ..... 41

**Annex E** (informative) **Specimen tables** ..... 43

**Bibliography** ..... 59



Documents
Document Sharing Hub

Full document details: BS ISO 1438:2008

## Foreword

ISO (the International Organization for Standardization) is a worldwide federation of national standards bodies (ISO member bodies). The work of preparing International Standards is normally carried out through ISO technical committees. Each member body interested in a subject for which a technical committee has been established has the right to be represented on that committee. International organizations, governmental and non-governmental, in liaison with ISO, also take part in the work. ISO collaborates closely with the International Electrotechnical Commission (IEC) on all matters of electrotechnical standardization.

International Standards are drafted in accordance with the rules given in the ISO/IEC Directives, Part 2.

The main task of technical committees is to prepare International Standards. Draft International Standards adopted by the technical committees are circulated to the member bodies for voting. Publication as an International Standard requires approval by at least 75 % of the member bodies casting a vote.

Attention is drawn to the possibility that some of the elements of this document may be the subject of patent rights. ISO shall not be held responsible for identifying any or all such patent rights.

ISO 1438 was prepared by Technical Committee ISO/TC 113, *Hydrometry*, Subcommittee SC 2, *Flow measurement structures*.

This second edition cancels and replaces the first edition (ISO 1438-1:1980), of which it constitutes a technical revision. It also incorporates the Amendment ISO 1438-1:1980/Amd 1:1988.

Documents
Document Sharing Hub



Full document details: BS ISO 1438:2008

*blank*

Documents
Document Sharing Hub

Full document details: BS ISO 1438:2008

# Hydrometry — Open channel flow measurement using thin-plate weirs

## 1 Scope

This International Standard defines the requirements for the use of rectangular and triangular (V-notch) thin-plate weirs for the measurement of flow of clear water in open channels under free flow conditions. It includes the requirements for the use of full-width rectangular thin-plate weirs in submerged (drowned) flow conditions.

## 2 Normative references

The following referenced documents are indispensable for the application of this document. For dated references, only the edition cited applies. For undated references, the latest edition of the referenced document (including any amendments) applies.

ISO 772, *Hydrometry — Vocabulary and symbols*

## 3 Terms and definitions

For the purposes of this document, the terms and definitions given in ISO 772 apply.

## 4 Symbols and abbreviated terms

| | | |
|---|---|---|
| $A$ | $m^2$ | area of approach channel |
| $B$ | m | width of approach channel |
| $b$ | m | measured width of the notch |
| $b_{max}$ | m | width of notch at maximum head (V-notch) |
| $C$ | | discharge coefficient (gauged head) |
| $C_d$ | | coefficient of discharge |
| $f$ | | drowned flow reduction factor |
| $fC$ | | combined coefficient of discharge |
| $C_v$ | | coefficient of velocity |
| $e_b$ | m | random uncertainty in the width measurement |
| $g$ | $m/s^2$ | acceleration due to gravity |
| $H$ | m | total head above crest level |
| $h$ | m | upstream gauged head above crest level (upstream head is inferred if no subscript is used) |
| $J$ | | numerical constant |
| $l$ | m | distance of the head measurement section upstream of the weir |
| $n$ | | number of measurements in a set |
| $p$ | m | height of the crest relative to the floor |
| $Q$ | $m^3/s$ | volumetric rate of flow |
| $S$ | | submergence ratio, $h_2/h_1$ |

Documents
Document Sharing Hub



Full document details: BS ISO 1438:2008

| | | |
|---|---|---|
| $S_1$ | | modular limit |
| $\bar{V}$ | m/s | mean velocity |
| $U$ | % | expanded percentage uncertainty |
| $u^*(b)$ | % | percentage uncertainty in $b$ |
| $u^*(C)$ | % | percentage uncertainty in $C$ |
| $u^*(E)$ | % | percentage uncertainty in datum measurement |
| $u^*(h_1)$ | % | percentage uncertainty in $h_1$ |
| $u^*(Q)$ | % | percentage uncertainty in $Q$ |
| $\alpha$ | ° | notch angle |

**Subscripts:**

1 upstream
2 downstream
e effective
r rectangular
t triangular

## 5 Principle

The discharge over thin-plate weirs is a function of the upstream head on the weir (for free-flow), upstream and downstream head (for drowned flow), the size and shape of the discharge area and an experimentally determined coefficient which takes into account the head, the geometrical properties of the weir and approach channel and the dynamic properties of the water.

## 6 Installation

### 6.1 General

General requirements of weir installations are described in the following clauses. Special requirements of different types of weirs are described in clauses which deal with specific weirs (see Clauses 9 and 10).

### 6.2 Selection of site

The type of weir to be used for discharge measurement is determined in part by the nature of the proposed measuring site. Under some conditions of design and use, weirs shall be located in rectangular flumes or in weir boxes which simulate flow conditions in rectangular flumes. Under other conditions, weirs may be located in natural channels as well as flumes or weir boxes, with no significant difference in measurement accuracy. Specific site-related requirements of the installation are described in 6.3.

### 6.3 Installation conditions

#### 6.3.1 General

Weir discharge is critically influenced by the physical characteristics of the weir and the weir channel. Thin-plate weirs are especially dependent on installation features which control the velocity distribution in the approach channel and on the construction and maintenance of the weir crest in meticulous conformance with standard specifications.



Documents
Document Sharing Hub
Full document details: BS ISO 1438:2008

### 6.3.2 Weir

Thin-plate weirs shall be vertical and perpendicular to the walls of the channel. The intersection of the weir plate with the walls and floor of the channel shall be watertight and firm, and the weir shall be capable of withstanding the maximum flow without distortion or damage.

Stated practical limits associated with different discharge formulae such as minimum width, minimum weir height, minimum head, and maximum values of $h/p$ and $b/B$ (where $h$ is the measured head, $p$ is the height of crest relative to floor, $b$ is the measured width of the notch and $B$ is the width of the approach channel), are factors which influence both the selection of weir type and the installation.

### 6.3.3 Approach channel

For the purposes of this International Standard, the approach channel is the portion of the weir channel which extends upstream from the weir a distance not less than 5 times the width of the nappe at maximum head. If the weir is located in a weir tank, ideally the length of the tank should equal to 10 times the width of the nappe at maximum head. Information on the use of small weir tanks is given in Annex A.

The flow in the approach channel shall be uniform and steady, with the velocity distribution approximating that in a channel of sufficient length to develop satisfactory flow in smooth, straight channels. Figure 1 shows measured velocity distributions perpendicular to the direction of flow in rectangular channels, upstream from the influence of a weir. Baffles and flow straighteners can be used to simulate satisfactory velocity distribution, but their location with respect to the weir shall be not less than the minimum length prescribed for the approach channel.

The influence of approach-channel velocity distribution on weir flow increases as $h/p$ and $b/B$ increase in magnitude. If a weir installation unavoidably results in a velocity distribution that is appreciably non-uniform, the possibility of error in calculated discharge should be checked by means of an alternative discharge-measuring method for a representative range of discharges.

If the approach conditions are judged to be unsatisfactory, then flow straighteners shall be introduced in accordance with Annex B.

[AC1] If the maximum head to be measured is restricted to $(2/3)p$ for all types of weirs, flow straighteners can be used to reduce the effective length of the approach channel to $B + 3h_{max}$ for triangular and rectangular weirs and to $B + 5h_{max}$ for full width weirs.

NOTE This restriction is necessary due to the distortion of the velocity distribution in the approach channel that results from an overflow of each baffle of the straightener if the head on the weir is too high. [AC1]



Documents
Document Sharing Hub
Full document details: BS ISO 1438:2008

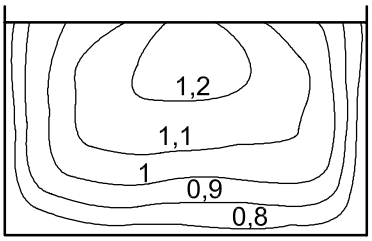


a)

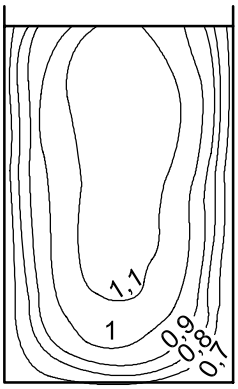


b)

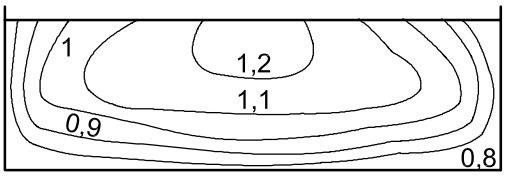


c)

NOTE The contours refer to values of local flow velocity relative to the mean cross-sectional velocity.

**Figure 1 — Examples of normal velocity distribution in rectangular channels**

### 6.3.4 Downstream channel

For most applications, the level of the water in the downstream channel shall be a sufficient vertical distance below the crest to ensure free, fully ventilated discharges. Free (non-submerged) discharge occurs when the discharge is independent of the downstream water level. Fully ventilated discharge is ensured when the air pressure on the lower surface of the nappe is fully ventilated. Drowned flow operation is permitted for full width weirs under certain conditions (see 9.7.2). Under these circumstances, downstream water levels may rise above crest level.

## 7 Measurement of head

### 7.1 Head measuring devices

In order to obtain the discharge measurement accuracies specified for the standard weirs, the head on the weir shall be measured with a laboratory-grade hook gauge, point gauge, manometer, or other gauge of equivalent accuracy. For a continuous record of head variants, precise float gauges and servo-operated point gauges can be used. Staff and tape gauges can be used when less accurate measurements are acceptable.

Additional specifications for head-measuring devices are given in ISO 4373 [1].



Documents
Document Sharing Hub
Full document details: BS ISO 1438:2008

## 7.2 Stilling or float well

For the exceptional case where surface velocities and disturbances in the approach channel are negligible, the headwater level can be measured directly (for example, by means of a point gauge mounted over the water surface). Generally, however, to avoid water-level variations caused by waves, turbulence or vibration, the headwater level should be measured in a separate stilling well.

Separate stilling wells are connected to the approach channel by means of a suitable conduit, equipped if necessary with a throttle valve to damp oscillations. At the channel end of the conduit, the connection is made to floor or wall piezometers or a static tube at the head-measurement section.

Additional specifications for stilling wells are given in ISO 1100-1 [2].

## 7.3 Head-measurement section

### 7.3.1 Upstream head-measurement

The head-measurement section shall be located a sufficient distance upstream from the weir to avoid the region of surface drawdown caused by the formation of the nappe. On the other hand, it shall be sufficiently close to the weir that the energy loss between the head-measurement section and the weir is negligible. For the weirs included in this International Standard, the location of the head-measurement section will be satisfactory if it is at a distance equal to 2 to 4 times the maximum head ($2h_{max}$ to $4h_{max}$) upstream from the weir.

If high velocities occur in the approach channel or if water-surface disturbances or irregularities occur at the head-measurement section because of high values of $h/p$ or $b/B$, it may be necessary to install several pressure intakes to ensure that the head measured in the gauge well is representative of the average head across the measurement section.

In the case of a full-width thin-plate weir, the effect of frictional effects upon the upstream channel requires an adjustment to the standard coefficient of discharge. The correction is in terms of both $l/h$ and $h/p$ and given in Table 1.

**Table 1 — Factors to be applied to the standard discharge coefficient values**

| $h/p$ | $l/h$ | | | |
|---|---|---|---|---|
| | 2 | 4 | 6 | 8 |
| **3,5 to 4,0** | 1,00 | 1,00 | 0,96 | 0,92 |
| **3,0 to 3,5** | 1,00 | 1,00 | 0,97 | 0,94 |
| **2,5 to 3,0** | 1,00 | 1,00 | 0,98 | 0,96 |
| **2,0 to 2,5** | 1,00 | 1,00 | 0,99 | 0,98 |
| **Less than 2,0** | 1,00 | 1,00 | 1,00 | 1,00 |

### 7.3.2 Downstream head measurement

If the weir is to be operated in the submerged (drowned) flow range, a measurement of downstream head is required in addition to that upstream. The downstream head measurement position shall be 10 $h_{max}$ downstream from the upstream face of the weir. If a stilling well is included in the design, it is recommended that the downstream head measurement be located no closer to the weir than 4 $h_{max}$.

## 7.4 Head-gauge datum (gauge zero)

Accuracy of head measurements is critically dependent upon the determination of the head-gauge datum or gauge zero, which is defined as the gauge reading corresponding to the level of the weir crest (rectangular

Documents
Document Sharing Hub



Full document details: BS ISO 1438:2008

weirs) or the level of the vertex of the notch (triangular-notch weirs). When necessary, the gauge zero shall be checked. Numerous acceptable methods of determining the gauge zero are in use. Typical methods are described in subsequent clauses dealing specifically with rectangular and triangular weirs. (See Clauses 9 and 10.)

Because of surface tension, the gauge zero cannot be determined with sufficient accuracy by reading the head gauge with the water in the approach channel drawn down to the apparent crest (or notch) level.

## 8 Maintenance

Maintenance of the weir and the weir channel is necessary to ensure accurate measurements.

The approach channel shall be kept free of silt, vegetation and obstructions which might have deleterious effects on the flow conditions specified for the standard installation. The downstream channel shall be kept free of obstructions which might cause submergence or inhibit full ventilation of the nappe under all conditions of flow.

The weir plate shall be kept clean and firmly secured. In the process of cleaning, care shall be taken to avoid damage to the crest or notch, particularly the upstream edges and surfaces. Construction specifications for these most sensitive features should be reviewed before maintenance is undertaken.

Head-measurement piezometers, connecting conduits and the stilling well shall be cleaned and checked for leakage. The hook or point gauge, manometer, float or other instrument used to measure the head shall be checked periodically to ensure accuracy.

If a flow straightener is used in the approach channel, perforated plates shall be kept clean so that the percentage open area remains greater than 40 %.

## 9 Rectangular thin-plate weir

### 9.1 Types

The rectangular thin-plate weir is a general classification in which the rectangular-notch weir is the basic form and the full-width weir is a limiting case. A diagrammatic illustration of the basic weir form is shown in Figure 2 with intermediate values of $b/B$ and $h/p$. When $b/B = 1{,}0$, that is when the width of the weir ($b$) is equal to the width of the channel at the weir section ($B$), the weir is of full-width type (also referred to as a “suppressed” weir, because its nappe lacks side contractions).



Documents
Document Sharing Hub
Full document details: BS ISO 1438:2008

Dimensions in millimetres

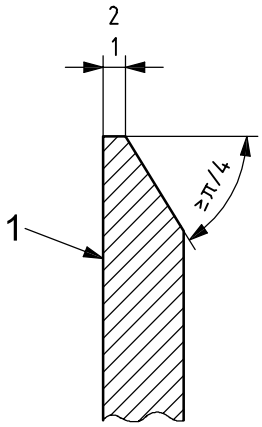


a)

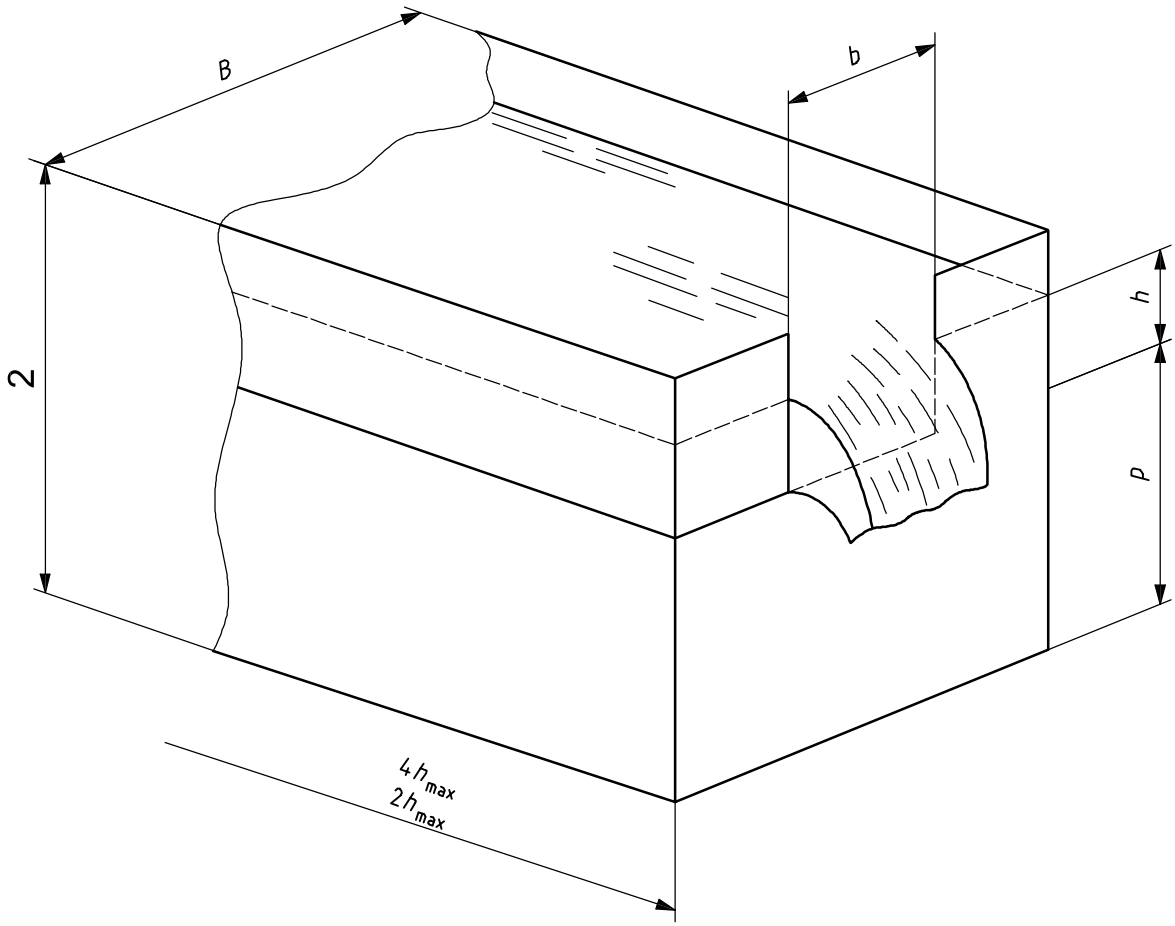


b)

**Key**

1 upstream face of weir plate

2 head measurement section, $h_1$

**Figure 2 — Rectangular-notch, thin-plate weir**



Documents
Document Sharing Hub
Full document details: BS ISO 1438:2008

## 9.2 Specifications for the standard weir

The basic weir form consists of a rectangular notch in a vertical, thin plate. The plate shall be plane and rigid and perpendicular to the walls and the floor of the approach channel. The upstream face of the plate shall be smooth (in the vicinity of the notch it shall be equivalent in surface finish to that of rolled sheet-metal).

The vertical bisector of the notch shall be equidistant from the two walls of the channel. The crest surface of the notch shall be a horizontal, plane surface, which shall form a sharp edge at its intersection with the upstream face of the weir plate. The width of the crest surface, measured perpendicular to the face of the plate, shall be between 1 mm and 2 mm. The side surfaces of the notch shall be vertical, plane surfaces which shall make sharp edges at their intersection with the upstream face of the weir plate. For the limiting case of the full-width weir, the crest of the weir shall extend to the walls of the channel, which in the vicinity of the crest shall be plane and smooth (see also 9.3).

To ensure that the upstream edges of the crest and the sides of the notch are sharp, they shall be machined or filed, perpendicular to the upstream face of the weir plate, free of burrs or scratches and untouched by abrasive cloth or paper. The downstream edges of the notch shall be chamfered if the weir plate is thicker than the maximum allowable width of the notch surface. The surface of the chamfer shall make an angle of not less than $\pi/4$ radians (45°) with the crest and side surfaces of the notch (see detail, Figure 2). The weir plate in the vicinity of the notch preferably shall be made of corrosion-resistant metal; but if it is not, all specified smooth surfaces and sharp edges shall be kept coated with a thin, protective film (for example, oil, wax, silicone) applied with a soft cloth.

## 9.3 Specifications for installation

The specifications stated in 6.3 shall apply. In general, the weir shall be located in a straight, horizontal, rectangular approach channel if possible. However, if the effective opening of the notch is so small in comparison with the area of the upstream channel that the approach velocity is negligible, the shape of the channel is not significant. In any case, the flow in the approach channel shall be uniform and steady, as specified in 6.3.3.

If the width of the weir is equal to the width of the channel at the weir section (i.e. a full-width weir), the sides of the channel upstream from the plane of the weir shall be vertical, plane, parallel and smooth (equivalent in surface finish to that of rolled sheet-metal). The sides of the channel above the level of the crest of a full-width weir shall extend at least 0,3 $h_{max}$ downstream from the plane of the weir. Fully ventilated discharge shall be ensured as specified in 6.3.4.

The approach channel floor shall be smooth, flat and horizontal when the height of the crest relative to the floor ($p$) is small and/or $h/p$ is large. For rectangular weirs, the floor should be smooth, flat and horizontal, particularly when $p$ is less than 0,1 m and/or $h_{max}/p$ is greater than 1. Additional conditions are specified in connection with the recommended discharge formulae.

## 9.4 Determination of gauge zero

The head-gauge datum or gauge zero shall be determined with great care, and it shall be checked when necessary. A typical, acceptable method of determining the gauge zero for rectangular weirs is described as follows.

a) Still water in the approach channel is drawn to a level below the weir crest.

b) A temporary hook gauge is mounted over the approach channel, a short distance upstream from the weir crest.

c) A precise machinists' level is placed with its axis horizontal, with one end lying on the weir crest and the other end on the point of the temporary hook gauge (the gauge having been adjusted to hold the level in this position). The reading of the temporary gauge is recorded.



Documents
Document Sharing Hub
Full document details: BS ISO 1438:2008

d) The temporary hook gauge is lowered to the water surface in the approach channel and its reading is recorded. The permanent gauge is adjusted to read the level in the gauge well, and this reading is recorded.

e) The computed difference between the two readings of the temporary gauge is added to the reading of the permanent gauge. The sum is the gauge zero for the permanent gauge.

Figure 3 illustrates the use of this procedure with a form of temporary hook gauge which is conveniently mounted on the weir plate.

Documents
Document Sharing Hub



Full document details: BS ISO 1438:2008

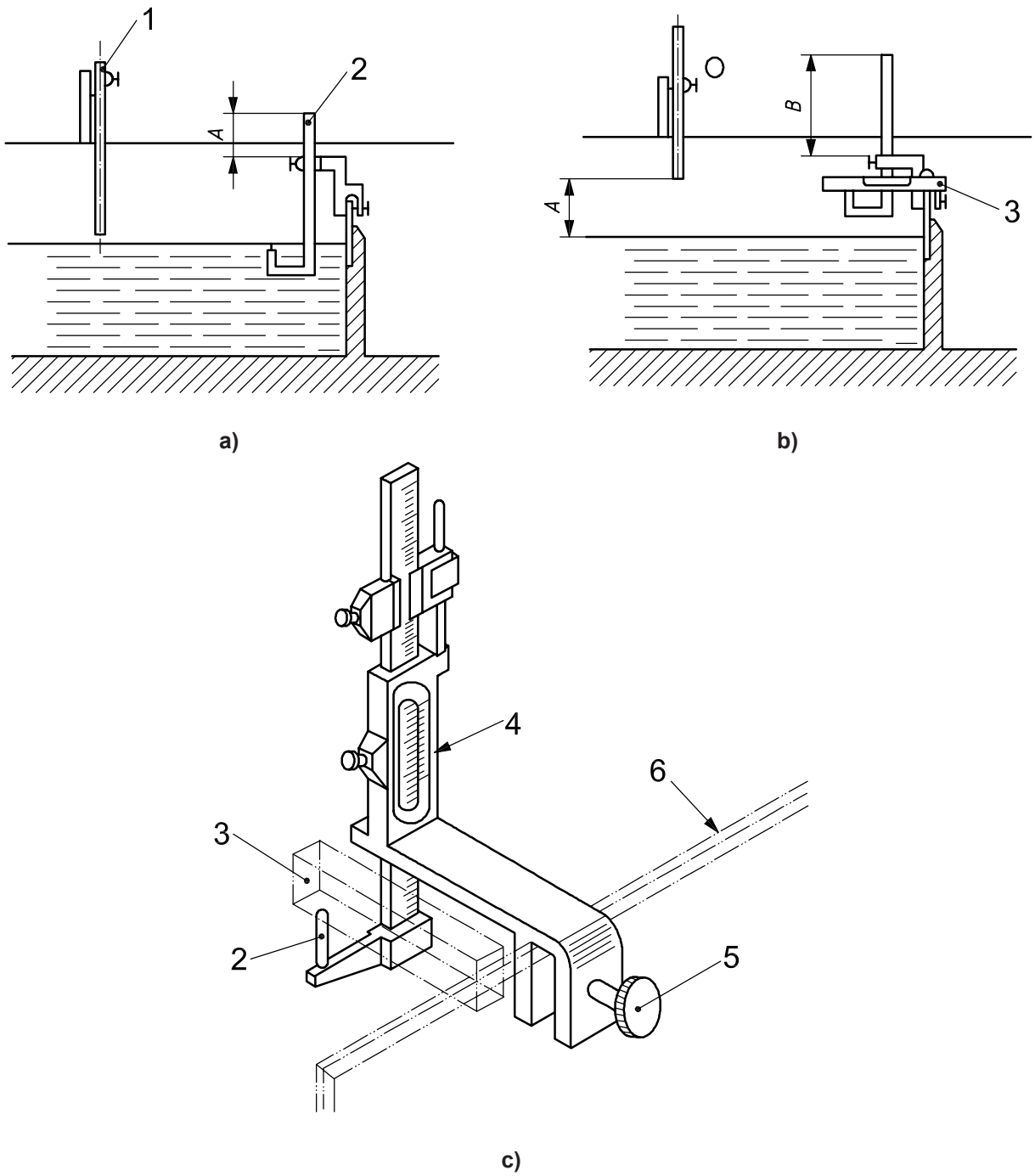


**Key**

1 permanent gauge
2 temporary hook gauge
3 precision level
4 vernier micrometer
5 set screw
6 weir crest

**Figure 3 — Determination of gauge zero for rectangular weir**



Documents
Document Sharing Hub
Full document details: BS ISO 1438:2008

## 9.5 Discharge formulae — General

Recommended discharge formulae for rectangular thin-plate weirs are presented in three categories:

a) modular discharge equation for the basic weir form (all values of $b/B$);

b) modular discharge equation for full-width weirs ($b/B = 1{,}0$);

c) non-modular discharge equation for full-width weirs.

## 9.6 Formulae for the basic weir form (all values of $b/B$)

### 9.6.1 Kindsvater-Carter formula

The Kindsvater-Carter formula for the basic weir form is:

$$Q = C_\mathrm{d} \frac{2}{3} \sqrt{2g}\, b_\mathrm{e} h_\mathrm{e}^{3/2} \tag{1}$$

where

$C_\mathrm{d}$ is the coefficient of discharge;

$b_\mathrm{e}$ is the effective width;

$h_\mathrm{e}$ is the effective head.

#### 9.6.1.1 Evaluation of $C_\mathrm{d}$, $k_b$ and $k_h$

Figure 4 shows experimentally determined values of $C_\mathrm{d}$ as a function of $h/p$ for representative values of $b/B$. Values of $C_\mathrm{d}$ for intermediate values of $b/B$ can be determined by interpolation.

The coefficient of discharge $C_\mathrm{d}$ has been determined by experiment as a function of two variables from the formula:

$$C_\mathrm{d} = f\left(\frac{b}{B}, \frac{h}{p}\right) \tag{2}$$

The effective width and head are defined by Equations (3) and (4):

$$b_\mathrm{e} = b + k_b \tag{3}$$

$$h_\mathrm{e} = h + k_h \tag{4}$$

in which $k_b$ and $k_h$ are experimentally determined quantities, in metres, which compensate for the combined effects of viscosity and surface tension.



Documents
Document Sharing Hub
Full document details: BS ISO 1438:2008

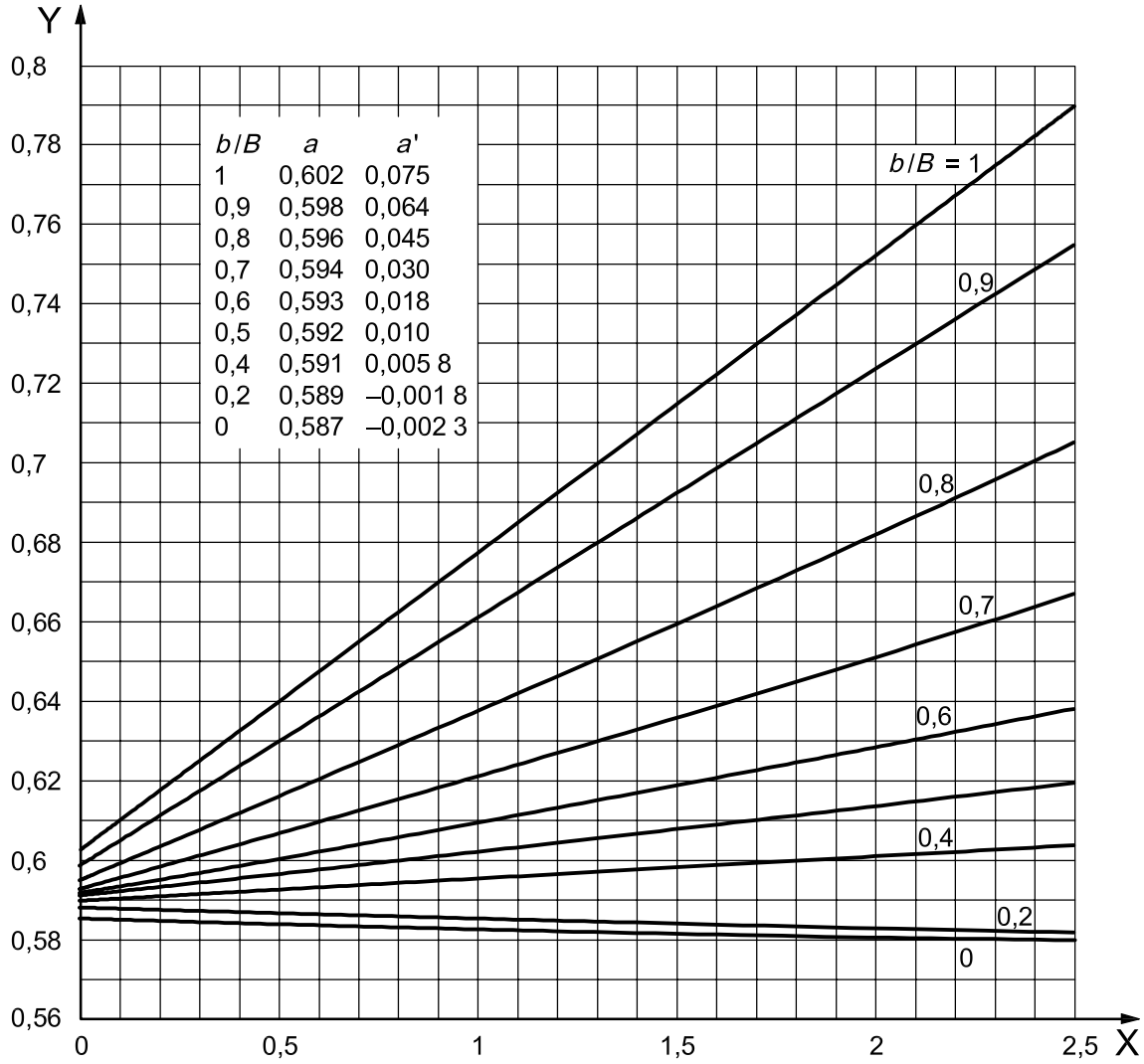


**Key**

X value of $\frac{h}{p}$

Y value of $C_d$

**Figure 4 — Coefficient of discharge** $C_d = a + a'\left(\frac{h}{p}\right)$

Figure 5 shows values of $k_b$, which have been experimentally determined as a function of $b/B$.

Experiments have shown that $k_h$ can be taken to have a constant value of 0,001 m for weirs constructed in strict conformance with recommended specifications.



Documents
Document Sharing Hub
Full document details: BS ISO 1438:2008

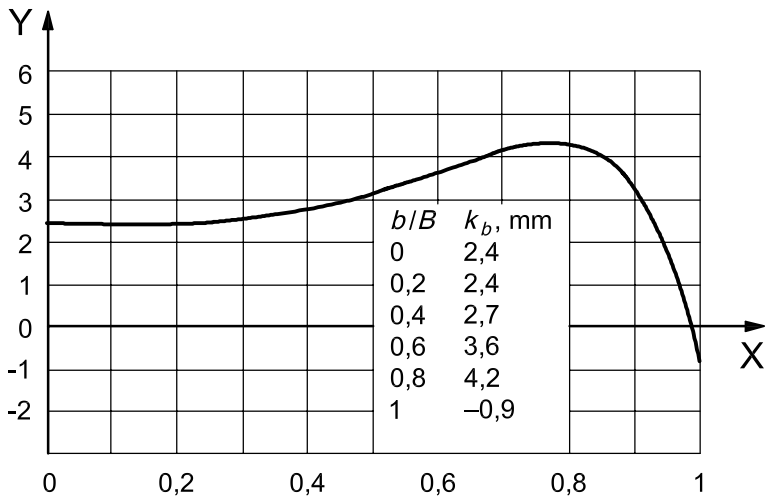


**Key**

X $b/B$

Y $k_b$, in millimetres

**Figure 5 — Value of $k_b$ related to $b/B$**

#### 9.6.1.2 Formulae for $C_d$

For specific values of $b/B$, the relationship between $C_d$ and $h/p$ has been shown by experiment (see Figure 4) to be of the linear form $C_d = a + a'\left(\frac{h}{p}\right)$.

Thus, for the values of $b/B$ shown on Figure 4, formulae for $C_d$ can be written as follows:

$$\left(\frac{b}{B} = 1{,}0\right): C_d = 0{,}602 + 0{,}075\frac{h}{p} \quad (5)$$

$$\left(\frac{b}{B} = 0{,}9\right): C_d = 0{,}598 + 0{,}064\frac{h}{p} \quad (6)$$

$$\left(\frac{b}{B} = 0{,}8\right): C_d = 0{,}596 + 0{,}045\frac{h}{p} \quad (7)$$

$$\left(\frac{b}{B} = 0{,}7\right): C_d = 0{,}594 + 0{,}030\frac{h}{p} \quad (8)$$

$$\left(\frac{b}{B} = 0{,}6\right): C_d = 0{,}593 + 0{,}018\frac{h}{p} \quad (9)$$

$$\left(\frac{b}{B} = 0{,}5\right): C_d = 0{,}592 + 0{,}010\frac{h}{p} \quad (10)$$

$$\left(\frac{b}{B} = 0{,}4\right): C_d = 0{,}591 + 0{,}005\,8\frac{h}{p} \quad (11)$$

AVA Documents
Document Sharing Hub



Full document details: BS ISO 1438:2008