BS ISO 14649-13:2013

BSI Standards Publication

Automation systems and integration — Physical device control — Data model for computerized numerical controllers

Part 13: Process data for wire electrical discharge machining (wire-EDM)

Documents
Document Sharing Hub

Full document details: BS ISO 14649-13:2013

National foreword

This British Standard is the UK implementation of ISO 14649-13:2013.

The UK participation in its preparation was entrusted to Technical Committee AMT/4, Industrial data and manufacturing interfaces.

A list of organizations represented on this committee can be obtained on request to its committee manager.

Contractual and legal considerations

This publication has been prepared in good faith, however no representation, warranty, assurance or undertaking (express or implied) is or will be made, and no responsibility or liability is or will be accepted by BSI in relation to the adequacy, accuracy, completeness or reasonableness of this publication. All and any such responsibility and liability is expressly disclaimed to the full extent permitted by the law.

This publication is provided as is, and is to be used at the recipient's own risk.

The recipient is advised to consider seeking professional guidance with respect to its use of this publication.

This publication is not intended to constitute a contract. Users are responsible for its correct application.

© The British Standards Institution 2023
Published by BSI Standards Limited 2023

ISBN 978 0 580 66973 6

ICS 25.040.20

Compliance with a British Standard cannot confer immunity from legal obligations.

This British Standard was published under the authority of the Standards Policy and Strategy Committee on 31 March 2023.

Amendments/corrigenda issued since publication

Date	Text affected

Documents
Document Sharing Hub

Full document details: BS ISO 14649-13:2013

INTERNATIONAL STANDARD

ISO 14649-13

First edition
2013-03-01

Automation systems and integration — Physical device control — Data model for computerized numerical controllers —

Part 13: Process data for wire electrical discharge machining (wire-EDM)

Systèmes d'automatisation et intégration — Commande des dispositifs physiques — Modèle de données pour les contrôleurs numériques informatisés —

Partie 13: Données de procédé pour l'usinage de fils électriques (fils EDM)

Reference number
ISO 14649-13:2013(E)

Documents
Document Sharing Hub

© ISO 2013

Full document details: BS ISO 14649-13:2013

COPYRIGHT PROTECTED DOCUMENT

© ISO 2013

All rights reserved. Unless otherwise specified, no part of this publication may be reproduced or utilized otherwise in any form or by any means, electronic or mechanical, including photocopying, or posting on the internet or an intranet, without prior written permission. Permission can be requested from either ISO at the address below or ISO's member body in the country of the requester.

ISO copyright office
Case postale 56 • CH-1211 Geneva 20
Tel. + 41 22 749 01 11
Fax + 41 22 749 09 47
E-mail copyright@iso.org
Web www.iso.org

Published in Switzerland

© ISO 2013 – All rights reserved

Documents
Document Sharing Hub

Full document details: BS ISO 14649-13:2013

Contents

Page

Foreword ..... **iv**
Introduction ..... **v**
1 Scope **1**
2 Normative references **1**
3 Terms and definitions **1**
4 Process data for wire-EDM **2**
4.1 Header and references 2
4.2 Manufacturing features for wire-EDM 2
4.3 Additional types and entities 7
4.4 Machining operation for wire-EDM 8
Annex A (informative) **EXPRESS listing** **15**
Annex B (informative) **EXPRESS-G** **18**
Annex C (informative) **Simple wire-EDM example 1** **27**
Annex D (informative) **Simple wire-EDM example 2** **30**
Bibliography **33**

© ISO 2013 – All rights reserved

Documents
Document Sharing Hub
Full document details: BS ISO 14649-13:2013

Foreword

ISO (the International Organization for Standardization) is a worldwide federation of national standards bodies (ISO member bodies). The work of preparing International Standards is normally carried out through ISO technical committees. Each member body interested in a subject for which a technical committee has been established has the right to be represented on that committee. International organizations, governmental and non-governmental, in liaison with ISO, also take part in the work. ISO collaborates closely with the International Electrotechnical Commission (IEC) on all matters of electrotechnical standardization.

The procedures used to develop this document and those intended for its further maintenance are described in the ISO/IEC Directives, Part 1. In particular the different approval criteria needed for the different types of ISO documents should be noted. This document was drafted in accordance with the editorial rules of the ISO/IEC Directives, Part 2. www.iso.org/directives

Attention is drawn to the possibility that some of the elements of this document may be the subject of patent rights. ISO shall not be held responsible for identifying any or all such patent rights. Details of any patent rights identified during the development of the document will be in the Introduction and/or on the ISO list of patent declarations received. www.iso.org/patents

Any trade name used in this document is information given for the convenience of users and does not constitute an endorsement.

The committee responsible for this document is Technical Committee ISO/TC 184, *Automation systems and integration*, Subcommittee SC 1, *Physical device control*.

ISO 14649 consists of the following parts, under the general title *Automation systems and integration — Physical device control — Data model for computerized numerical controllers*:

— *Part 1: Overview and fundamental principles*

— *Part 10: General process data*

— *Part 11: Process data for milling*

— *Part 12: Process data for turning*

— *Part 13: Process data for wire electrical discharge machining (wire-EDM)*

— *Part 14: Process data for sink electrical discharge machining (sink-EDM)*

— *Part 111: Tools for milling machines*

— *Part 121: Tools for turning machines*

— *Part 201: Machine tool data for cutting processes* [Technical Specification]

Gaps in numbering were intentionally left in order to allow further additions. ISO 14649-10 is the ISO 10303 Application Reference Model (ARM) for process-independent data. ISO 10303 ARMs for specific technologies are added after ISO 14649-10. ISO 14649 is harmonized with ISO 10303 in the common field of Product Data over the whole life cycle. ISO 14649-1 describes the different fields of standardization between ISO 14649, ISO 10303 and CNC manufacturers with respect to implementation and software development.

© ISO 2013 – All rights reserved
Documents
Document Sharing Hub
Full document details: BS ISO 14649-13:2013

Introduction

ISO 14649-10 describes the general process data for numerical controlled machining and includes its schema. The subject of this schema (called machining_schema) is the definition of data types, which are generally relevant for different technologies (e.g. milling, turning, wire-EDM). It includes the definition of the workpiece, a feature catalogue containing features, which might be referenced by several technologies, the general executables and the basis for an operation definition. Not included in this schema are geometric items and presentations, which are referenced from the generic resources of ISO 10303, and the technology-specific definitions, which are defined in separate parts of ISO 14649.

ISO 14649-10 is not a stand-alone standard. Its implementation needs at least one additional technology-specific part (e.g. ISO 14649-11 for milling). This part of ISO 14649 describes wire Electrical Discharging Machining (wire-EDM) and it defines technology-specific data types representing the machining process for wire-EDM.

The main text of this part of ISO 14649 provides definitions and explanations of the data entities needed to provide control data information to an EDM controller.

The EXPRESS forms of the entities are given again in Annex A without the explanatory text for information.

Annex B provides an alternative view of these entities, with the different figures showing graphical representations of different elements. These figures are purely informative: a detailed explanation of the entities in the figures is given in the corresponding text definitions in Clause 4.

Two examples of ISO 14649 files, providing illustrations of possible uses, are given in Annex C and Annex D.

In addition, the schema uses machining features similar to ISO 10303-224. The description of process data is carried out using EXPRESS language as defined in ISO 10303-11. The encoding of the data is carried out using ISO 10303-21.

© ISO 2013 – All rights reserved

Documents
Document Sharing Hub
Full document details: BS ISO 14649-13:2013

Documents
Document Sharing Hub

Automation systems and integration — Physical device control — Data model for computerized numerical controllers —

Part 13:
Process data for wire electrical discharge machining (wire-EDM)

1 Scope

This part of ISO 14649 specifies the technology-specific data element needed as process data for wire-EDM. Together with the general process data described in ISO 14649-10, it describes the interface between computerized numerical controller and the programming system (i.e. CAM system or shop-floor programming system) for wire-EDM. It can be used for wire-EDM operations on this kind of machine.

The scope of this part of ISO 14649 does not include tools for any other technologies (e.g. turning, grinding). Tools for these technologies are described in other parts of ISO 14649.

2 Normative references

The following documents, in whole or in part, are normatively referenced in this document and are indispensable for its application. For dated references, only the edition cited applies. For undated references, the latest edition of the referenced document (including any amendments) applies.

ISO 14649-10, *Industrial automation systems and integration — Physical device control — Data model for computerized numerical controllers — Part 10: General process data*

3 Terms and definitions

For the purposes of this document, the terms and definitions given in ISO 14649-10 and the following apply.

3.1
roughing
machining operation used to cut a part

Note 1 to entry: While the aim of roughing is to remove large quantities of material in a short time, the surface quality is usually not important.

Note 2 to entry: The roughing operation is usually followed by the *finishing* (3.2) operation.

3.2
finishing
machining operation whose aim is to reach the tolerance of the feature required

Note 1 to entry: The finishing operation is usually preceded by the *roughing* (3.1) operation and followed by the *surface finishing* (3.3) operation.

3.3
surface finishing
machining operation whose aim is to reach the required surface quality

Note 1 to entry: The surface finishing operation is usually preceded by the *finishing* (3.3) operation.

AVA Documents
Document Sharing Hub

© ISO 2013 – All rights reserved

Full document details: BS ISO 14649-13:2013

4 Process data for wire-EDM

4.1 Header and references

The following listing gives the header and the list of entities that are referenced within this schema.

```
SCHEMA wire_edm_schema;
(*
Version 5 of Feb 28, 2003
Author: Gabor Erdos <gabor.erdos@epfl.ch>
Modified by: Willy Maeder <wmaeder@cadcamation.ch>
Jacques Richard <i-tech@eig.unige.ch>
*)
REFERENCE FROM machining_schema (*ISO 14649-10*)
(
bounded_curve,
cartesian_point,
direction,
identifier,
label,
length_measure,
machine_functions,
machining_operation,
machining_feature,
machining_tool,
material,
pressure_measure,
property_parameter,
speed_measure,
plane_angle_measure,
technology,
machining_strategy,
toolpath_list
);
```

4.2 Manufacturing features for wire-EDM

4.2.1 General

The wire-EDM features defined in this subclause are the features that are specific for wire-EDM technology, and are not defined in ISO 14649-10. The base class for all wire-EDM features is the machining_feature, defined in ISO 14649-10.

4.2.2 General_path

The most general 4-axis wire-EDM operation is a manufacturing feature described by a ruled surface, but in many cases a curve based feature description is sufficient. The general_path feature is characterized by the fact that the tool movements are curve driven.

The general_path feature can be specified in two ways:

a) by one curve, an optional side angle and an optional transition type;

b) defined by two synchronized curves.

```
ENTITY general_path
SUPERTYPE OF (ONEOF(general_single_path, general_twin_path))
SUBTYPE OF (machining_feature);
END_ENTITY;
```

4.2.3 General_single_path

The general_single_path (see Figure 1) is defined by a general 2D or 3D curve with a slope angle specification and some specific parameters. The 2-axis wire-EDM operation, which is very usual, is a particular case of general_single_path where the slope angle is equal to 0 degrees.

© ISO 2013 – All rights reserved
Documents
Document Sharing Hub
Full document details: BS ISO 14649-13:2013

```
ENTITY general_single_path
SUBTYPE OF (general_path);
feature_principal_boundary: bounded_curve;
slope: OPTIONAL plane_angle_measure;
transition_types: OPTIONAL EDM_transition;
END_ENTITY;
```

feature_principal_boundary: The outline or shape that forms the principal edge of the general_path. When travelling along the curve base as defined by its sense, the material lies on the left side of the curve according to the axis2_placement_3d orientation (i.e. when projecting the curve in the local xy plane). It is the axis2_placement_3d inherited from the machining_feature that defines the local z-axis and the local xy plane. IF “x_+3” “<Tbl_no_borders>” “” <Tbl_no_borders> IF “x_-3” “</Tbl_no_borders>” “” </Tbl_no_borders>

slope: Optional angle of the border of the general_path measured against the local z-axis. Default is 0 degree. Implicitly a secondary curve boundary is defined: this is done by extending a line from each point on the principal boundary curve, at the specified angle, until it intersects the secondary local plane at the distance depth along the negative local z-axis. The shape of this implicit secondary boundary is also governed by the transition_types.

transition_types: The type of transition between non-tangent segments.

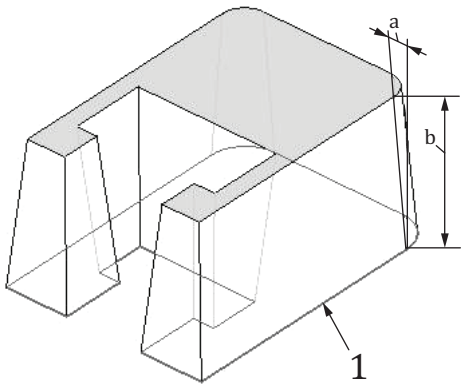

Key

1 feature_principal_boundary

a slope

b depth

Figure 1 — General_single_path

4.2.4 General_twin_path

The general_twin_path is defined by two general 2D or 3D curves. The two curves are synchronized by the curve parameterization. This means that the side wall is defined by connecting the points on the principal and the secondary boundary curves corresponding to the same parameter value with a line. The depth attribute defined in the machining_feature is not useful for this definition and is ignored.

```
ENTITY general_twin_path
SUBTYPE OF (general_path);
```

© ISO 2013 – All rights reserved

Documents
Document Sharing Hub
Full document details: BS ISO 14649-13:2013

```
feature_principal_boundary: bounded_curve;
feature_secondary_boundary: bounded_curve;
END_ENTITY;
```

feature_principal_boundary: The outline or shape that forms the principal edge of the general_path. When travelling along the curve base as defined by its sense, the material lies on the left side of the curve according to the axis2_placement_3d defined in the machining_feature (see Figure 2). IF “x_+3” “<Tbl_no_borders>” “” <Tbl_no_borders> IF “x_-3” “</Tbl_no_borders>” “” </Tbl_no_borders>

feature_secondary_boundary: The outline or shape that forms the secondary edge of the general_path.

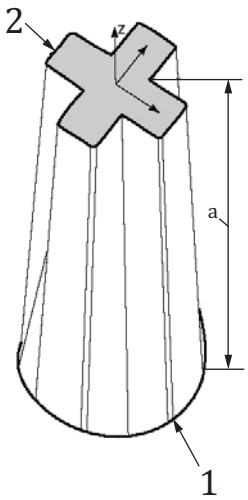

Key

1 feature_principal_boundary

2 feature_secondary_boundary

a depth

Figure 2 — General_twin_path

4.2.5 General_path_pocket

This is the abstract base class for wire-EDM pockets. Derived from this base class are closed pockets and open pockets. The geometry of the pocket is defined with a general path. The pocket may possess one or more bosses.

```
ENTITY general_path_pocket
ABSTRACT SUPERTYPE OF (ONEOF(general_path_closed_pocket, general_path_open_pocket))
SUBTYPE OF (machining_feature);
its_hole: SET [0:?] OF general_path;
END_ENTITY;
```

its_hole: Optional list of general_path entities which define the outline of the holes. This defines one or more parts of the pocket which are not cut during manufacturing of the pocket. When cutting the pocket the hole(s) is(are) cut simultaneously. IF “x_+3” “<Tbl_no_borders>” “” <Tbl_no_borders> IF “x_-3” “</Tbl_no_borders>” “” </Tbl_no_borders>

© ISO 2013 – All rights reserved
Documents
Document Sharing Hub
Full document details: BS ISO 14649-13:2013

4.2.6 General_path_closed_pocket

Derived from the class general_path_pocket, a general_path_closed_pocket (see Figure 3) is a general_path_pocket that is surrounded by material everywhere along its circumference.

```
ENTITY general_path_closed_pocket
SUBTYPE OF (general_path_pocket);
feature_boundary: general_path;
END_ENTITY;
```

feature_boundary: The shape that describes the principal and secondary edges of the pocket. It is an enclosed area that has completely closed profile curves. The general_path entity specifies the volume required by a closed pocket. IF “x_+3” “<Tbl_no_borders>” “” <Tbl_no_borders> IF “x_-3” “</Tbl_no_borders>” “” </Tbl_no_borders>

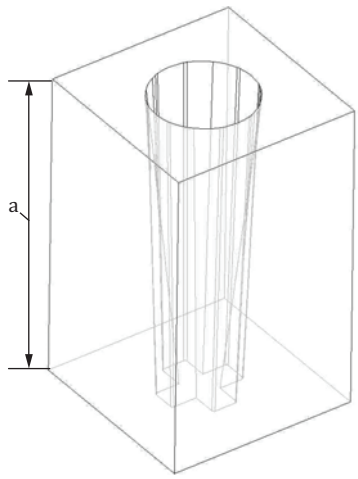

a depth

Figure 3 — General_path_closed_pocket

4.2.7 General_path_open_pocket

Derived from the class general_path_pocket class, a general_path_open_pocket is a general_path_pocket which is not a general_path_closed_pocket. The wall_boundary specifies the limit of the pocket from the open side.

```
ENTITY general_path_open_pocket
SUBTYPE OF (general_path_pocket);
open_boundary: general_path;
wall_boundary: OPTIONAL general_path;
END_ENTITY;
```

© ISO 2013 – All rights reserved

Documents
Document Sharing Hub
Full document details: BS ISO 14649-13:2013