BS ISO 14743:2020

BSI Standards Publication

Pneumatic fluid power — Push-in connectors for thermoplastic tubes

Documents
Document Sharing Hub

Full document details: BS ISO 14743:2020

National foreword

This British Standard is the UK implementation of ISO 14743:2020. It supersedes BS ISO 14743:2004, which is withdrawn.

The UK participation in its preparation was entrusted to Technical Committee MCE/18, Fluid power systems and components.

A list of organizations represented on this committee can be obtained on request to its secretary.

This publication does not purport to include all the necessary provisions of a contract. Users are responsible for its correct application.

© The British Standards Institution 2020
Published by BSI Standards Limited 2020

ISBN 978 0 580 51430 2

ICS 23.100.40

Compliance with a British Standard cannot confer immunity from legal obligations.

This British Standard was published under the authority of the Standards Policy and Strategy Committee on 31 January 2020.

Amendments/corrigenda issued since publication

Date	Text affected

Documents
Document Sharing Hub

Full document details: BS ISO 14743:2020

INTERNATIONAL STANDARD

ISO 14743

Second edition
2020-01

Pneumatic fluid power — Push-in connectors for thermoplastic tubes

Transmissions pneumatiques — Raccords instantanés pour tubes thermoplastiques

Reference number
ISO 14743:2020(E)

Documents
Document Sharing Hub
© ISO 2020

Full document details: BS ISO 14743:2020

COPYRIGHT PROTECTED DOCUMENT

© ISO 2020

All rights reserved. Unless otherwise specified, or required in the context of its implementation, no part of this publication may be reproduced or utilized otherwise in any form or by any means, electronic or mechanical, including photocopying, or posting on the internet or an intranet, without prior written permission. Permission can be requested from either ISO at the address below or ISO's member body in the country of the requester.

ISO copyright office
CP 401 • Ch. de Blandonnet 8
CH-1214 Vernier, Geneva
Phone: +41 22 749 01 11
Fax: +41 22 749 09 47
Email: copyright@iso.org
Website: www.iso.org

Published in Switzerland

© ISO 2020 – All rights reserved

Documents
Document Sharing Hub

Full document details: BS ISO 14743:2020

Contents

Page

Foreword ... **v**
Introduction ... **vi**
1 Scope ... **1**
2 Normative references ... **1**
3 Terms and definitions ... **1**
4 Working conditions ... **1**
5 Features ... **2**
6 OD of tube ... **2**
7 Design ... **2**
8 Marking ... **12**
9 Performance requirements and testing ... **12**
9.1 General ... 12
9.2 Test samples ... 12
9.3 Tensile test ... 13
9.3.1 Procedure ... 13
9.3.2 Pass/fail criteria ... 13
9.4 Pressure at maximum temperature test (for PA tubing only) ... 13
9.4.1 Description ... 13
9.4.2 Apparatus ... 13
9.4.3 Procedure ... 14
9.4.4 Pass/fail criteria ... 14
9.5 Proof and burst pressure test (for PA tubing only) ... 14
9.5.1 Description ... 14
9.5.2 Apparatus ... 14
9.5.3 Procedure ... 14
9.5.4 Pass/fail criteria ... 15
9.6 Connecting force test ... 15
9.6.1 Apparatus ... 15
9.6.2 Procedure ... 15
9.6.3 Pass/fail criteria ... 15
9.7 Disconnecting force test ... 16
9.7.1 Apparatus ... 16
9.7.2 Procedure ... 16
9.7.3 Pass/fail criteria ... 16
9.8 Leakage test (to be performed before disconnecting) ... 16
9.8.1 Description ... 16
9.8.2 Apparatus ... 16
9.8.3 Procedure ... 17
9.8.4 Pass/fail criteria ... 19
9.9 Cyclic endurance (impulse) test with vibration (for PA tubing only) ... 19
9.9.1 Description ... 19
9.9.2 Apparatus ... 19
9.9.3 Procedure ... 19
9.9.4 Pass/fail criteria ... 21
10 Designation ... **21**
11 Identification statement (reference to this document) ... **23**
Annex A (normative) **PA tubes for testing** ... **24**
Annex B (normative) **PU tubes for testing** ... **27**

Documents
Document Sharing Hub

© ISO 2020 – All rights reserved

Full document details: BS ISO 14743:2020

Bibliography **30**

© ISO 2020 – All rights reserved
Documents
Document Sharing Hub
Full document details: BS ISO 14743:2020

Foreword

ISO (the International Organization for Standardization) is a worldwide federation of national standards bodies (ISO member bodies). The work of preparing International Standards is normally carried out through ISO technical committees. Each member body interested in a subject for which a technical committee has been established has the right to be represented on that committee. International organizations, governmental and non-governmental, in liaison with ISO, also take part in the work. ISO collaborates closely with the International Electrotechnical Commission (IEC) on all matters of electrotechnical standardization.

The procedures used to develop this document and those intended for its further maintenance are described in the ISO/IEC Directives, Part 1. In particular, the different approval criteria needed for the different types of ISO documents should be noted. This document was drafted in accordance with the editorial rules of the ISO/IEC Directives, Part 2 (see www.iso.org/directives).

Attention is drawn to the possibility that some of the elements of this document may be the subject of patent rights. ISO shall not be held responsible for identifying any or all such patent rights. Details of any patent rights identified during the development of the document will be in the Introduction and/or on the ISO list of patent declarations received (see www.iso.org/patents).

Any trade name used in this document is information given for the convenience of users and does not constitute an endorsement.

For an explanation of the voluntary nature of standards, the meaning of ISO specific terms and expressions related to conformity assessment, as well as information about ISO's adherence to the World Trade Organization (WTO) principles in the Technical Barriers to Trade (TBT) see www.iso.org/iso/foreword.html.

This document was prepared by Technical Committee ISO/TC 131, *Fluid power systems*, Subcommittee SC 4, *Connectors and similar products and components*.

This second edition cancels and replaces the first edition (ISO 14743:2004), which has been technically revised. The main changes compared to the previous edition are as follows:

— new fitting size including inch dimensions has been added;

— new normative references have been added;

— updates on leakages performances and precisions have been added for cyclic endurance with vibration.

Any feedback or questions on this document should be directed to the user's national standards body. A complete listing of these bodies can be found at www.iso.org/members.html.

© ISO 2020 – All rights reserved

Documents
Document Sharing Hub
Full document details: BS ISO 14743:2020

Introduction

In pneumatic fluid power systems, power is transmitted and controlled through air under pressure within a circuit.

Components are connected through their ports by means of connectors (fittings) and conductors.

© ISO 2020 – All rights reserved
Documents
Document Sharing Hub
Full document details: BS ISO 14743:2020

Pneumatic fluid power — Push-in connectors for thermoplastic tubes

1 Scope

This document specifies the general requirements and test methods for the design and performance of push-in connectors for use with thermoplastic tubes with outside diameters (OD) from 3 mm to 16 mm including dimensions in inches.

This document is intended to establish uniform methods of testing complete push-in connector assemblies as used in pneumatic fluid power applications. It is not applicable to air braking systems.

2 Normative references

The following documents are referred to in the text in such a way that some or all of their content constitutes requirements of this document. For dated references, only the edition cited applies. For undated references, the latest edition of the referenced document (including any amendments) applies.

ISO 7-1, *Pipe threads where pressure-tight joints are made on the threads — Part 1: Dimensions, tolerances and designation*

ISO 4759-1, *Tolerances for fasteners — Part 1: Bolts, screws, studs and nuts — Product grades A, B and C*

ISO 5598, *Fluid power systems and components — Vocabulary*

ISO 8573-1:2010, *Compressed air — Part 1: Contaminants and purity classes*

ISO 10619-1, *Rubber and plastics hoses and tubing — Measurement of flexibility and stiffness — Part 1: Bending tests at ambient temperature*

ISO 16030, *Pneumatic fluid power — Connections — Ports and stud ends*

ANSI/ASME B1.1, *Unified Inch Screw Threads, (UN and UNR Thread Form)*

ANSI/ASME B1.20.1, *Pipe Threads, General Purpose, Inch*

ANSI/ASME B1.20.3, *Dryseal Pipe Threads (Inch)*

3 Terms and definitions

For the purposes of this document, the terms and definitions given in ISO 5598 apply.

ISO and IEC maintain terminological databases for use in standardization at the following addresses:

— IEC Electropedia: available at http://www.electropedia.org/

— ISO Online browsing platform: available at https://www.iso.org/obp

4 Working conditions

Push-in connectors shall provide connections from –0,09 MPa [–0,9 bar[1)]] to a working pressure of 1,6 MPa (16 bar) when used at temperatures between –20 °C and +80 °C.

1) 1 bar = 0,1 MPa = 105 Pa; 1 MPa = 1 N/mm^2

© ISO 2020 – All rights reserved

Documents
Document Sharing Hub
Full document details: BS ISO 14743:2020

The connector assembly shall meet the performance requirements given in Clause 9 with tubes specified in Annex A and Annex B.

When tubing with a lower rated pressure is used, the maximum working pressure of the tube and connector assembly shall be that of the tubing.

In road vehicles, it is necessary to exercise special care to ensure that these connectors are never used in an air braking system.

5 Features

Design is optional to the manufacturer. Two examples are shown in Figure 1.

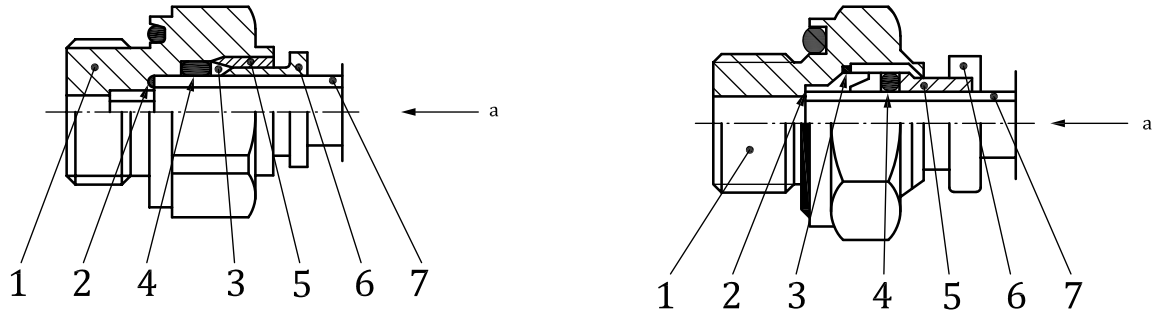

a) With sealing system located beyond the locking mechanism

b) With sealing system located in front of the locking mechanism

Key

1 body
2 tube stop
3 grab ring of tube
4 sealing of tube
5 releasing sleeve
6 removable button (optional)
7 tube
[a] Entry of the tube.

Figure 1 — Examples of design and description of the features of push-in connectors for use with thermoplastic tubes

6 OD of tube

The OD of the tube shall be chosen from the following range of sizes:

3 mm, 1/8 in (3,17 mm), 4 mm (5/32 in), 6 mm, 1/4 in (6,35 mm), 8 mm (5/16 in), 10 mm, 3/8 in (9,52 mm), 12 mm, 1/2 in (12,7 mm), 14 mm, and 16 mm (5/8 in).

7 Design

7.1 Push-in connector dimensions shown in Figures 2 to 7 shall conform to the dimensions given in Tables 1 to 7.

7.2 Hexagon tolerances across flats shall be in accordance with ISO 4759-1, Grade C. The minimum hexagon across-corner turn diameter of 1,092 times the normal across flats dimension shall be used.

7.3 For connectors with the thread M and G, thread and stud end shall be in accordance with ISO 16030.

For connector with the thread R, thread and stud end shall be in accordance with ISO 7-1.

© ISO 2020 – All rights reserved
Documents
Document Sharing Hub
Full document details: BS ISO 14743:2020

For connector with NPT thread, thread and stud end shall be in accordance with ANSI/ASME B1.20.1 and ANSI/ASME B1.20.3.

For connector with UNF thread, thread and stud end shall be in accordance with ANSI/ASME B1.1.

7.4 Details of contour shall be at the option of the manufacturer if the dimensions given in the Tables are maintained.

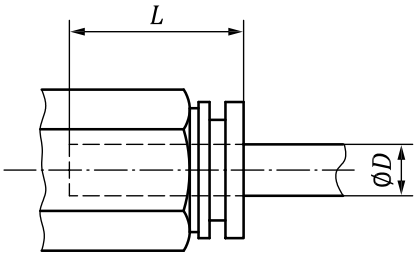

Key

D tube OD

L maximum insertion depth

Figure 2 — Tube insertion depth

Table 1 — Maximum tube insertion depth

Tube OD *D*		**Maximum insertion depth** *L*
in (mm)	mm	mm
1/8 (3,17)	3	16
5/32 (4)	4	18
1/4 (6,35)	6	19
5/16 (8)	8	20
3/8 (9,52)	10	24
1/2 (12,7)	12	33
	14	33
5/8 (16)	16	35

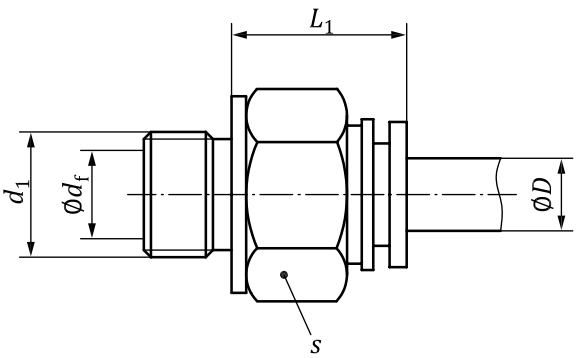

Key

D tube OD

d_1 thread outside diameter

s hexagon socket dimension

L_1 Stud adaptor height

d_f flow diameter

Figure 3 — Stud adaptor (SDS)

© ISO 2020 – All rights reserved

Documents
Document Sharing Hub
Full document details: BS ISO 14743:2020

Table 2 — SDS dimensions for tube OD in millimetres

Dimensions in millimetres

Tube OD D	d_1	L_1 max.	s[a] max.	Flow diameter d_f min.
3	M3	17	10	1,2
	M5	17	10	1,8
4	M3	22	12	1,2
	M5	22	12	2
	M7	22	12	2,5
	G1/8, R1/8, 1/8NPT	22	14	2,5
	G1/4, R1/4, 1/4NPT	22	19	2,5
	R3/8	22	22	3
6	M5	23	12	2,5
	M7	23	14	3
	M10	23	15	4
	M12	23	17	4
	G1/8, R1/8, 1/8NPT	23	14	4
	G1/4, R1/4, 1/4NPT	23	19	4
	G3/8, R3/8	23	22	4
	G1/2, R1/2	23	26	4
8	M10, M12, G1/8, R1/8, 1/8NPT	24	17	5
	G1/4, R1/4, 1/4NPT	24	19	6
	G3/8, R3/8, 3/8NPT	24	22	6
	G1/2, R1/2	24	26	6
10	G1/4	27	19	7
	G3/8, R3/8, 3/8NPT	27	22	8
	G1/2	27	26	8
	R1/8	27	19	5
	R1/4, 1/4NPT	27	22	7
	R1/2, 1/2NPT	27	26	8
12	G1/4, R1/4	30	22	7
	G3/8, R3/8, 3/8NPT	30	22	9
	G1/2, 1/2NPT	30	26	10
	R 1/2	30	26	9
14	G3/8, R3/8	32	25	9
	G1/2	32	26	11
	R 1/2	32	26	10
16	G3/8, R3/8, 3/8NPT	34	30	9
	G1/2, R1/2, 1/2NPT	34	30	12

[a] Hexagon socket or OD at the choice of the manufacturer.

© ISO 2020 – All rights reserved

Documents
Document Sharing Hub

Full document details: BS ISO 14743:2020